Piper™

Freedom of flight

™ The New Piper Aircraft, Inc.

AIRPLANE PARTS CATALOG

SARATOGA II HP

PA-32R-301
(SERIAL NUMBERS 3246001 AND UP)

SARATOGA II TC

PA-32R-301T
(SERIAL NUMBERS 3257001 AND UP)

CARD 1 OF 2

THE NEW PIPER AIRCRAFT, INC.

PART NUMBER: 761-880

REISSUED: JULY 10, 2004

Published by
Technical Publications

©The New Piper Aircraft, Inc.
2926 Piper Drive
Vero Beach, Florida 32960
U.S.A.

Member
General Aviation
Manufacturers Association

AEROFICHE EXPLANATION AND REVISION STATUS

The Parts Catalog information in this set of Aerofiche cards is arranged in accordance with general specifications of Aerofiche adopted by the General Aviation Manufacturer's Association.

Conversion of Aerofiche alpha/numeric code numbers:
First number is the Aerofiche card identifier.
Letter is the horizontal line reference per card.
Second number is the vertical line reference per card.
Example: 2J16 = Aerofiche card number two of given set, Grid location J16.

REVISIONS

The information compiled in this Aerofiche Parts Catalog is kept current by revisions distributed periodically. Each revision is a complete Aerofiche card replacement and supersedes Aerofiche cards of the same number in the set.

Revisions to this PA-32R-301 (serial numbers 3246001 and up) and PA-32R-301T (serial numbers 3257001 and up) Parts Catalog issued July 12, 1995 and reissued July 10, 2004 are as follows:

Effectivity	Publication Date	Aerofiche Card Effectivity
ORG 950712	April 22, 1996	1 and 2
PR 970627	June 27, 1997	1 and 2
PR 970801	August 1, 1997	1 and 2
PR 980331	March 31, 1998	1 and 2
PR 990601	June 1, 1999	1 and 2
PR 030310	March 10, 2003	1 and 2
CR 040710*	July 10, 2004	1 and 2

THIS PAGE INTENTIONALLY LEFT BLANK

INTRODUCTION

This illustrated Parts Catalog provides simple, positive identification of replacement parts for Model PA-32R-301 Saratoga II HP (serial numbers 3246001 and up) and the Model PA-32R-301T Saratoga II TC (serial numbers 3257001 and up), manufactured by the The New Piper Aircraft, Inc. of Vero Beach, Florida.

NOTE: DO NOT USE THIS CATALOG FOR RIGGING AND INSTALLATION PURPOSES.

1. The catalog is divided into fourteen major sections as follows:
   a. Section I to XIII inclusive contains all replacement parts for the complete airplane. Each section is subdivided and each division includes an illustration and a parts listing.
   b. Section XIV is the Miscellaneous Group. This group includes an illustration and parts list for the Placards and Exterior Stencils and a listing of the Optional Equipment Kits, Repair Kits and Special Tools.

2. The following is a brief explanation of the columns in the parts lists: (Refer to EXAMPLE below).
   a. The FIGURE AND ITEM NUMBER column indicates the illustration figure number and its part index number.
      EXAMPLE: (2-1), the 2 is the figure number and the 1 is the index number. The figure number appears only at the top of each parts list page.
   b. The PART NUMBER column contains the identifying number of the replacement part and this number must be shown on all parts orders.
   c. The NOMENCLATURE column indicates the part name. This name must be shown on all parts orders.
   d. The UNITS PER ASSY. (Number Required) column represents the total quantity of parts used per figure when the part is not indented and the quantity of parts used per assembly when the part is indented. The symbol AR listed in this column means As Required.
   e. The EFFECT FROM TO column indicates the part application by airplane serial number.

EXAMPLE

FIGURE ITEM	PART NUMBER	NOMENCLATURE	EFFECT TO FROM	UNITS PER ASSY
2 1	XXXXX-XXX	DOOR ASSEMBLY - Baggage compartment	XXXXXXX and up	X
2	XXXXX-XXX	. TUBE ASSEMBLY - Baggage door latch		X
3	XXXXX-XXX	. . CLEVIS - Door latch tube assembly		X
4	XXXXX-XXX	. . CLIP - Door latch tube assembly		X

In the nomenclature column, the next higher assembly relationship of items covered is shown by the degree of indention of each item and is indicated by an asterisk (*). One asterisk signifies one indention, two signifies two indentions, etc. The example listing above is interpreted as follows:

If the DOOR ASSEMBLY (not indented) is ordered, it will include the three items indented under the DOOR ASSEMBLY.

If the TUBE ASSEMBLY (indented one space) is ordered, it will include the two items indented under the TUBE ASSEMBLY.

If you want only a CLEVIS or CLIP, you order only that item.

3. Piper Aircraft will supply all attaching parts to its customers in any quantity. When purchasing the attaching parts such as nuts, bolts, washers, cotter pins, etc. from Piper Aircraft the customer or service center need only order the part(s) needed.
4. All items of Optional Equipment are contained in the parts list in their proper sequence and sections. These items were not marked optional, since they are fully identified by their descriptions.

HOW TO IDENTIFY A PART IF YOU KNOW WHAT IT LOOKS LIKE AND KNOW WHERE IT IS LOCATED

1. Refer to Figure 1 to determine the section number in which the part is used.
2. Refer to the Table of Contents and locate the section. Note the figure numbers that illustrate the various subgroups of this main section. Select the figure title you think might contain the part you wish to identify and proceed to the grid (page) specified. If you don't find the part on this illustration, try another figure in this group.
3. Refer to Figure and Index Number in the parts listing for description of the part.

HOW TO ORDER PARTS

When ordering parts for your Piper airplanes, please observe the following instructions:

1. Place your order with your local distributor or service center.
2. Specify the model and serial number of your airplane.
3. Specify Part Number, Name, Type and Quantity Required.
4. Specify the method of shipment — freight, express, parcel post, air express, air freight or air parcel post. Where the nature of the shipment requires it or when no instructions are given, we reserve the right to ship the most suitable way.
5. Request price and delivery information prior to order placement.

GENERAL INFORMATION

1. Shortages
   All orders are checked before leaving our Shipping Department. A packing slip is enclosed with the shipment. Claims for errors or shortages must be made within three days after receipt of orders.

2. Returned Goods
   No material should be returned without first securing written permission. Material sent in without notice will be held at the owner's risk for thirty days and will then be disposed of as we see fit. Transportation charges must be prepaid on returned goods or the shipment will be refused.

3. Transportation Liabilities
   The New Piper Aircraft, Inc. cannot be held liable for damages to parts in transit from the factory. If a shipment is received in a damaged condition, have the delivery man or transportation company make a notation of the damage and file your claim with the carrier. In case of concealed damage, do not attempt to remove the part from the shipping container, or try to repair the damage, call the carrier and have their claim agent inspect the damage before filing your claim with the carrier.

MODEL SERIAL NUMBER INFORMATION

The serial numbers of PA-32R-301 Saratoga II HP aircraft covered by this Parts Catalog are as follows:

MODEL YEAR	1995	3246001 thru 3246017
MODEL YEAR	1996	3246018 thru 3246059
MODEL YEAR	1997	3246060 thru 3246087
MODEL YEAR	1998	3246088 thru 3246125
MODEL YEAR	1999	3246126 thru 3246153
MODEL YEAR	2000	3246154 thru 3246165
MODEL YEAR	2000	3246166 thru 3246181
MODEL YEAR	2001	3246182 thru 3246203
MODEL YEAR	2002	3246204 thru 3246209
MODEL YEAR	2003	3246210 thru 3246217
MODEL YEAR	2004	3246218 and up

The serial numbers of PA-32R-301T Saratoga II TC aircraft covered by this Parts Catalog are as follows:

MODEL YEAR	1997	3257001 thru 3257027
MODEL YEAR	1998	3257028 thru 3257075
MODEL YEAR	1999	3257076 thru 3257123
MODEL YEAR	2000	3257124 thru 3257143
MODEL YEAR	2000	3257145 thru 3257155
MODEL YEAR	2000.5	3257144 thru 3257144
MODEL YEAR	2000.5	3257156 thru 3257198
MODEL YEAR	2001	3257199 thru 3257266
MODEL YEAR	2002	3257267 thru 3257296
MODEL YEAR	2003	3257297 thru 3257338
MODEL YEAR	2004	3257339 and up

SERIAL NUMBER EXPLANATION

The serial number on the Manufacturer's Identification Plate is based on a 3 set numbering system. See example below.

EXAMPLE

32 46 001

TYPE CERTIFICATE DESIGNATION

MODEL SEQUENCE NUMBER

MODEL CODE

46 = PA-32R-301 SARATOGA II HP
57 = PA-32R-301T SARATOGA II TC

STANDARD PAINT CHART

	MFG. NO.	PIPER PART NUMBER QUART	GALLON
EXTERIOR			
POLYURETHANE ENAMEL (Dupont Imron)			
Baja Yellow	H7850U	4175 461	1175 461
Juneau White	H7848U	4175 462	1175 462
Ocala Orange	H7857UM	4175 463	1175 463
Madrid Red	H7851UM	4175 464	1175 464
Bahama Blue	H7853U	4175 465	1175 465
Avocado	H7852U	4175 466	1175 466
Las Vegas Gold	5242U	4176 121	1176 121
Dakota Black	99U	4175 467	1175 467
Denver Brown	H7859U	4176 122	1176 122
Matador Red	H7858U	4175 468	1175 468
Royal Blue	H7856U	4175 469	1175 469
Hickory Brown	H7855U	4175 470	1175 470
Silver	4531U	4176 123	1176 123
Lime Green	H7854U	4175 460	1175 460
Sage Green	K7887U	4176 132	1176 132
Firethorn	K7888UW	4176 133	1176 133
Buckskin	K7890U	4176 135	1176 135
Dark Blue	K7891U	4176 136	1176 136
Platinum Gray	N7819U	4176 126	1176 126
Sandalwood Tan	N7818U	4176 127	1176 127
Dark Claret	K7886U	4176 131	1176 131
Burnished Gold	N8068U	4763 528	1763 528
Light Blue	K8149U	4763 529	1763 529
Dark Saddle	N8070U	4763 530	1763 530
Dark Green	N8071U	4763 531	1763 531
Saffron	K7889UH	4763 532	1763 532
Light Sandalwood	W8275	4763 533	1763 533
Light Platinum	W8274	4763 534	1763 534
Catalyst (Activator)	912S	4179 950	1179 950
Reducer	Y8485S	4179 145	1179 145
Retarder	8100S	4179 599	1179 599
Accelerator	189S	4179 951	
POLYURETHANE PRIMER (Dupont Imron)			
Wash Primer	B9287	4170 766	1179 766
Wash Primer Thinner	K1733	4179 452	1179 452
Acid Thinner	B9289	4179 403	1179 403
INTERIOR			
INSTRUMENT PANEL			
Cadet Dark Grey			170 902
Grey II			170 907

NOTE: SEE SERVICE SPARES LETTER 407 FOR AVAILABILITY OF COLOR PAINT FOR THERMOPLASTIC INTERIOR PANELS.

TABLE OF CONTENTS

FIGURE NUMBER	FIGURE TITLE	GRID NUMBER
1	Complete Airplane	1A12, 2A12
	SECTION I WING GROUP	
2	Wing Installation.	1A16
3	Wing Leading Edge Assembly	1A22
4	Wing Trailing Edge Assembly	1B2
5	Aileron Assembly	1B6
6	Flap Assembly	1B10
	SECTION II FUSELAGE GROUP	
7	Fuselage Assembly - Complete	1B14
8	Fuselage Upper Forward Cockpit Assembly	1B18
9	Fuselage Upper Center Cockpit Assembly	1B22
10	Fuselage Upper Aft Cockpit Assembly	1C2
11	Fuselage Lower Forward Cockpit Assembly	1C4
12	Fuselage Lower Aft Cockpit Assembly	1C8
13	Fuselage Aft Section	1C12
14	Fuselage Forward Cabin Door	1C16
15	Fuselage Aft Cabin Door	1C20
16	Fuselage Forward Baggage Door	1C24
17	Fuselage Aft Cargo Door	1D2
18	Fuselage Enclosure Installation	1D6
	SECTION III TAIL SURFACES GROUP	
19	Tail Surfaces Installation	1D12
20	Stabilator Assembly	1D16
21	Fin Assembly	1D18
22	Rudder Assembly	1D20
	SECTION IV LANDING GEAR GROUP	
23	Nose Gear Installation	1E2
24	Nose Gear Assembly	1E6
25	Nose Wheel Assembly	1E10
26	Main Gear Installation	1E12
27	Main Gear Assembly	1E16
28	Main Wheel Assembly	1E20
29	Brake Assembly	1E22
30	Landing Gear Door Installation	1E24
31	Hand Brake Installation	1F4
32	Toe Brake Installation	1F8
33	Toe Brake Master Cylinder Assembly	1F12

TABLE OF CONTENTS

FIGURE NUMBER	FIGURE TITLE	GRID NUMBER
	SECTION V CABIN EQUIPMENT GROUP	
34	Cabin Finishing Installation	1F16
35	Window Shades and Reveals Installation	1F20
36	Carpet Installation	1F24
37	Headliner and Forward Fresh Air Duct Installation	1G2
38	Forward Seats Installation	1G6
39	Rear Seats Installation	1G10
40	Aft Facing Seat Assembly - Center	1G14
41	Club Seating Installation	1G16
41A	Entertainment Console (Serial numbers 3246088 and up; 3257001 and up)	1G20
	SECTION VI INSTRUMENTS GROUP	
42	Instrument Panel Installation (Serial numbers 3246001 thru 3246017)	1H4
42A	Instrument Panel Installation (Serial numbers 3246018 thru 3246087)	1H8
42B	Instrument Panel Installation (Serial numbers 3246088 and up)	1H12
42C	Instrument Panel Installation (Serial numbers 3257001 and up)	1H16
43	Vacuum System Installation	1H20
43A	Vacuum System Installation (Sheet 1 of 3)	1H22
	Vacuum System Installation (Sheet 2 of 3)	1H23
	Vacuum System Installation (Sheet 3 of 3)	1H24
44	Standby Vacuum System Installation	1I4
45	Pitot Static System Installation (Sheet 1 of 2)	1I6
	Pitot Statis System Installation (Sheet 2 of 2)	1I7
45A	Pitot Static System Installation (Sheet 1 of 2)	1I10
	Pitot Static System Installation (Sheet 2 of 2)	1I11
	SECTION VII POWER PLANT GROUP	
46	Power Plant Installation (PA-32R-301)	1J2
46A	Power Plant Installation (PA-32R-301T)	1J8
47	Engine Exhaust System Installation	1J14
48	Engine Baffle Installation	1J16
49	Engine Cowl Assembly	1J20
50	Three Blade Propeller Assembly	1J24
51	Engine Controls Installation	1K2
	SECTION VIII FUEL SYSTEM GROUP	
52	Forward Fuel System Installation	1L2
53	Aft Fuel System Installation	1L4
54	Fuel Tank Assemblies	1L8
	SECTION IX CONTROL SYSTEM GROUP	
55	Aileron Control Installation	2A16
56	Flap Control Installation	2A20
57	Stabilator Control Installation	2A24
58	Stabilator Trim Installation	2B2
59	Rudder Control Installation	2B6
60	Rudder Trim Mechanism Installation	2B8
61	Control Wheel Installation	2B10
62	Rudder Pedal Installation	2B14

TABLE OF CONTENTS

FIGURE NUMBER	FIGURE TITLE	GRID NUMBER
	SECTION X HYDRAULIC SYSTEM GROUP	
63	Hydraulic System Installation	2B18
	SECTION XI ENVIRONMENTAL GROUP	
64	Cabin Heat and Defroster System	2C2
64A	Cabin Heat and Ventilation (Serial numbers 3257001 and up)	2C6
65	Aft Fresh Air Duct Installation	2C8
66	Air Conditioning Compressor, Refrigerant Lines, Alternator Installation	2C12
66A	Air Conditioning Compressor (Serial numbers 3246088 and up and 3257001 and up	2C16
67	Air Conditioning Duct and Evaporator Installation	2C18
68	Air Conditioning Condenser Installation	2C22
68A	Oxygen System Installation (Serial Numbers 3257001 and up)	2D2
	SECTION XII ELECTRICAL SYSTEM GROUP	
69	Electrical System Installation	2E2
70	Instrument Panel Electrical Installation	2E10
71	Switch Panel Assembly (Serial numbers 3246001 thru 3246017)	2E14
71A	Switch Panel Assemblies (Serial numbers 3246018 and up; 3257001 and up)	2E16
72	Annunciator Panel Assembly	2E20
73	Circuit Breaker Panel Assembly (Serial numbers 3246001 thru 3246087)	2E24
73A	Circuit Breaker Panel Assembly (Serial numbers 3246088 and up; 3257001 and up)	2F4
74	Air Conditioning Electrical Installation	2F8
75	Battery Box Installation (Serial numbers 3246001 thru 3246017)	2F12
75A	Battery Box Installation (Serial numbers 3246018 and up; 3257001 and up)	2F14
75B	Master Electrical Panel (Serial numbers 3246088 and up; 3257001 and up)	2F18
76	External Power Supply Installation	2F20
78	Strobe Lights Installation	2F24
	SECTION XIII ELECTRONICS GROUP	
79	Emergency Locator Transmitter (ELT 110-4) Installation	2H2
80	Radio, Antenna System and Static Wicks Installation	2H4
	Avionics Installation Drawings	2H7
	SECTION XIV MISCELLANEOUS GROUP	
81	Placards Installation	2I2
	Piper Service and Optional Kits	2I5
	NUMERICAL INDEX	2J1

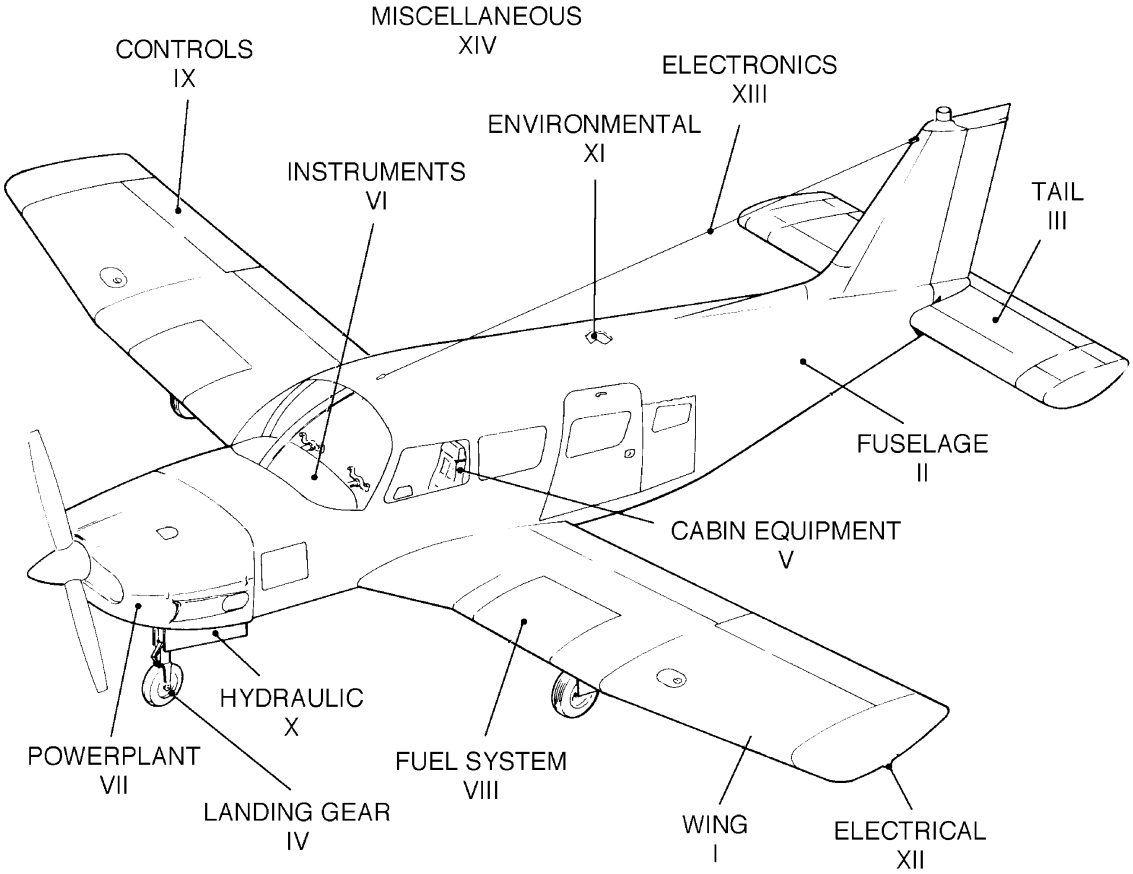

Figure 1. Complete Airplane

SERVICE BULLETINS INCORPORATED

990 - Fig. 38,39
993 - Opt Kits
996 - Fig. 9
1006 - Fig. 4
1009 - Fig. 46
1011 - Fig. 5
1015 - Fig. 69
1018 - Opt Kits
1020 - Fig. 79
1022 - Fig. 46
1023 - Fig. 26
1024 - Fig. 55
1025 - Fig. 46A
1026 - Fig. 43,43A
1028 - Fig. 5
1030 - Opt Kits
1031 - Fig. 42B,42C
1041 - Fig. 43
1049 - Fig. 48
Opt Kits
1081 - Fig. 42B,42C
1083 - Opt Kits
1092 - Fig. 46
1139 - Fig. 61
1141 - Fig. 19

SERVICE LETTERS INCORPORATED

1032 - Fig. 54
1033 - Fig. 66
1043 - Opt Kits
1049 - Fig. 69

(These Service Bulletins and Letters show the base number and may have later revisions than shown, Ex: A, B, Etc. Always check for the latest revision)

THIS PAGE INTENTIONALLY LEFT BLANK

SECTION I
WING GROUP

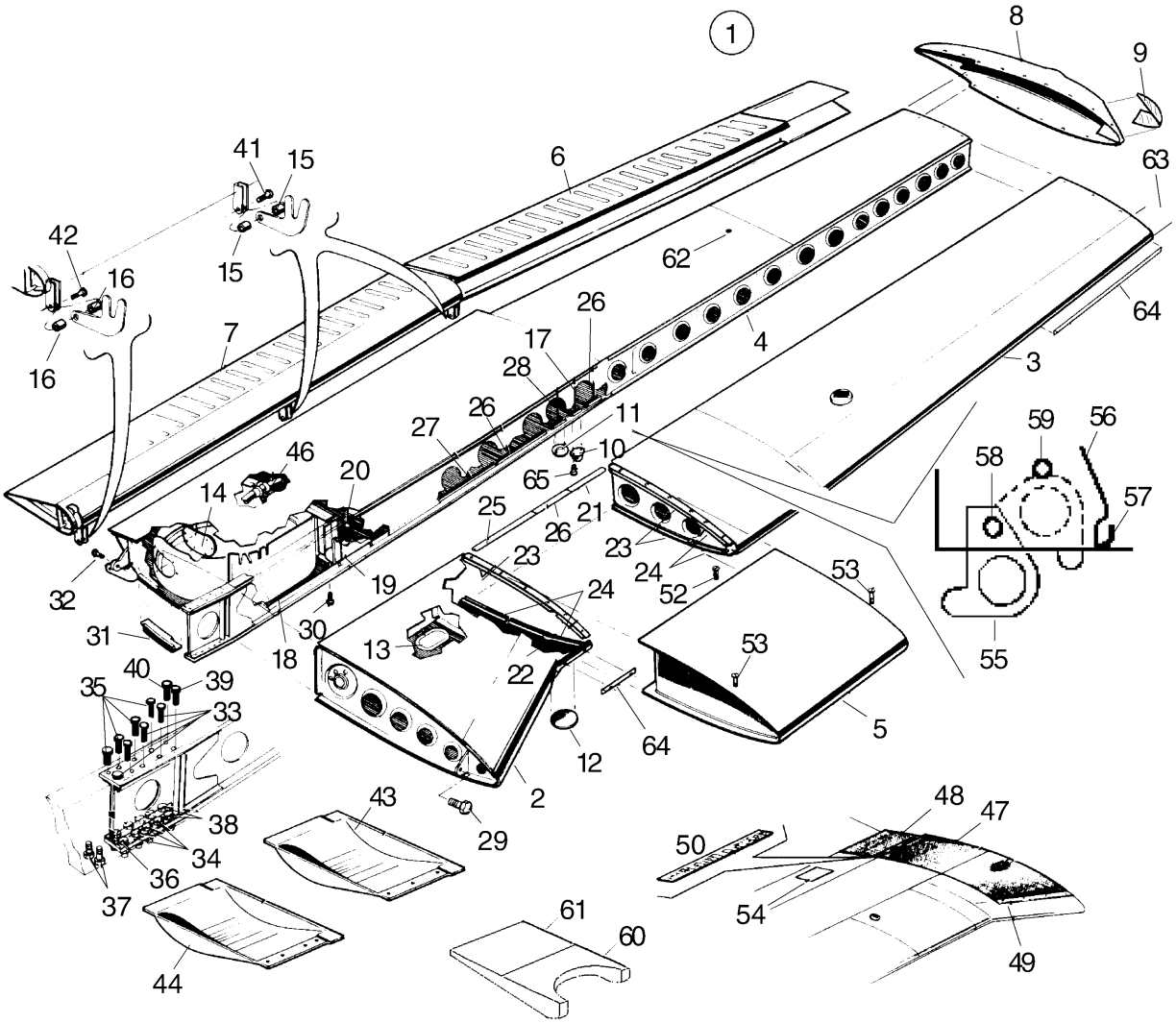

Figure 2. Wing Installation

FIGURE ITEM	PART NUMBER	NOMENCLATURE	EFFECT FROM TO	UNITS PER ASSY
2	38500 (BP)	DRAWING - Wing Installation		
	83363 (N)	DRAWING - Exterior Details		
1	38500-014	WING ASSY - Left		1
		(This assembly includes brake lines, pitot tubes		
		(in left wing only), hydraulic and cable guard tubes)		
-1A	38500-015	WING ASSY - Right		
		(This assembly includes brake lines, pitot tubes		1
		(in left wing only), hydraulic and cable guard tubes)		
2	38500-014	. LEADING EDGE ASSY - Wing inboard, left		RF
		(See Figure 3 for component parts)		
-2A	38500-015	. LEADING EDGE ASSY - Wing inboard, right		RF
		(See Figure 3 for component parts)		
3	38500-014	. LEADING EDGE ASSY - Wing outboard, left		RF
		(See Figure 3 for component parts)		
-3A	38500-015	. LEADING EDGE ASSY - Wing outboard, right		RF
		(See Figure 3 for component parts)		
4	38500-014	. TRAILING EDGE ASSY - Wing aft section, left		RF
		(See Figure 4 for component parts. Serial number		
		of aircraft must be supplied when ordering this part)		
-4A	38500-015	. TRAILING EDGE ASSY - Wing aft section, right		RF
		(See Figure 4 for component parts. Serial number		
		of aircraft must be supplied when ordering this part)		
5	38488-008	TANK ASSY - Fuel, left		1
		(See Figure 54 for component parts)		
-5A	38488-009	TANK ASSY - Fuel, right		1
		(See Figure 54 for component parts)		
6	38650-004	AILERON ASSY - Left		1
		(See Figure 5 for component parts)		
-6A	38650-005	AILERON ASSY - Right		1
		(See Figure 5 for component parts)		
7	65591-000	FLAP ASSY - Left		1
		(See Figure 6 for component parts)		
-7A	65590-001	FLAP ASSY - Right		1
		(See Figure 6 for component parts)		
8	36739-022	TIP ASSY - Left	3246001 thru 3246017	1
-8A	36739-023	TIP ASSY - Right	3246001 thru 3246017	1
-8B	85402-018	TIP ASSY - Right	3246018 and up	1
-8C	85402-018	TIP ASSY - Right	3257001 and up	1
-8D	85402-019	TIP ASSY - Left	3246018 and up	1
-8E	85402-019	TIP ASSY - Left	3257001 and up	1
9	36739-028	. LENS - Wing tip, left	3246001 thru 3246017	1
-9A	36739-029	. LENS - Wing tip, right	3246001 thru 3246017	1
-9B	85402-006	. LENS - Wing tip, left	3246018 and up	1
-9C	85402-006	. LENS - Wing tip, left	3257001 and up	1
-9D	85402-007	. LENS - Wing tip, right	3246018 and up	1
-9E	85402-007	. LENS - Wing tip, right	3257001 and up	1
10	85287-002	RETRACT - Tie down		2
-10A	410-046	. SCREW - (MS24694-S59)		2
11	35725-002	PAD - Jack		2
-11A	415-314	. SCREW - (MS27039-0819)		2
12	38118-005	COVER - Inspection		2
-12A	415-533	. SCREW - (MS35206-243)		8
13	38572-002	COVER - Inspection		9

-Item not illustrated

When ordering, always specify Part Number, Description, and Serial Number of Aircraft

FIGURE ITEM	PART NUMBER	NOMENCLATURE	EFFECT FROM TO	UNITS PER ASSY
2-				
-13A	414-515	. SCREW - (MS24693-S48)		40
-13B	100897-011	COVER - OAT probe (Made from 38572-002 to accomdate OAT probe installation - See Figure 69 for probe installation)	3246088 and up 3257001 and up	1
-13C	414-761	SCREW - (MS24693-S48)	3246088 and up 3257001 and up	8
14	96625-000	COVER - Inspection		2
15	63900-019	BUSHING - Flap hinge, center and outboard		8
16	63900-020	BUSHING - Flap hinge, inboard		4
17	66529-000	CHANNEL - Gang		2
18	67164-000	COVER - Cylinder access, left		1
-18A	67164-001	COVER - Cylinder access, right		1
19	95643-008	BRACKET ASSY - Main gear truss, left (See Figure 26 for component parts)		1
-19A	95643-009	BRACKET ASSY - Main gear truss, right (See Figure 26 for component parts)		1
20	460-801	FITTING - Lubricator, 90 degrees (MS15001-4) (See Figure 26-36)		RF
21	35630-016	CHANNEL - Gang		2
22	96927-000	CHANNEL - Gang		2
23	406-942	CHANNEL - Gang		6
24	96926-000	CHANNEL - Gang		8
25	477-861	CHANNEL - Gang		2
26	38676-002	CHANNEL - Gang		6
27	38565-002	CHANNEL - Gang		2
28	406-935	CHANNEL - Gang		2
29	402-680	BOLT - (NAS1104-17)		2
-29A	690-611	WASHER - (NAS1149F0463P)(under nut)		2
-29B	690-613	WASHER - (NAS1149F0432P)(under head)		2
-29C	406-637	NUT - (KAY H10-4)		2
30	486-291	SCREW - (NAS517-4-9)		4
-30A	690-611	WASHER - (NAS1149F0463P)		8
-30B	404-530	NUT - (MS21042-4)		4
31	67723-000	PLATE ASSY - Aft wing access, left		1
-31A	67723-001	PLATE ASSY - Aft wing access, right		1
32	402-915	BOLT - (NAS464P6LA6)		2
-32A	690-620	WASHER - (NAS1149F0632P)(under head)		2
-32B	690-629	WASHER - (NAS1149F0663P)		AR
-32C	690-620	WASHER - (NAS1149F0632P)		AR
-32D	404-532	NUT - (MS21042-6)		2
33	402-908	BOLT - (NAS464P6LA16)		8
-33A	620-629	WASHER - (NAS1149F0663P)		16
-33B	404-532	NUT - (MS21042- 6)		8
34	402-910	BOLT - (NAS464P6LA20)		12
-34A	690-629	WASHER - (NAS1149F0663P)(under nut)		12
-34B	690-620	WASHER - (NAS1149F0632P)(under head)		12
-34C	404-532	NUT - (MS21042-6)		12
35	402-906	BOLT - (NAS464P6LA14)		8
-35A	690-629	WASHER - (NAS1149F0663P)(under head)		8
-35B	494-228	WASHER - (KAY K19301-6)(under nut)		8
-35C	406-527	NUT - (KAY H19300-6)		8
36	402-911	BOLT - (NAS464P6LA21)		4
-36A	690-620	WASHER - (NAS1149F0632P)(under head)		4
-36B	96352-003	WASHER - (under nut)		4

-Item not illustrated

When ordering, always specify Part Number, Description, and Serial Number of Aircraft

FIGURE ITEM	PART NUMBER	NOMENCLATURE	EFFECT FROM TO	UNITS PER ASSY
2-				
-36C	404-532	NUT - (MS21042-6)		4
37	402-904	BOLT - (NAS464P5LA21)		4
-37A	690-619	WASHER - (NAS1149F0532P)(under head)		4
-37B	96352-002	WASHER - (under nut)		4
-37C	404-531	NUT - (MS21042-5)		4
38	402-903	BOLT - (NAS464P5LA20)		4
-38A	690-619	WASHER - (NAS1149F0532P)(under head)		4
-38B	690-628	WASHER - (NAS1149F0563P)(under nut)		4
-38C	404-531	NUT - (MS21042-5)		4
39	402-909	BOLT - (NAS464P6LA17)		2
-39A	690-629	WASHER - (NAS1149F0663P)		4
-39B	404-532	NUT - (MS21042-6)		2
40	402-907	BOLT - (NAS464P6LA15)		2
-40A	690-620	WASHER - (NAS1149F0632P)(under head)		2
-40B	494-228	WASHER - (KAY K19301-6)(under nut)		2
-40C	406-527	NUT - (KAY H19300-6)		2
41	401-270	BOLT - (AN3-11A)		4
-41A	690-612	WASHER - (NAS1149F00363P)		4
-41B	404-887	NUT - (MS21042-3)		4
42	400-444	BOLT - (AN3-13A)		2
-42A	690-612	WASHER - (NAS1149F0363P)		2
-42B	404-887	NUT - (MS21042-3)		2
43	63942-000	COVER - Wing bolt, left		1
-43A	63942-001	COVER - Wing bolt, right		1
44	85290-002	COVER - Wing bolt, left		1
-44A	85290-003	COVER - Wing bolt, right		1
-45	85289-002	CLIP - Bolt cover, left (use on 85290-002)		1
-45A	85289-003	CLIP - Bolt cover, right (use on 85290-003)		1
46	63904-024	HOSE		4
47	79174-005	. WING WALK - Safety, wing, right, complete		1
48	79174-004	. WING WALK - Safety, flap		1
49	69736-002	. RETAINER - Wing walk		1
50	35664-002	PLACARD - Flap step warning (See Figure 81)		RF
52	410-010	SCREW - (MS24694-S14)		86
53	410-240	SCREW - (MS24694-S5)		78
54	87341-004	PLACARD - No step (See Figure 81)		RF
-54A	100700-002	PLACARD - No step (See Figure 81)		RF
-54B	100700-003	PLACARD - No step (See Figure 81)		RF
55	89643-005	RING - Tie down		1
56	85287-004	BRACKET - Tie down, left		1
-56A	85287-005	BRACKET - Tie down, right		1
57	85287-006	DOUBLER		1
58	89643-009	SPRING		1
-58A	400-004	BOLT - (AN4-7A)		1
-58B	690-613	WASHER - (NAS1149F0432P)		1
-58C	40559-028	WASHER		1
-58D	89643-007	SPACER		1
-58E	406-615	NUTPLATE - (NAS682-A4)		1
59	400-441	BOLT - (AN3-7A)		1
-59A	690-609	WASHER - (NAS1149F0332P)		1
-59B	89643-007	SPACER		1
-59C	406-805	NUTPLATE - (NAS680-A3)		1
60	85197-004	FAIRING - Main gear		1
61	85197-003	FAIRING - Main gear		1

-Item not illustrated

When ordering, always specify Part Number, Description, and Serial Number of Aircraft

FIGURE ITEM	PART NUMBER	NOMENCLATURE	EFFECT FROM TO	UNITS PER ASSY
2-				
62	453-966	BUTTON - Plug (UCCHS48172-K2915)		2
63	36806-006	SHIELD - Left	3246018 and up	1
-63A	36806-006	SHIELD - Left	3257001 and up	1
-63B	36806-007	SHIELD - Right	3246018 and up	1
-63C	36806-007	SHIELD - Right	3257001 and up	
-63D	415-381	SCREW - (MS51957-46)	3246018 and up	2
-63E	415-381	SCREW - (MS51957-46)	3257001 and up	2
64	98700-002	STRIP - Stall, left, inboard and outboard		2
-64A	98700-004	STRIP - Stall, right, inboard		1
-64B	98700-005	STRIP - Stall, right, outboard		1
65	410-049	SCREW - (MS24694-S62)		4

-Item not illustrated

When ordering, always specify Part Number, Description, and Serial Number of Aircraft

THIS PAGE INTENTIONALLY LEFT BLANK

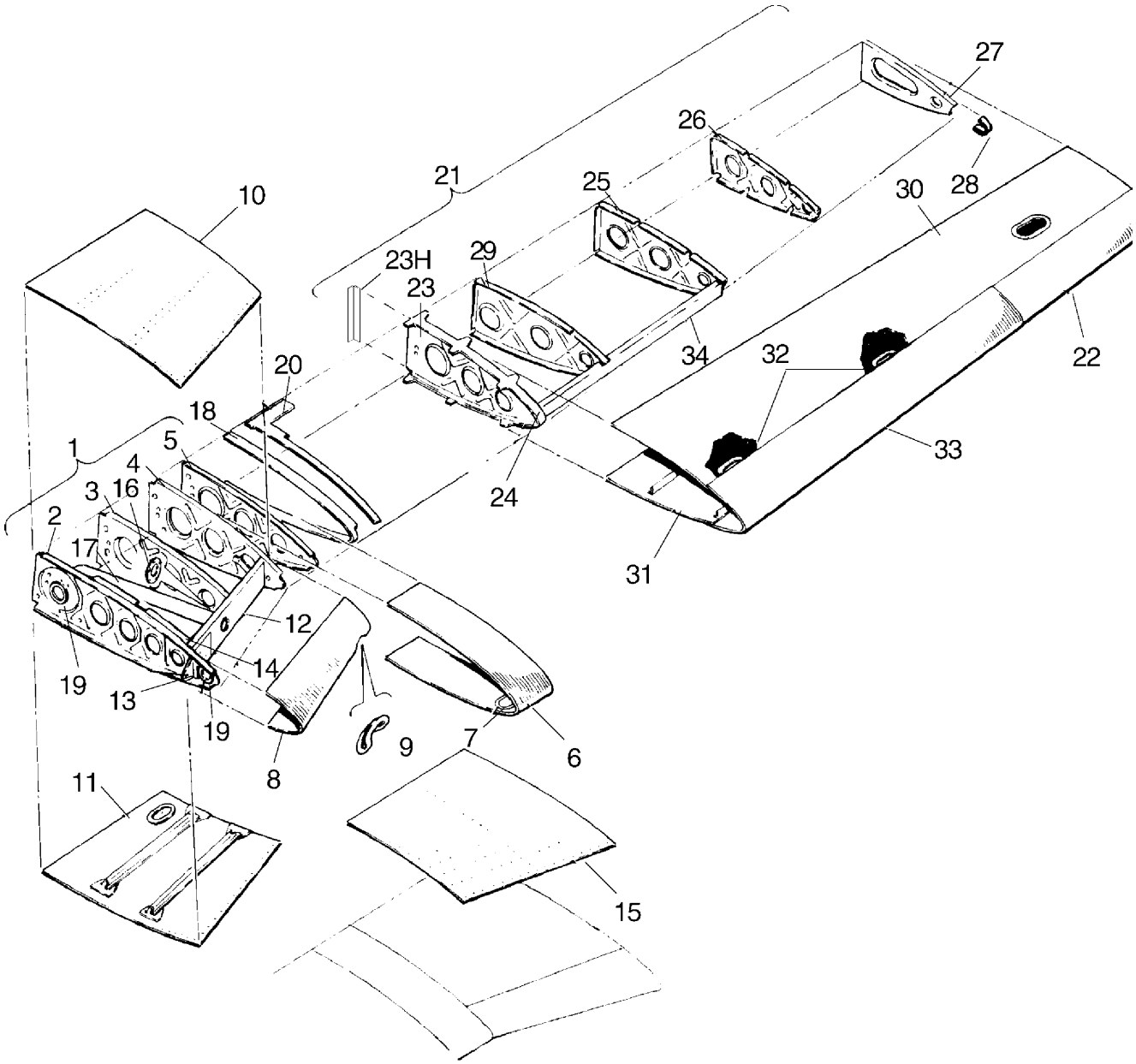

Figure 3. Wing Leading Edge Assembly

FIGURE ITEM	PART NUMBER	NOMENCLATURE	EFFECT FROM TO	UNITS PER ASSY
3	38500 (BP)	DRAWING - Wing Installation		
1	38500-014	LEADING EDGE ASSY - Wing inboard, left		RF
-1A	38500-015	LEADING EDGE ASSY - Wing inboard, right		RF
2	95639-004	. RIB - Wing nose, root, left		1
-2A	95639-005	. RIB - Wing nose, root, right		1
3	38549-002	. RIB ASSY - Wing nose, Sta. 36.92, left		1
-3A	38549-003	. RIB ASSY - Wing nose, Sta. 36.92, right		1
-3B	406-415	. NUT - (NAS395-16-1)		1
-3C	599-495	. NUT - (C17938-1 (PUR) Tinnerman)		2
4	38520-002	. RIB - Wing nose, Sta. 49.25, left		1
-4A	38520-003	. RIB - Wing nose, Sta. 49.25, right		1
-4B	402-899	. NUT - (NAS464P5LA9)		3
5	38497-002	. RiB - Wing nose, Sta. 57.00, left		1
-5A	38497-003	. RIB - Wing nose, Sta. 57.00, right		1
6	38118-006	. SKIN ASSY - Inboard wing		1
7	38118-003	. . DOUBLER ASSY - Leading edge wing		1
8	62085-002	. SKIN ASSY - Leading edge, left		1
-8A	62085-003	. SKIN ASSY - Leading edge, right		1
9	68111-000	. . DOUBLER - Air inlet		1
10	62087-004	. SKIN ASSY - Top inboard root, left		1
11	38568-002	. SKIN ASSY - Bottom inboard root, left		1
-11A	38568-003	. SKIN ASSY - Bottom inboard root, right		1
12	66623-000	. SPAR - Leading edge, inboard, left		1
-12A	66623-001	. SPAR - Leading edge, inboard, right		1
-12B	63976-060	. GROMMET		
13	66761-002	. FITTING ASSY - Forward spar, left		1
-13A	66761-003	. FITTING ASSY - Forward spar, right		1
-13B	404-561	. NUT - (MS21045-4)		2
14	38211-000	. RIB - Half, wing root, left		1
-14A	38211-001	. RIB - Half, wing root, right		1
15	62061-005	. WING WALK - Forward, right		1
16	66621-000	. DOUBLER - Forward spar		1
17	66620-000	. TUBE ASSY - Air duct		1
18	62091-002	. STRAP - Fuel tank attachment		1
19	68119-000	. GASKET - Airduct		2
20	96844-003	. SPACER - Wing rib, Sta. 57.00		1
21	38500-014	LEADING EDGE ASSY - Wing outboard, left		RF
-21A	38500-015	LEADING EDGE ASSY - Wing outboard, right		RF
22	38523-004	. SKIN - Forward, left		1
-22A	38523-003	. SKIN - Forward, right		1
23	38496-002	. RIB ASSY - Wing nose, Sta. 106.19, left	3246001 thru 3246153	1
-23A	38496-002	. RIB ASSY - Wing nose, Sta. 106.19, left	3257001 thru 3257123	1
-23B	38496-003	. RIB ASSY - Wing nose, Sta. 106.19, right	3246001 thru 3246153	1
-23C	38496-003	. RIB ASSY - Wing nose, Sta. 106.19, right	3257001 thru 3257123	1
-23D	38496-009	. RIB ASSY - Wing nose, Sta. 106.19, left	3246154 and up	1
-23E	38496-009	. RIB ASSY - Wing nose, Sta. 106.19, left	3257124 and up	1
-23F	38496-010	. RIB ASSY - Wing nose, Sta. 106.19, right	3246154 and up	1
-23G	38496-010	. RIB ASSY - Wing nose, Sta. 106.19, right	3257124 and up	1
23H	38498-008	ANGLE	3246154 and up	1
-23J	38498-008	. ANGLE	3257124 and up	1
24	35733-004	. . STRAP - Fuel tank attachment, left		1
-24A	35733-005	. . STRAP - Fuel tank attachment, right		1
25	38483-002	. RIB - Wing nose, Sta. 148.60, left		1

-Item not illustrated

When ordering, always specify Part Number, Description, and Serial Number of Aircraft

FIGURE ITEM	PART NUMBER	NOMENCLATURE	EFFECT FROM TO	UNITS PER ASSY
3-				
-25A	38483-003	. RIB - Wing nose, Sta. 148.60, right		1
26	35166-000	. RIB - Wing nose, Sta. 174, left		1
-26A	35166-001	. RIB - Wing nose, Sta. 174, right		1
27	86545-002	. RIB ASSY - Wing nose, Sta. 206.70, left		1
-27A	86545-003	. RIB ASSY - Wing nose, Sta. 206.70, right		1
28	86545-006	. . STRAP - Skin attachment, Sta. 206.70, left		1
-28A	86545-007	. . STRAP - Skin attachment, Sta. 206.70, right		1
29	38484-004	. RIB - Wing nose, Sta. 117.50, left		1
-29A	38484-005	. RIB - Wing nose, Sta. 117.50, right		1
30	38528-006	. SKIN - Aft, top		2
31	38528-004	. SKIN ASSY - Aft, bottom, left		1
-31A	38528-005	. SKIN ASSY - Aft, bottom, right		1
32	38571-002	. . DOUBLER - Cover plate attachment		2
33	38526-002	. SKIN ASSY - Forward, left		1
-33A	38526-003	. SKIN ASSY - Forward, right		1
34	38502-002	. . SPAR - Leading edge, Sta. 106.19 to Sta. 148.60, left		1
-34A	38502-003	. . SPAR - Leading edge, Sta. 106.19 to Sta. 148.60, right		1

-Item not illustrated

When ordering, always specify Part Number, Description, and Serial Number of Aircraft

THIS PAGE INTENTIONALLY LEFT BLANK

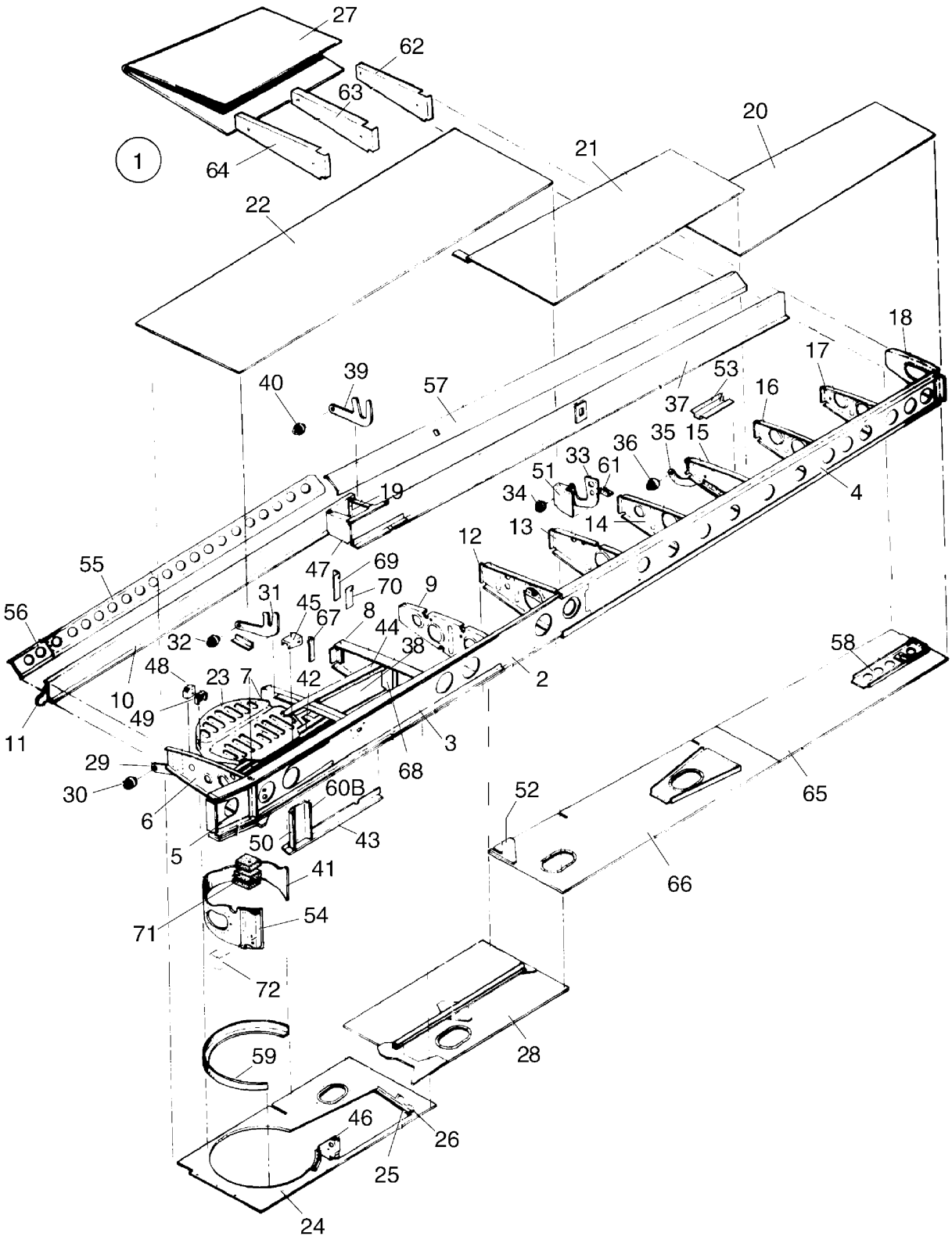

Figure 4. Wing Trailing Edge Assembly

FIGURE ITEM	PART NUMBER	NOMENCLATURE	EFFECT FROM TO	UNITS PER ASSY
4	38500 (BP)	DRAWING - Wing Installation		
1	38500-014	TRAILING EDGE ASSY - Wing aft section, left (Serial number of aircraft must be supplied when ordering this part)		RF
-1A	38500-015	TRAILING EDGE ASSY - Wing aft section, right (Serial number of aircraft must be supplied when ordering this part)		RF
2	38493-002	. SPAR ASSY - Wing main, left (Refer to Piper Service Bulletin #1006 - Latest Revision for serial numbers 3246001 and up; 3257001 and up)		1
-2A	38493-003	. SPAR ASSY - Wing main, right (Refer to Piper Service Bulletin #1006 - Latest Revision for serial numbers 3246001 and up; 3257001 and up)		1
3	38499-002	. . SPAR ASSY - Main inboard, left		1
-3A	38499-003	. . SPAR ASSY - Main inboard, right		1
4	35168-012	. . SPAR ASSY - Main outboard, left		1
-4A	35168-013	. . SPAR ASSY - Main outboard, right		1
5	38574-003	. . DOUBLER ASSY - Main spar root, forward and aft		2
6	95636-000	. RIB - Aft, Sta. 24.24, left		1
-6A	95636-001	. RIB - Aft, Sta. 24.24, right		1
7	78475-006	. RIB - Aft, Sta. 49.25, left		1
-7A	78475-007	. RIB - Aft, Sta. 49.25, right		1
8	38210-000	. RIB - Aft, Sta. 69.24, left		1
-8A	38210-001	. RIB - Aft, Sta. 69.24, right		1
9	66598-000	. RIB - Aft, Sta. 86.03, left		1
-9A	66598-001	. RIB - Aft, Sta. 86.03, right		1
10	35174-000	. SPAR ASSY- Wing aft, inboard, left		1
-10A	35174-001	. SPAR ASSY - Wing aft, inboard, right		1
11	66762-000	. . PLATE - Aft spar		1
12	86538-002	. RIB ASSY - Aft, Sta. 106.19, left		1
-12A	86538-003	. RIB ASSY - Aft, Sta. 106.19, right		1
13	86529-002	. RIB - Aft, Sta. 123.15, left		1
-13A	86529-003	. RIB - Aft, Sta. 123.15, right		1
14	86530-002	. RIB - Aft, Sta. 140.09, left		1
-14A	86530-003	. RIB - Aft, Sta. 140.09, right		1
15	86532-004	. RIB - Aft, Sta. 157.00, left		1
-15A	86532-005	. RIB - Aft, Sta. 157.00, right		1
16	86533-002	. RIB - Aft, Sta. 174.00, left		1
-16A	86533-003	. RIB - Aft, Sta. 174.00, right		1
17	86534-002	. RIB - Aft, Sta. 190 90, left		1
-17A	86534-003	. RIB - Aft, Sta. 190.90, right		1
18	86535-002	. RIB - Aft, Sta. 206.70, left		1
-18A	86535-003	. RIB - Aft, Sta. 206.70, right		1
19	86541-002	. RIB - Aft, Sta. 106.19, rear left		1
-19A	86541-003	. RIB - Aft, Sta. 106.19, rear right		1
20	86561-010	. SKIN ASSY - Outboard, top, left		1
-20A	86561-011	. SKIN ASSY - Outboard, top, right		1
21	86561-002	. SKIN ASSY - Center, top, left		1
-21A	86561-003	. SKIN ASSY - Center, top, right		1
22	67672-014	. SKIN ASSY - Aft, top, inboard, left		1
-22A	67672-015	. SKIN ASSY - Aft, top, inboard, right		1

-Item not illustrated

When ordering, always specify Part Number, Description, and Serial Number of Aircraft

FIGURE ITEM	PART NUMBER	NOMENCLATURE	EFFECT FROM TO	UNITS PER ASSY
4-				
23	67673-000	. . PAN - Wheel well		1
24	38586-010	. SKIN ASSY - Aft, bottom, inboard, left		1
-24A	38586-011	. SKIN ASSY - Aft, bottom, inboard, right		1
25	67095-000	. . HINGE - Main gear door, left		1
-25A	67095-001	. . HINGE - Main gear door, right		1
26	36718-002	. . BRACKET - Main gear up switch, left		1
-26A	36718-003	. . BRACKET - Main gear up switch, right		1
27	38649-002	. SKIN - Trailing edge, outboard, left		1
-27A	38649-003	. SKIN - Trailing edge, outboard, right		1
28	38529-006	. SKIN ASSY - Aft, bottom, center, left		1
-28A	38529-007	. SKIN ASSY - Aft, bottom, center, right		1
29	65898-000	. SUPPORT ASSY - Flap, inboard, left	3246001 thru 3246117	1
-29A	65898-000	. SUPPORT ASSY - Flap, inboard, left	3257001 thru 3257057	1
-29B	65898-016	. SUPPORT ASSY - Flap, inboard, left	3246118 and up	1
-29C	65898-016	. SUPPORT ASSY - Flap, inboard, left	3257058 and up	1
-29D	65898-001	. SUPPORT ASSY - Flap, inboard, right	3246001 thru 3246117	1
-29E	65898-001	. SUPPORT ASSY - Flap, inboard, right	3257001 thru 3257057	1
-29F	65898-017	. SUPPORT ASSY - Flap, inboard, right	3246118 and up	1
-29G	65898-017	. SUPPORT ASSY - Flap, inboard, right	3257058 and up	1
30	452-387	. . BEARING		1
31	65898-004	. SUPPORT ASSY - Flap, center	3246001 thru 3246117	1
-31A	65898-004	. SUPPORT ASSY - Flap, center	3257001 thru 3257057	1
-31B	65898-007	. SUPPORT ASSY - Flap, center	3246118 and up	1
-31C	65898-007	. SUPPORT ASSY - Flap, center	3257058 and up	1
32	452-387	. . BEARING		1
33	86555-002	. HINGE FITTING - Aileron, left		1
-33A	86555-003	. HINGE FITTING - Aileron, right		1
34	452-387	. . BEARING		1
35	86556-002	. HINGE FITTING - Aileron, left		1
-35A	86556-003	. HINGE FITTING - Aileron, right		1
36	452-387	. . BEARING		1
37	86544-002	. SPAR ASSY - Wing aft, outboard, left		1
-37A	86544-003	. SPAR ASSY - Wing aft, outboard, right		1
38	67079-000	. WEB - False spar, left		1
-38A	67079-001	. WEB - False spar, right		1
39	35425-000	. HINGE ASSY - Flap, outboard, left and right		1
40	452-387	. . BEARING		1
41	67694-000	. WEB - Wheel well		1
42	67670-000	. COVER ASSY - Control cable, left		1
-42A	67670-001	. COVER ASSY - Control cable, right		1
43	67689-002	. CAP - False spar. bottom, left		1
-43A	67689-003	. CAP - False spar, bottom, right		1
44	67097-002	. CAP - False spar, top, left		1
-44A	67097-003	. CAP - False spar, top, right		1
45	67071-000	. BRACKET - Main gear cylinder, left		1
-45A	67071-001	. BRACKET - Main gear cylinder, right		1
46	96308-002	. BRACKET - Wheel well, left		1
-46A	96308-003	. BRACKET - Wheel well, right		1
47	86543-002	. RIB - Aft, Sta. 101.39, left		1
-47A	86543-003	. RIB - Aft, Sta. 101.39, right		1
48	67678-000	. BRACKET ASSY - Pulley, left		1
-48A	67678-001	. BRACKET ASSY - Pulley, right		1
49	67677-000	. BRACKET - Pulley, left		1

-Item not illustrated

When ordering, always specify Part Number, Description, and Serial Number of Aircraft

FIGURE ITEM	PART NUMBER	NOMENCLATURE	EFFECT FROM TO	UNITS PER ASSY
4-				
-49A	67677-001	. BRACKET - Pulley, right		1
50	67103-000	. BRACKET - Wheel well, left		1
-50A	67103-001	. BRACKET - Wheel well, right		1
51	86540-002	. DOUBLER - Aileron hinge, left		1
-51A	86540-003	. DOUBLER - Aileron hinge, right		1
52	35337-002	. DOUBLER - Wing		1
53	38663-002	. CHANNEL - Bellcrank support		1
54	67676-002	. ZEE - Wheel well, left		1
-54A	67676-003	. ZEE - Wheel well, right		1
55	62129-004	. STIFFENER - Left, outboard		1
-55A	62129-003	. STIFFENER - Right, outboard		1
56	62129-008	. STIFFENER - Left, inboard		1
-56A	62129-007	. STIFFENER - Right, inboard		1
57	86573-004	. CUFF - Aft spar, outboard, left		1
-57A	86573-005	. CUFF - Aft spar, outboard, right		1
58	86633-002	. CHANNEL ASSY - Pitot head, left		1
59	67687-000	. ANGLE - Wheel well, left		1
-59A	67687-001	. ANGLE - Wheel well, right		1
-60	37304-004	. SPAR ASSY - Aft, inboard, left		1
-60A	37304-005	. FALSE SPAR - Aft, inboard, right		1
60B	67081-000	. ANGLE - False spar		1
61	35404-000	. ANGLE - Aileron hinge, left		1
-61A	35401-001	. ANGLE - Aileron hinge, right		1
62	38653-002	. RIB - Aft, Sta. 206.60, rear left		1
-62A	38653-003	. RIB - Aft, Sta. 206.60, rear right		1
63	38656-002	. RIB - Aft, Sta. 190.90, rear left		1
-63A	38656-003	. RIB - Aft, Sta. 190.90, rear right		1
64	38652-002	. RIB - Aft, Sta. 174.00, rear left		1
-64A	38652-003	. RIB - Aft, Sta, 174.00, rear right		1
65	38581-010	. SKIN - Aft, bottom, outboard, left		1
-65A	38581-011	. SKIN - Aft, bottom, outboard, right		1
66	38581-006	. SKIN ASSY - Aft, bottom, outboard, left		1
-66A	38581-007	. SKIN ASSY - Aft, bottom, outboard, right		1
67	67065-000	. ANGLE - False spar		1
68	37487-000	. ANGLE - False spar		1
69	78159-000	. ANGLE - Aft rib		1
70	68817-035	. PLATE - False spar		1
71	63078-017	. PAD - Bumper, rubber		3
72	78309-000	. SUPPORT - Left	3246154 and up	1
-72A	78309-000	. SUPPORT - Left	3257124 and up	1
-72B	78309-001	. SUPPORT - Right	3246154 and up	1
-72C	78309-001	. SUPPORT - Right	3257124 and up	1

-Item not illustrated

When ordering, always specify Part Number, Description, and Serial Number of Aircraft

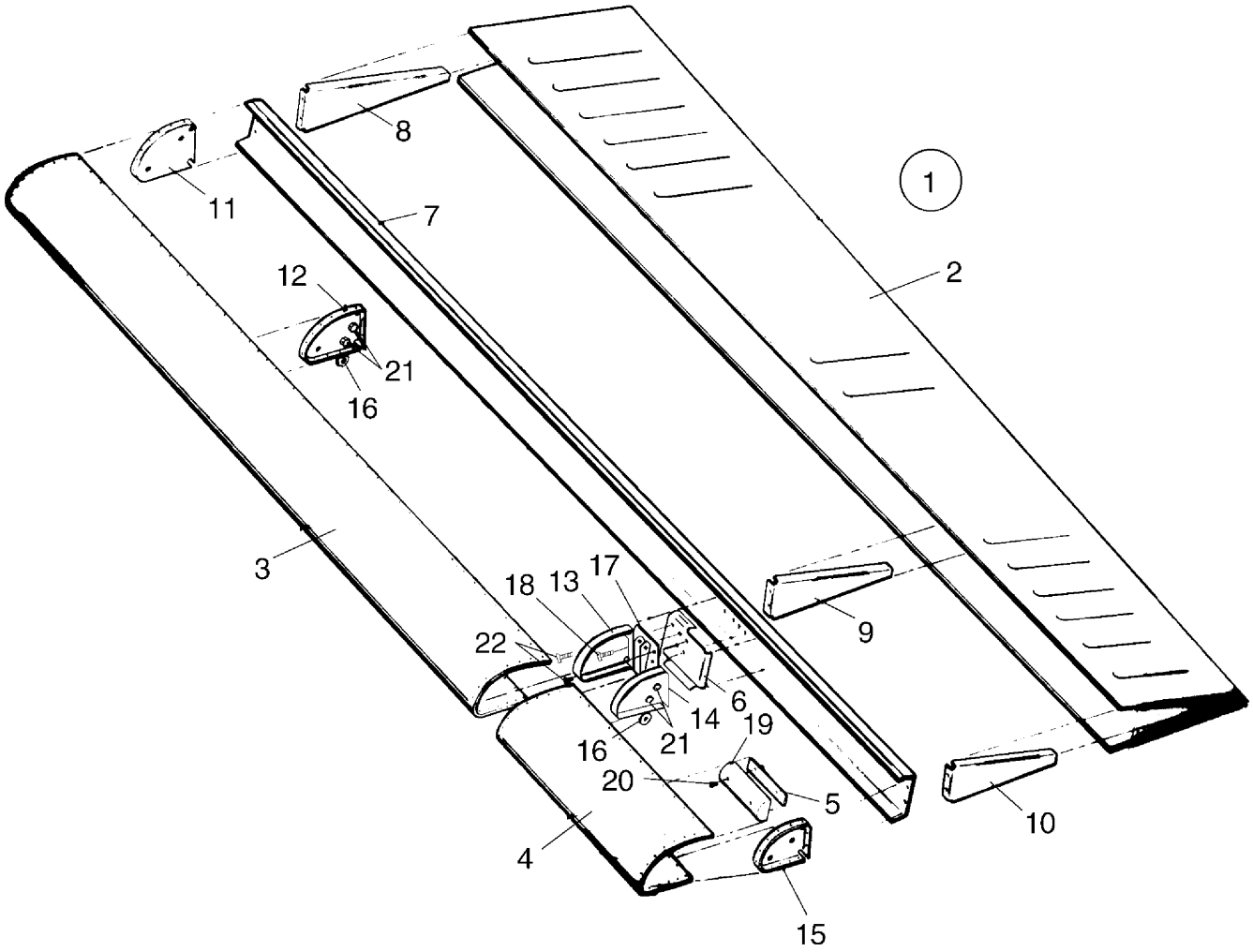

Figure 5. Aileron Assembly

FIGURE ITEM	PART NUMBER	NOMENCLATURE	EFFECT FROM TO	UNITS PER ASSY
5	38500 (BP)	DRAWING - Aileron Assy		
1	38650-004	AILERON ASSY - Left		RF
-1A	38650-005	AILERON ASSY - Right		RF
2	38647-002	. SKIN - Aileron, aft, left		1
-2A	38647-003	. SKIN - Aileron, aft, right		1
3	86562-008	. SKIN - Aileron, leading edge, inboard, left		1
-3A	86562-009	. SKIN - Aileron, leading edge, inboard, right		1
4	38648-004	. SKIN - Aileron, leading edge, outboard, left		1
-4A	38648-005	. SKIN - Aileron, leading edge, outboard, right		1
5	37280-005	. RETAINER ASSY - Balance weight		1
6	38661-002	. DOUBLER - Aileron, left		1
-6A	38661-003	. DOUBLER - Aileron, right		1
7	38646-002	. SPAR - Aileron, left		1
-7A	38646-003	. SPAR - Aileron, right		1
8	35640-008	. RIB - Aileron, inboard, left		1
-8A	35640-009	. RIB - Aileron, inboard, right		1
9	35640-010	. RIB - Aileron, center, left		1
-9A	35640-011	. RIB - Aileron, center, right		1
10	38644-002	. RIB - Aileron, outboard, left		1
-10A	38644-003	. RIB - Aileron, outboard, right		1
11	86395-002	. RIB - Aileron, nose, inboard, left		1
-11A	86395-003	. RIB - Aileron, nose, inboard, right		1
12	86396-002	. RIB ASSY - Aileron, nose, center, left		1
-12A	86396-003	. RIB ASSY - Aileron, nose, center, right		1
13	86397-004	. RIB - Aileron, nose, center, left		1
-13A	86397-005	. RIB - Aileron, nose, center, right		1
14	86398-002	. RIB ASSY - Aileron, nose, center, left (Refer to Piper Service Bulletin #1011 - Latest Revision for serial numbers 3246001 thru 3246081 and 3257001 and 3257002)		1
-14A	86398-003	. RIB ASSY - Aileron, nose, center, right (Refer to Piper Service Bulletin #1011 - Latest Revision for serial numbers 3246001 thru 3246081 and 3257001 and 3257002)		1
15	38645-002	. RIB - Aileron, nose, outboard. left		1
-15A	38645-003	. RIB - Aileron, nose, outboard, right		1
16	86392-002	. FITTING - Aileron hinge, left		2
-16A	86392-003	. FITTING - Aileron hinge, right		2
17	38660-002	. FITTING - Aileron pushrod attachment, left (Refer to Piper Service Bulletin #1028 - Latest Revision for serial numbers 3246102 thru 3246121 and 3257029 thru 3257064)		1
-17A	38660-003	. FITTING - Aileron pushrod attachment, right (Refer to Piper Service Bulletin #1028 - Latest Revision for serial numbers 3246102 thru 3246121 and 3257029 thru 3257064)		1
-17B	101335-002	. SAFETY CLIP (Refer to Piper Service Bulletin #1028 - Latest Revision for serial numbers 3246102 thru 3246121 and 3257029 thru 3257064)	3246102 thru 3246121 3257029 thru 3257064	8
18	410-039	. SCREW - (MS24694-S51)		4
19	37281-002	. WEIGHT - Aileron nose		1
20	415-628	. SCREW - (MS35206-328)		4

-Item not illustrated

When ordering, always specify Part Number, Description, and Serial Number of Aircraft

FIGURE ITEM	PART NUMBER	NOMENCLATURE	EFFECT FROM TO	UNITS PER ASSY
5-				
21	401-266	. BOLT - (AN3-5A)		4
-21A	690-612	. WASHER - (NAS1149FN363P)		4
-21B	404-526	. NUT - (MS21042-3)		4
22	401-266	. BOLT - (AN3-5A)		4
-22A	690-612	. WASHER - (NAS1149FN363P)		4
-22B	406-816	. ANCHOR NUT - (NAS687-A3)		2
-23	406-825	. NUT PLATE - (NAS686-A3K)		2
-24	581-760	. PLATE ID - (See Figure 54)		RF

-Item not illustrated

When ordering, always specify Part Number, Description, and Serial Number of Aircraft

THIS PAGE INTENTIONALLY LEFT BLANK

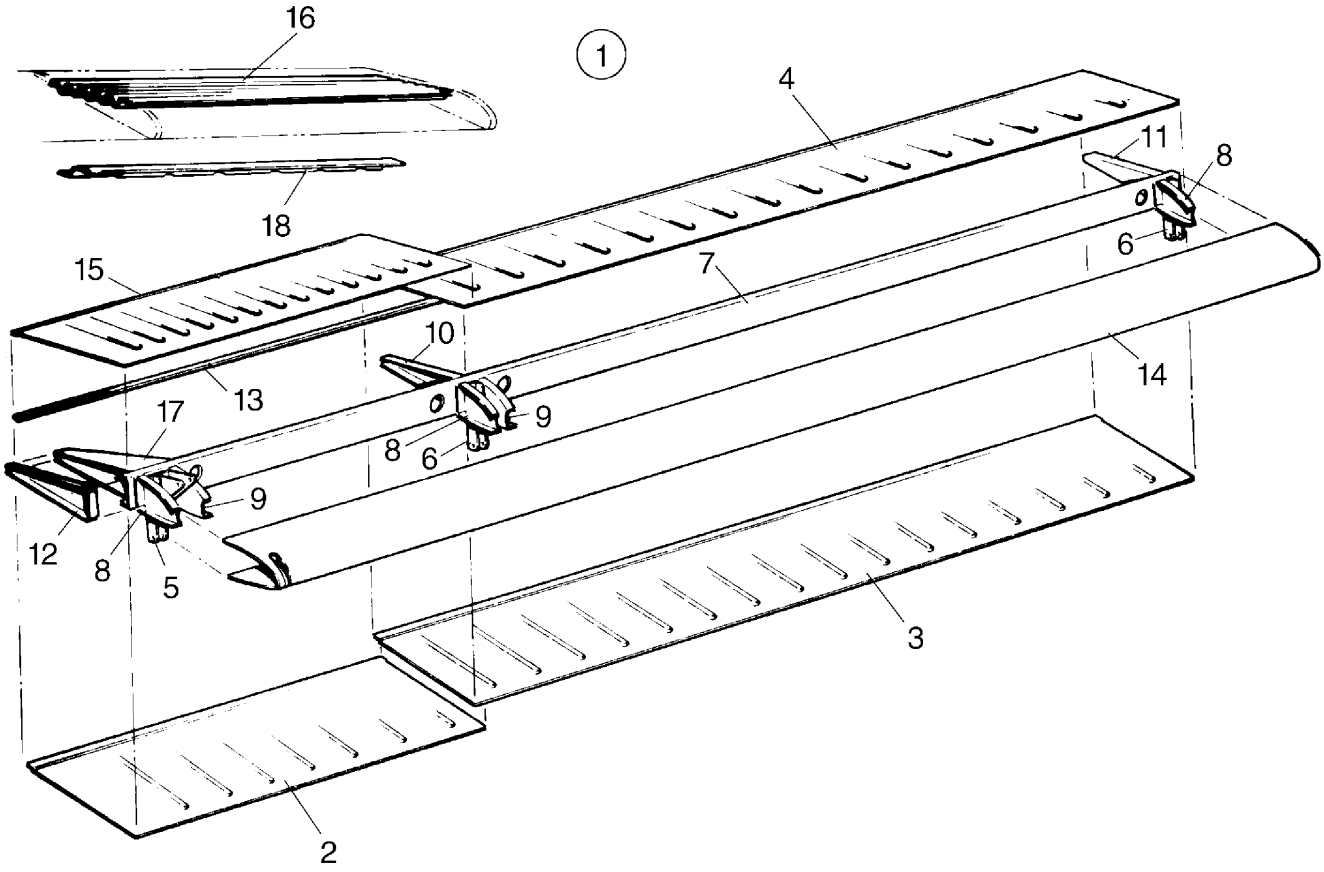

Figure 6. Flap Assembly

FIGURE ITEM	PART NUMBER	NOMENCLATURE	EFFECT FROM TO	UNITS PER ASSY
6	38500 (BP)	DRAWING - Wing Installation		
1	65591-000	FLAP ASSY - Left		RF
-1A	65590-001	FLAP ASSY - Right		RF
2	65592-000	. SKIN - Flap, bottom, left, inboard		1
-2A	65592-001	. SKIN - Flap, bottom, right, inboard		1
3	65588-000	. SKIN - Flap, bottom, left and right, outboard		1
4	65589-000	. SKIN - Flap, top, left and right, outboard		1
5	62324-000	. HINGE - Flap, inboard, left		1
-5A	62324-001	. HINGE - Flap, inboard, right		1
-5B	85195-005	. FAIRING - Flap bracket		1
6	65899-000	. BRACKET - Flap hinge, center and outboard		2
-6A	85195-004	. FAIRING - Flap bracket		2
7	62327-000	. SPAR - Flap		1
8	62328-000	. RIB - Left flap		2
-8A	62328-001	. RIB - Right flap		2
9	62328-001	. RIB - Left flap		1
-9A	62328-000	. RIB - Right flap		1
10	62332-002	. RIB - Flap, left, wing, Sta. 49		1
-10A	62332-000	. RIB - Flap, right, wing, Sta. 49		1
11	62330-000	. RIB - Flap, left		1
-11A	62330-001	. RIB - Flap, right		1
12	62331-000	. RIB - Flap, left, inboard		1
-12A	62331-001	. RIB - Flap, right, inboard		1
13	62320-003	. STRIP - Flap		1
14	65586-008	. SKIN - Flap, left, nose		1
-14A	65586-005	. SKIN - Flap, right, nose		1
15	65587-000	. SKIN - Flap, top, left, inboard		1
-15A	65594-001	. SKIN - Flap, top, right, inboard		1
16	65593-001	. DOUBLER - Corrugation - Flap, top, right, inboard		1
17	62336-000	. DOUBLER ASSY - Left		1
-17A	62336-001	. DOUBLER ASSY - Right		1
18	65595-001	. ZEE - Flap, inboard, right		1
-19	62320-006	. RIB ASSY - Left flap		1
-19A	62320-007	. RIB ASSY - Right flap		1
-20	62328-004	. . RIB - Left flap, inboard		1
-20A	62328-003	. . RIB - Right flap, inboard		1
-21	62328-001	. . RIB - Left flap, outboard		1
-21A	62328-000	. . RIB - Right flap, outboard		1
-22	62324-000	. . WELD ASSY - Left flap		1
-22A	62324-001	. . WELD ASSY - Right flap		1
-23	581-760	. PLATE ID - (See Figure 54)		RF
-24	405-526	. NUT - (MS21042-3)		2
-24A	690-609	. WASHER - (NAS1149FN332P)		2
-24B	690-612	. WASHER - (NAS1149FN363P)		4
-24C	401-266	. BOLT - (AN3-5A)		2
-24D	400-438	. BOLT - (AN3-4A)		2

-Item not illustrated

When ordering, always specify Part Number, Description, and Serial Number of Aircraft

THIS PAGE INTENTIONALLY LEFT BLANK

SECTION II
FUSELAGE GROUP

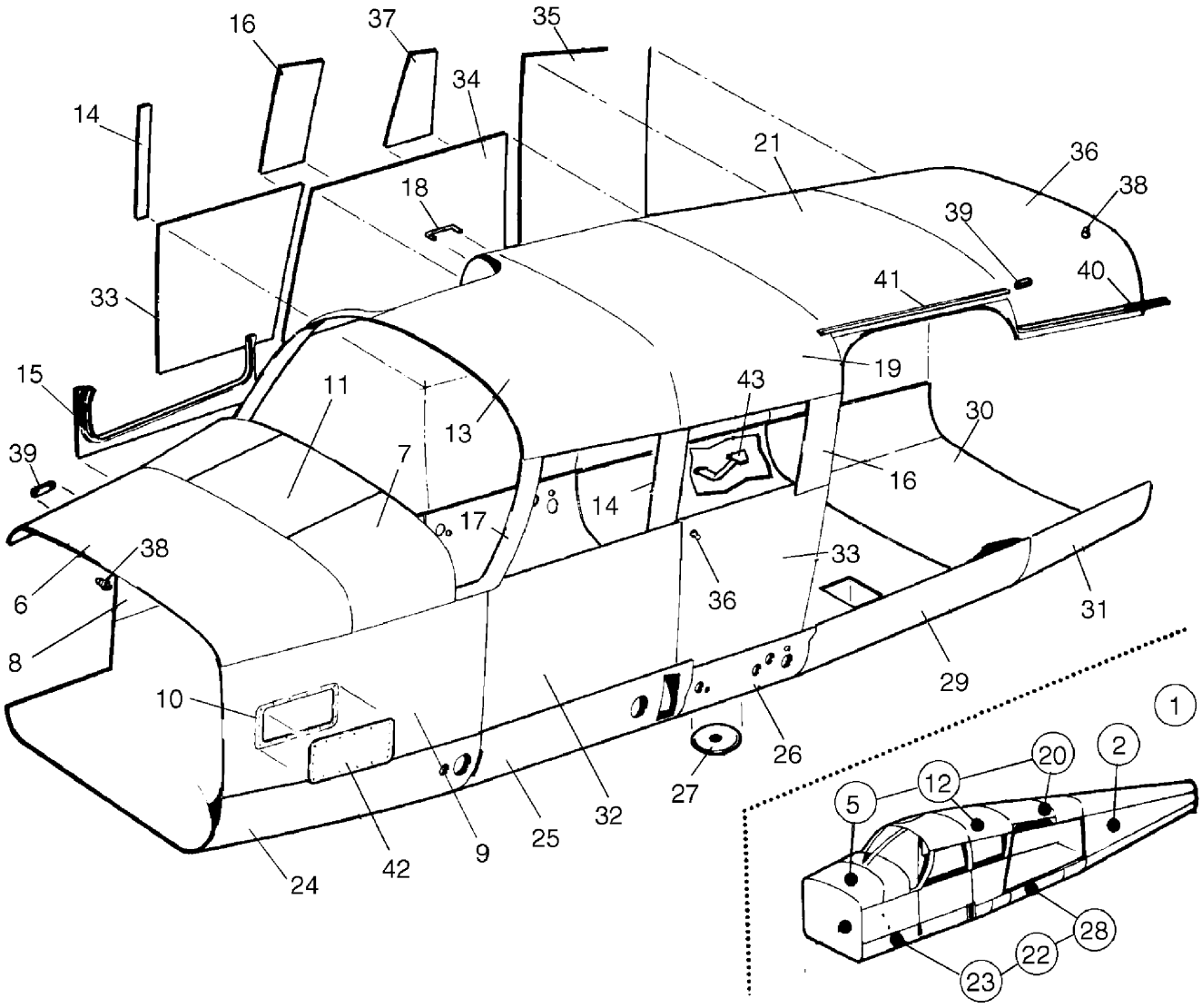

Figure 7. Fuselage Assembly - Complete

FIGURE ITEM	PART NUMBER	NOMENCLATURE	EFFECT FROM TO	UNITS PER ASSY
7	38001 (FS)	DRAWING - Fuselage Assy	3246001 thru 3246017	
	85517 (BJ)	DRAWING - Fuselage Assy	3246018 and up	
	85517 (BJ)	DRAWING - Fuselage Assy	3257001 and up	
1	38001-011	FUSELAGE ASSY	3246001 thru 3246017	1
-1A	85517-002	FUSELAGE ASSY (When ordering, specify with or without provisions for air conditioning)	3246018 thru 3246087	1
-1B	85517-004	FUSELAGE ASSY (When ordering, specify with or without provisions for air conditioning)	3246088 and up	1
-1C	85517-003	FUSELAGE ASSY (When ordering, specify with or without provisions for air conditioning)	3257001 and up	1
2	99466-011	FUSELAGE ASSY - Aft section (See Figure 13 for component parts)(When ordering, specify with or without provisions for air conditioning)		RF
-2A	99466-025	FUSELAGE ASSY - Aft section (See Figure 13 for component parts)(When ordering, specify with or without provisions for air conditioning)		RF
-3	85500-680	. COCKPIT ASSEMBLY - Fuselage	3246088 and up	1
-3A	100970-680	. COCKPIT ASSEMBLY - Fuselage	3257001 and up	1
-4	85500-684	. . COCKPIT ASSEMBLY - Fuselage, upper	3246088 and up	1
-4A	100970-684	. . COCKPIT ASSEMBLY - Fuselage, upper	3257001 and up	1
5	38001-011	. . . UPPER COCKPIT ASSY - Forward (See Figure 8 for balance of component parts)		RF
-5A	85517-002	. . . UPPER COCKPIT ASSY - Forward (See Figure 8 for balance of component parts)		RF
-5B	85517-003	. . . UPPER COCKPIT ASSY - Forward (See Figure 8 for balance of component parts)		RF
-5C	85517-004	. . . UPPER COCKPIT ASSY - Forward (See Figure 8 for balance of component parts)		RF
6	69908-000	. . . . SKIN - Top front		1
7	69895-007	. . . . SKIN - Top left	3246088 and up 3257001 and up	1
-7A	69895-006	. . . . SKIN - Top right	3246001 thru 3246017	1
8	79563-006	. . . . SKIN - Right side		1
9	38229-000	. . . . SKIN - Left front		1
10	38046-000	. . . . DOUBLER - Access cover		1
11	85362-002	. . . COVER - Cowel deck	3246001 thru 3246087	1
-11A	85362-010	. . . COVER - Cowel deck	3246088 and up 3257001 and up	1
12	38001-011	. . . UPPER COCKPIT ASSY - Center (See Figure 9 for balance of component parts)		RF
-12A	85517-002	. . . UPPER COCKPIT ASSY - Center (See Figure 9 for balance of component parts)		RF
-12B	85517-003	. . . UPPER COCKPIT ASSY - Center (See Figure 9 for balance of component parts)		RF
-12C	85517-004	. . . UPPER COCKPIT ASSY - Center (See Figure 9 for balance of component parts)		RF
13	69899-002	. . . . SKIN - Top front	3246018 and up 3257001 and up	1
14	69691-000	. . . SKIN - Left side, window trim		1
-14A	69694-000	. . . SKIN - Right side, window trim		1

-Item not illustrated

When ordering, always specify Part Number, Description, and Serial Number of Aircraft

FIGURE ITEM	PART NUMBER	NOMENCLATURE	EFFECT FROM TO	UNITS PER ASSY
7-				
15	79547-000	. . . PAN - Upper cockpit		RF
		(See Figure 9 for balance of component parts)		
16	69692-000	. . . SKIN - Left side, window trim		1
-16A	69695-002	. . . SKIN - Right side, window trim		1
17	76255-000	. . . SKIN - Left side, window trim	3246001 thru 3246017	1
18	481-772	. . . PULL		1
19	69902-000	. . . SKIN - Top		1
20	38001-011	. . . UPPER COCKPIT ASSY - Aft		RF
		(See Figure 10 for balance of component parts)		
-20A	85517-002	. . . UPPER COCKPIT ASSY - Aft		RF
		(See Figure 10 for balance of component parts)		
-20B	85517-003	. . . UPPER COCKPIT ASSY - Aft		RF
		(See Figure 10 for balance of component parts)		
-20C	85517-004	. . . UPPER COCKPIT ASSY - Aft		RF
		(See Figure 10 for balance of component parts)		
21	39530-809	. . . . SKIN - Top		1
22	85500-682	. . COCKPIT ASSEMBLY - Fuselage, lower	3246088 and up	1
-22A	100970-682	. . COCKPIT ASSEMBLY - Fuselage, lower	3257001 and up	1
23	38001-011	. . . LOWER COCKPIT ASSY - Forward		RF
		(See Figure 11 for balance of component parts)		
-23A	85517-002	. . . LOWER COCKPIT ASSY - Forward		RF
		(See Figure 11 for balance of component parts)		
-23B	85517-003	. . . LOWER COCKPIT ASSY - Forward		RF
		(See Figure 11 for balance of component parts)		
-23C	85517-004	. . . LOWER COCKPIT ASSY - Forward		RF
		(See Figure 11 for balance of component parts)		
24	38228-000	. . . . SKIN - Bottom		1
25	69905-000	. . . . SKIN - Bottom		1
26	38227-003	. . . . SKIN - Bottom	3246018 and up 3257001 and up	1
27	65072-000	. . . . COVER ASSY - Access door		1
28	38001-011	. . . LOWER COCKPIT ASSY - Aft		RF
		(See Figure 12 for balance of component parts)		
-28A	85517-002	. . . LOWER COCKPIT ASSY - Aft		RF
		(See Figure 12 for balance of component parts)		
-28B	85517-003	. . . LOWER COCKPIT ASSY - Aft		RF
		(See Figure 12 for balance of component parts)		
-28C	85517-004	. . . LOWER COCKPIT ASSY - Aft		RF
		(See Figure 12 for balance of component parts)		
29	69898-000	. . . . SKIN - Bottom		1
30	69890-979	. . . . SKIN - Bottom		1
-30A	38001-810	. . . . SKIN - Bottom		1
31	68602-000	. . . . SKIN - Bottom, left		1
-31A	68602-001	. . . . SKIN - Bottom, right		1
32	76474-903	. . SKIN - Left side		1
33	85286-002	. . SKIN - Left side, fuselage and cockpit		1
-33A	85286-003	. . SKIN - Right side		1
34	85286-006	. . SKIN - Right side		1
35	85286-005	. SKIN - Right side		1
36	69904-000	. SKIN - Top		1
37	69696-000	. SKIN - Right side		1
38	690-727	. STUD - (AN227-22)		2
39	37939-003	. COVER ASSY - Baggage switch		2

-Item not illustrated

When ordering, always specify Part Number, Description, and Serial Number of Aircraft

FIGURE ITEM	PART NUMBER	NOMENCLATURE	EFFECT FROM TO	UNITS PER ASSY
7-				
40	69881-002	. GUTTER - Cargo door		1
41	69881-003	. GUTTER - Cabin door		1
42	38046-002	COVER - Access		1
43	68014-000	STEP ASSY		1
-43A	400-002	. BOLT - (AN4-5A)		4
-43B	690-613	. WASHER - (NAS1149F0432)		4
-43C	404-530	. NUT - (MS21042-4)		2
-44	79427-002	COVER - ADF antenna closeout		1

-Item not illustrated

When ordering, always specify Part Number, Description, and Serial Number of Aircraft

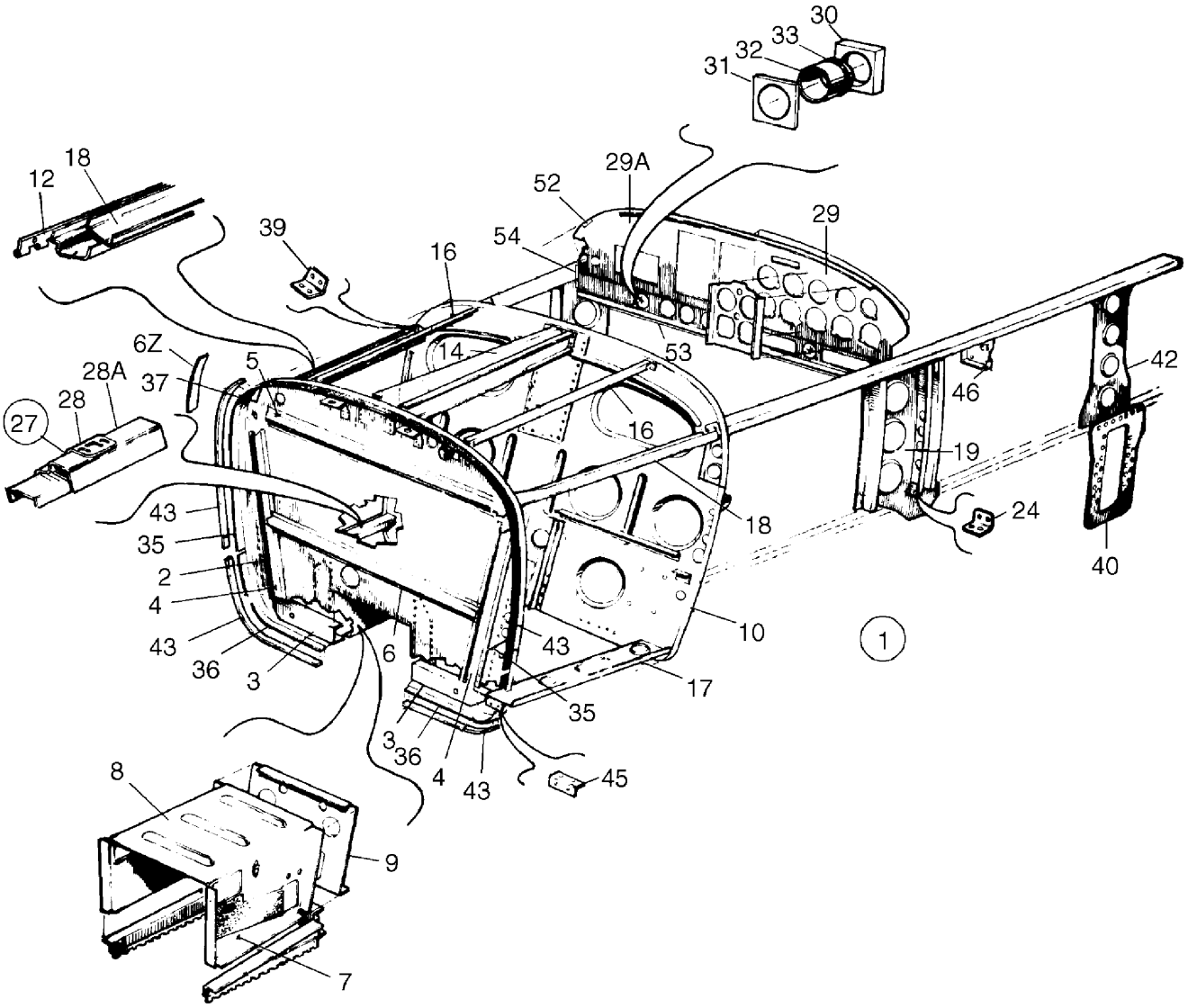

Figure 8. Fuselage Upper Forward Cockpit Assembly

FIGURE ITEM	PART NUMBER	NOMENCLATURE	EFFECT FROM TO	UNITS PER ASSY
8	38001 (FS)	DRAWING - Fuselage Assy	3246001 thru 3246017	
	85517 (BJ)	DRAWING - Fuselage Assy	3246018 and up 3257001 and up	
1	38001-011	UPPER COCKPIT ASSY - Forward	3246001 thru 3246017	RF
-1A	85517-002	UPPER COCKPIT ASSY - Forward	3246018 thru 3246087	RF
-1B	85517-004	UPPER COCKPIT ASSY - Forward	3246088 and up	RF
-1C	85517-003	UPPER COCKPIT ASSY - Forward	3257001 and up	RF
2	38035-017	. FIREWALL ASSY - Upper cockpit	3246001 thru 3246087	1
2	38035-020	. FIREWALL ASSY - Upper cockpit	3246088 and up	1
2	38035-022	. FIREWALL ASSY - Upper cockpit	3257001 and up	1
3	38035-003	. . CHANNEL - Firewall, left		1
-3A	38035-004	. . CHANNEL - Firewall, right		1
4	68214-002	. . CHANNEL - Hat, firewall, left		1
-4A	68214-003	. . CHANNEL - Hat, firewall, right		1
5	68215-000	. . CHANNEL - Hat, firewall, upper	3246001 and up	1
6	38035-002	. . CHANNEL - Hat, firewall, center	3246001 and up	1
-6A	38145-000	. . VALVE ASSY		1
-6B	690-616	. . WASHER - (NAS1149FN832P)		4
-6C	38036-003	. . WEB - Firewall	3246001 thru 3246087	1
-6D	38204-000	. . ADAPTER		1
-6E	506-536	. . NUT PLATE - (MS21059L4K)		2
-6F	506-525	. . NUT PLATE - (MS21059L3K)	3257001 and up	26
-6G	690-612	. . WASHER - (NAS1149F0363P)	3257001 and up	34
-6H	415-533	. . SCREW - (MS35206-243)		4
-6J	404-155	. . NUT - (MS21083N08)		4
-6K	400-438	. . BOLT - (AN3-4A)	3257001 and up	34
-6L	38035-006	. . ANGLE - Right hand opposite	3246001 thru 3246087	1
-6M	38145-006	. . GASKET		1
-6N	38744-002	. . GASKET	3257001 and up	1
-6P	506-543	. . NUT PLATE - (MS21061L3K)	3246088 and up	2
-6Q	506-543	. . NUT PLATE - (MS21061L3K)	3257001 and up	10
-6R	38036-005	. . WEB FIREWALL	3246088 and up	1
-6S	477-809	. . NUT PLATE - (MS21059L08)	3257001 and up	1
-6T	100948-002	. . CLIP ASSY	3257001 and up	3
-6U	38036-007	. . WEB - Firewall	3257001 and up	1
-6V	100776-002	. . HAT	3257001 and up	1
-6W	100788-002	. . STIFFENER	3257001 and up	1
-6X	100566-003	. . PANEL ASSY	3257001 and up	1
-6Y	100722-002	. . STIFFENER	3257001 and up	1
6Z	68217-000	. . JAMB - Firewall		1
7	38037-005	. WEB ASSY - Wheel well, left		1
-7A	38037-006	. WEB ASSY - Wheel well, right		1
8	38037-004	. COVER - Wheel well		1
9	38037-000	. COVER - Wheel well		1
10	38034-000	. BULKHEAD ASSY - Sta. 49.5		1
-11	68267-000	. JAMB - Baggage door		1
12	68266-000	. HINGE HALF - Forward baggage		1
-13	68277-000	. FITTING - Engine mount, center		1
14	68275-000	. CHANNEL - Forward baggage	3246001 thru 3246017	1
-14A	68275-002	. CHANNEL - Forward baggage	3246018 and up	1
-14A	68275-002	. CHANNEL - Forward baggage	3257001 and up	1
-15	68282-000	. FITTING - Engine mount, left		1
-15A	68282-001	. FITTING - Engine mount, right		1
16	68278-000	. STIFFENER - Skin, top front		2
17	38044-000	. LONGERON - Lower		1

-Item not illustrated

When ordering, always specify Part Number, Description, and Serial Number of Aircraft

FIGURE ITEM	PART NUMBER	NOMENCLATURE	EFFECT FROM TO	UNITS PER ASSY
8-				
18	68280-000	. LONGERON - Forward, left		1
-18A	68280-001	. LONGERON - Forward, right		1
19	68250-004	. WEB - Upper cockpit, left		1
-19A	68251-004	. WEB - Upper cockpit, right		1
-20	68254-000	. LONGERON - Upper cockpit, left		1
-21	68258-005	. LONGERON ASSEMBLY - Upper cockpit, right		1
-22	79553-000	. FITTING - Web assembly, left		1
-22A	79553-001	. FITTING - Web assembly, right		1
-23	96839-000	. CLIP - Web assembly, left		1
-23A	96839-001	. CLIP - Web assembly, right		1
24	62514-000	. CLIP - Web assy		2
27	69491-000	. DOOR SILL ASSY - Forward baggage		1
28	66794-000	. . STRIKER PLATE - Door sill		1
28A	69492-000	. . JAMB - Forward baggage		1
-28B	62506-000	. CLIP		1
-28C	68262-000	. CHANNEL		1
-28D	414-763	. SCREW - (MS24693-S50)		2
-28E	506-516	. NUT PLATE - (MS21061L08K)		2
29	85199-006	PANEL - Instrument, right	3246001 thru 3246017	1
-29	85199-003	PANEL - Instrument, right (Optional for Air Condition Installation)	3246001 thru 3246017	1
29	85199-011	PANEL - Instrument, right	3246018 thru 3246059	1
29	85199-018	PANEL - Instrument, right	3246060 thru 3246087	1
29	100834-007	PANEL - Instrument, right	3246088 thru 3246125 3257001 thru 3257075	1
29	101247-004	PANEL - Instrument, right	3246126 thru 3246165 3257076 thru 3257143 3257145 thru 3257155	1
29	104389-004	PANEL - Instrument, right	3246166 and up 3257144 3257156 and up	1
29A	85199-014	PANEL - Instrument, left	3246001 thru 3246017	1
29A	85199-009	PANEL - Instrument, left	3246018 thru 3246087	1
29A	100834-020	PANEL - Instrument, left	3246088 thru 3246125	1
29A	100834-020	PANEL - Instrument, left	3257001 thru 3257075	1
29A	101247-002	PANEL - Instrument, left	3246126 thru 3246165 3257076 thru 3257143 3257145 thru 3257155	1
29A	104389-002	PANEL - Instrument, left	3246166 and up 3257144 3257156 and up	1
-29B	85208-002	RADIO RACK ASSY		1
-29C	404-489	. NUT - (MS21044N08)		2
-29D	690-616	. WASHER - (NAS1149FN832P)		3
-29E	414-506	. SCREW - (MS24693S26)		1
-29F	415-535	. SCREW - (MS35206-245)		3
-29G	494-073	. WASHER		3
-29H	414-741	. SCREW - (MS24693-S25)		2
30	68272-002	. PLATE - Control wheel	3246018 and up 3257001 and up	2
31	68272-003	. PLATE - Control wheel	3246018 and up 3257001 and up	4

-Item not illustrated

When ordering, always specify Part Number, Description, and Serial Number of Aircraft

FIGURE ITEM	PART NUMBER	NOMENCLATURE	EFFECT FROM TO	UNITS PER ASSY
8-				
32	68273-002	. BUSHING - Control wheel	3246018 and up 3257001 and up	2
33	484-792	. O-RING - Control wheel (MS28775-218)	3246018 and up 3257001 and up	2
-34	68272-004	. PLATE - Control wheel		2
35	68290-003	FLANGE - Engine cowl, right		1
36	68290-005	FLANGE - Engine cowl, right		1
37	68290-004	FLANGE - Engine cowl, top		1
-38	68279-000	PLATE ASSEMBLY - Joggle strip, left		1
-38A	68279-004	PLATE ASSEMBLY - Joggle strip, right		1
39	68283-000	CLIP - Channel attachment, left		1
-39A	68283-001	CLIP - Channel attachment, right		1
40	62542-000	GUSSET - Left		1
-40A	62542-001	GUSSET - Right		1
-41	99421-000	CHANNEL - Armrest support		2
42	62644-000	WEB - Forward cockpit, Sta. 108		1
43	65692-003	SEAL - Cowl, upper		1
45	68286-000	CLIP - Attachment		1
46	69347-003	MOUNT ASSY - Switch plate	3246001 thru 3246017	1
-47	69475-000	MOUNT ASSEMBLY - Switch plate		1
52	39515-004	CLIP ASSY - Instrument panel, left	3246001 thru 3246017	1
-52A	39515-005	CLIP ASSY - Instrument panel, right	3246001 thru 3246017	1
-52B	39515-002	CLIP ASSY - Instrument panel	3246018 and up 3257001 and up	1
-52C	39515-003	CLIP ASSY - Instrument panel	3246018 and up 3257001 and up	1
-52D	486-106	SCREW		6
53	85199-004	CHANNEL ASSY - Instrument panel	3246001 thru 3246087	1
-53A	100834-014	CHANNEL ASSY - Instrument panel	3246088 and up 3257001 and up	1
54	87260-004	BRACKET ASSY - Instrument panel, left		1
-54A	87261-004	BRACKET ASSY - Instrument panel, right		1
-54B	486-106	SCREW		6

-Item not illustrated

When ordering, always specify Part Number, Description, and Serial Number of Aircraft

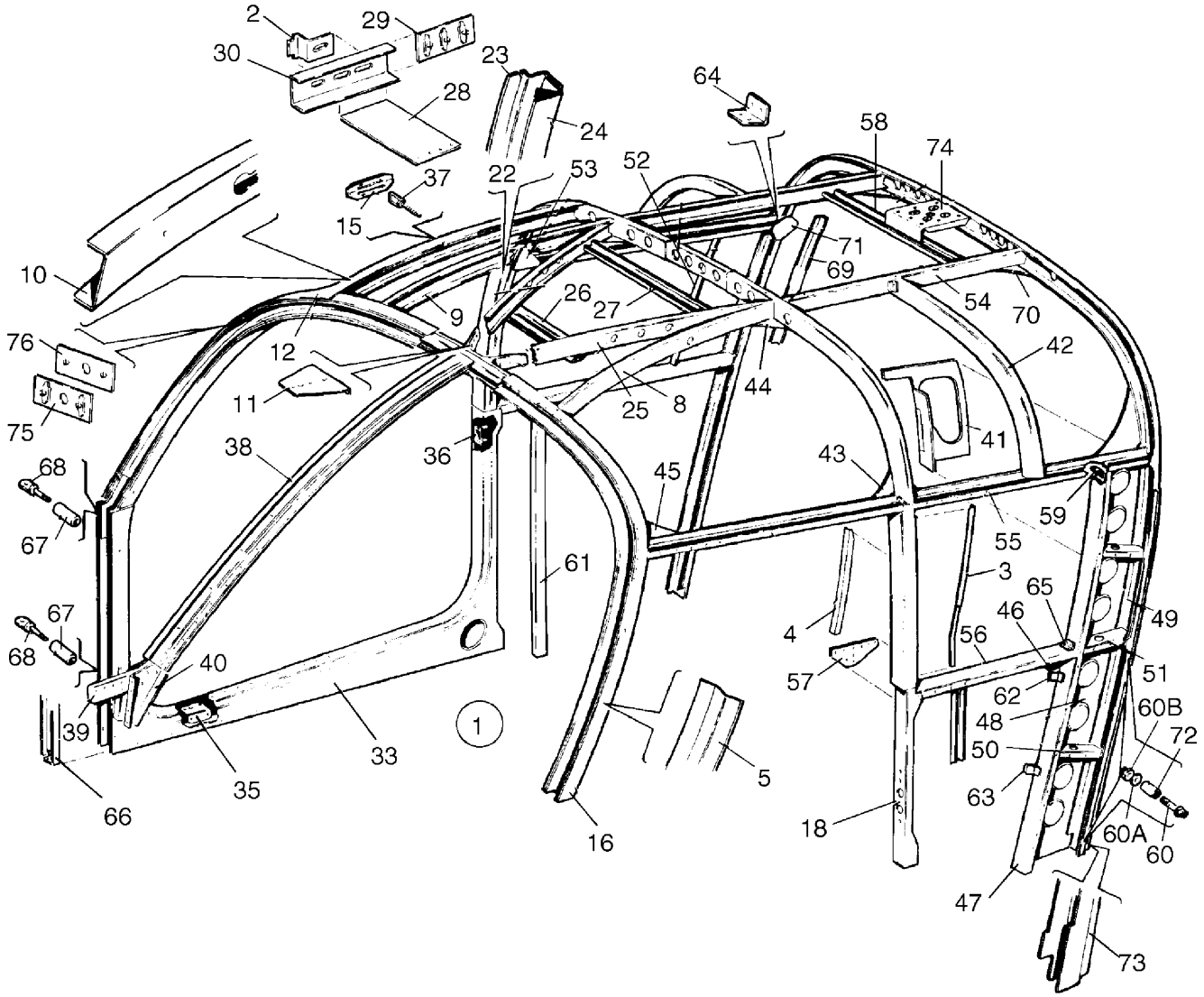

Figure 9. Fuselage Upper Center Cockpit Assembly

FIGURE ITEM	PART NUMBER	NOMENCLATURE	EFFECT FROM TO	UNITS PER ASSY
9	38001 (FS)	DRAWING - Fuselage Assy	3246001 thru 3246017	
	85517 (BJ)	DRAWING - Fuselage Assy	3246018 and up	
	85517 (BJ)	DRAWING - Fuselage Assy	3257001 and up	
1	38001-011	UPPER COCKPIT ASSY - Center	3246001 thru 3246017	RF
-1A	85517-002	UPPER COCKPIT ASSY - Center	3246018 thru 3246087	RF
-1B	85517-004	UPPER COCKPIT ASSY - Center	3246088 and up	RF
-1C	85517-003	UPPER COCKPIT ASSY - Center	3257001 and up	RF
2	69739-000	. CLIP - Door latch lock		1
3	69698-000	. ANGLE - Upper cockpit, left	3246001 thru 3246017	1
-3A	69698-001	. ANGLE - Upper cockpit, right	3246001 thru 3246017	1
4	69697-000	. ANGLE - Upper cockpit	3246001 thru 3246017	1
5	69891-006	. RETAINER - Upper cockpit, left, upper	3246001 thru 3246017	1
-5A	69891-007	. RETAINER - Upper cockpit, right, upper	3246001 thru 3246017	1
-6	62479-002	. CHANNEL - Upper cockpit		1
-7	62516-000	. CLIP - Channel assembly, upper cockpit		1
8	68382-002	. CHANNEL ASSY - Upper cockpit, left		1
9	68352-003	. CHANNEL - Upper cockpit, right		1
10	62874-006	. CHANNEL - Upper cockpit, right		1
11	79162-000	. DOUBLER - Antenna		1
12	79561-000	. PAN ASSY - Upper (Refer to Piper Service Bulletin #996 - latest revision for serial numbers 3246001 thru 3246005 and 3246008)	3246001 thru 3246017	1
-12A	79561-029	. PAN ASSY - Upper	3246018 thru 3246040	1
-12B	79561-038	. PAN ASSY - Upper	3246041 thru 3246093	1
-12C	79561-046	. PAN ASSY - Upper	3246094 and up	1
-12D	79561-038	. PAN ASSY - Upper	3257001 thru 3257010	1
-12E	79561-046	. PAN ASSY - Upper	3257011 and up	1
-13	79561-006	. . PAN - Inner		1
-14	79561-005	. . PAN - Outer		1
15	79234-000	. PLATE - Forward door latch	3246001 thru 3246017	1
16	69888-000	. FRAME ASSY - Canted, fuselage, Sta. 851		1
-17	68320-003	. . FITTING - Windshield bow		1
18	68325-002	. FRAME ASSY - Sta. 108		1
-19	68331-000	. . CHANNEL - Fuselage frame, left		1
-19A	68331-001	. . CHANNEL - Fuselage frame, right		1
-20	68327-000	. . CHANNEL ASSEMBLY		1
-21	68326-000	. . CHANNEL - Splice		1
22	79561-903	. PAN ASSEMBLY - Side		1
23	79561-007	. . PAN - Upper cockpit, outer		1
24	79561-008	. . PAN - Upper cockpit, inner		1
25	68342-010	. CHANNEL - Upper cockpit, center, left		1
-25A	68342-011	. CHANNEL - Upper cockpit, center, right		1
26	68308-000	. HAT - Upper cockpit	3246001 thru 3246017	1
27	68307-000	. HAT - Upper cockpit, channel	3246001 thru 3246017	1
28	69742-000	. PLATE - Door latch	3246001 thru 3246017	1
29	69738-000	. PLATE ASSY - Door latch	3246001 thru 3246017	1
30	69740-002	. CHANNEL - Door latch	3246001 thru 3246017	1
-31	79561-004	. JAMB - Door, forward		1
-32	76467-004	. CHANNEL - Upper cockpit		1
33	79547-000	LOWER PAN ASSY - Upper cockpit		1
-34	79547-003	. PAN - Upper cockpit, inner		1
-34A	79547-002	. PAN - Upper cockpit, outer		1

-Item not illustrated

When ordering, always specify Part Number, Description, and Serial Number of Aircraft

FIGURE ITEM	PART NUMBER	NOMENCLATURE	EFFECT FROM TO	UNITS PER ASSY
9-				
35	62656-000	. ANGLE ASSY - Door holder		1
36	79639-002	. PLATE - Door latch striker		1
-36A	603-335	. NUT - (MS21071L3K)		2
-36B	411-532	. SCREW - (MS35207-263)		2
-36C	79233-000	. SPLICE		1
-36D	189-625	. GROMMET		1
37	63037-000	LOOP ASSY - Forward door latch		1
38	69481-003	HAT ASSY - Windshield	3246001 thru 3246017	1
-38A	69481-004	HAT ASSY - Windshield	3246018 thru 3246087	1
-38B	69481-005	HAT ASSY - Windshield	3246088 thru 3246120 3257001 thru 3257063	1
-38C	69481-006	HAT ASSY - Windshield	3246121 and up 3257064 and up	1
39	68313-000	. FITTING - Windshield		1
40	69483-000	. BRACKET - Windshield hat, left		1
-40A	69483-001	. BRACKET - Windshield hat, right		1
41	78012-000	DOUBLER ASSY - Sta. 124.25		1
42	68315-000	CHANNEL - Upper cockpit, left		1
-42A	68315-001	CHANNEL - Upper cockpit, right		1
43	89090-003	GUSSET - Upper cockpit, left	3246018 and up	1
43	89090-003	. GUSSET - Upper cockpit, right	3257001 and up	1
44	68323-000	GUSSET - Upper cockpit, left		1
-44A	68323-001	GUSSET - Upper cockpit, right		1
45	68324-000	GUSSET - Upper cockpit, left		1
46	68344-000	GUSSET - Upper cockpit, left		1
47	68328-002	CHANNEL - Sta. 122 to Sta. 132, left		1
48	68330-006	WEB ASSY - Sta. 128, left		1
49	68332-000	FRAME ASSY - Sta. 128		1
50	68338-000	STIFFENER - Left side		2
51	68339-000	STIFFENER - Left side		1
52	68349-000	ANGLE - Upper cockpit, center, right		2
53	89090-002	GUSSET ASSY - Upper cockpit, right	3246018 and up 3257001 and up	1
54	68381-000	CHANNEL ASSY - Upper cockpit, center, left		1
55	68340-000	CHANNEL - Upper cockpit, center, left		1
-55A	68351-000	CHANNEL - Upper cockpit, center, right		1
56	68341-000	CHANNEL - Upper cockpit, center, left		1
-56A	68343-002	CHANNEL - Upper cockpit, center, right		1
57	67742-000	GUSSET - Upper cockpit		1
58	69748-000	CHANNEL - Upper cockpit	3246018 and up	1
59	62506-000	CLIP - Upper cockpit		5
60	402-060	BOLT - Eye, hinge (AN44-20A)		2
60A	690-619	WASHER - (NAS1149F0532P)		2
60B	404-531	NUT - (MS21042-5)		2
61	99422-002	CHANNEL - Armrest support		4
62	68363-000	CLIP		1
63	68362-000	CLIP		1
64	62506-003	CLIP - Upper cockpit		1
65	62506-004	CLIP - Upper cockpit		1
66	62697-002	CHANNEL ASSY - Upper fuselage		1
67	63900-046	BUSHING - Door hinge attachment, lower		1
-67A	63900-047	BUSHING - Door hinge attachment, upper		1
68	402-057	BOLT - Eye, door hinge attachment (AN44-17A)		2

-Item not illustrated

When ordering, always specify Part Number, Description, and Serial Number of Aircraft

FIGURE ITEM	PART NUMBER	NOMENCLATURE	EFFECT FROM TO	UNITS PER ASSY
9-				
-68A	690-619	WASHER - Door hinge attachment (NAS1149F0532P)		2
-68B	404-531	NUT - Door hinge attachment (MS21042-5)		2
69	68223-000	ANGLE - Upper cockpit, center		1
70	68319-000	GUSSET - Upper cockpit		2
71	68225-000	GUSSET - Upper cockpit		1
72	63900-046	BUSHING		2
73	68334-000	JAMB - Door, upper cockpit, center		1
74	87278-002	DOUBLER ASSY - Antenna	3246001 thru 3246125 3257001 thru 3257075	1
75	100587-050	PLATE ASSY - Door latch	3246018 and up 3257001 and up	1
75	100587-046	DOUBLER - Door latch	3246018 and up 3257001 and up	1
76	100587-056	PLATE - Door latch	3246018 and up 3257001 and up	1
-76A	100587-047	RECEPTACLE ASSY - Door latch	3246018 and up 3257001 and up	1
-76B	415-321	SCREW - (MS27039-1-11)	3246018 and up 3257001 and up	1
-76C	486-102	SCREW - (MS27039-1-16)	3246018 and up 3257001 and up	1
-76D	690-609	WASHER - (NAS1149F0332P)	3246018 and up 3257001 and up	2
-76E	687-210	SPACER - (NAS43HT3-19)	3246018 and up 3257001 and up	1

-Item not illustrated

When ordering, always specify Part Number, Description, and Serial Number of Aircraft

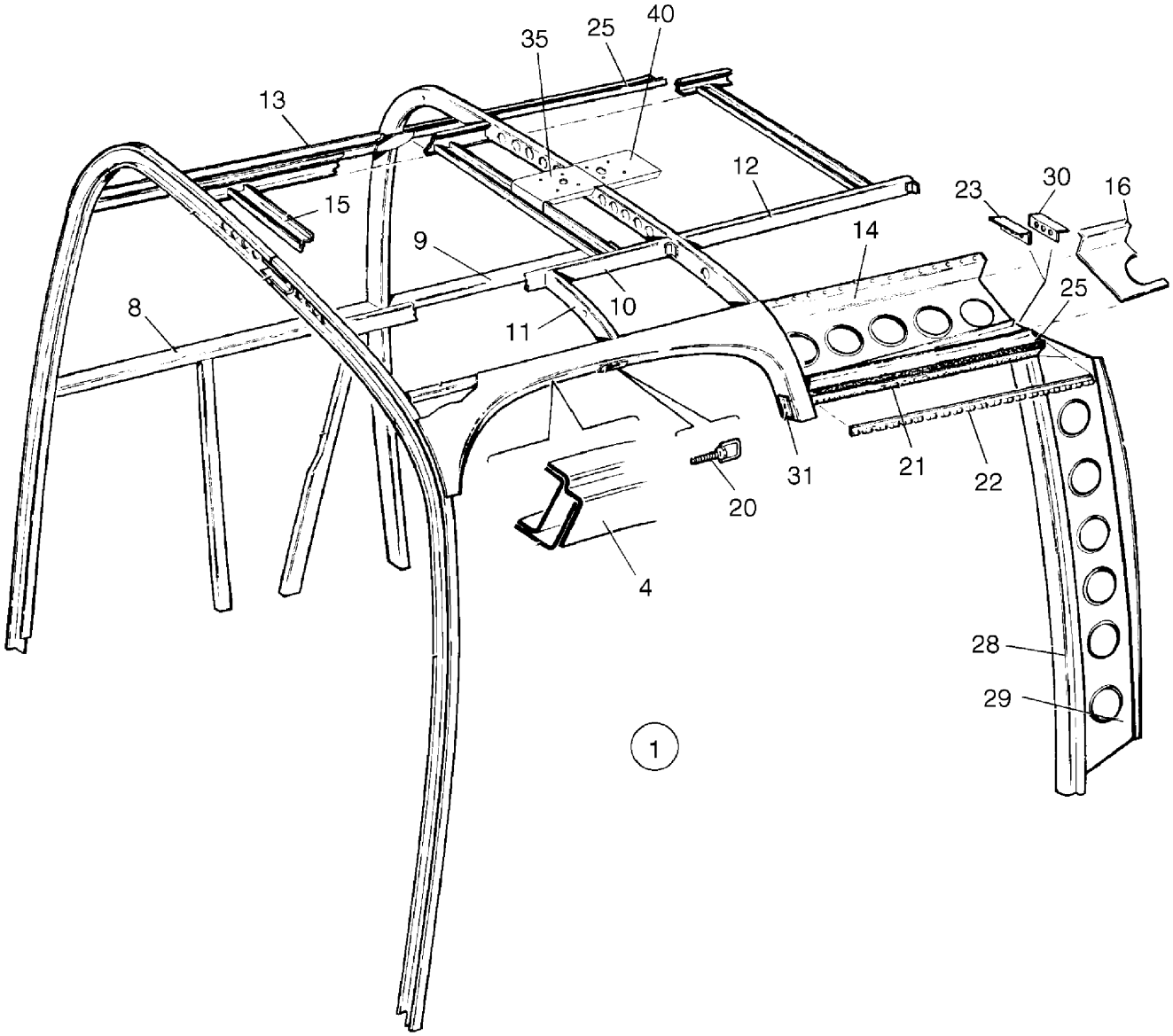

Figure 10. Fuselage Upper Aft Cockpit Assembly

FIGURE ITEM	PART NUMBER	NOMENCLATURE	EFFECT FROM TO	UNITS PER ASSY
10	38001 (FS)	DRAWING - Fuselage Assy	3246001 thru 3246017	1
	85517 (BJ)	DRAWING - Fuselage Assy	3246018 and up	1
	85517 (BJ)	DRAWING - Fuselage Assy	3257001 and up	1
1	38001-011	UPPER COCKPIT ASSY - Aft	3246001 thru 3246017	RF
-1A	85517-002	UPPER COCKPIT ASSY - Aft	3246018 thru 3246087	RF
-1B	85517-004	UPPER COCKPIT ASSY - Aft	3246088 AND up	RF
-1C	85517-003	UPPER COCKPIT ASSY - Aft	3257001 and up	RF
-2	68984-000	. CHANNEL - Sta. 165, left		1
-2A	68357-001	. CHANNEL - Sta. 165, right		1
-3	68359-000	. CHANNEL - Splice		1
4	69105-004	. SILL - Rear door		1
-5	69105-003	. SILL - Rear door		1
-6	68366-000	. CHANNEL - Rear door		1
-7	68353-000	. PLATE - Door latch		1
8	68375-000	. LONGERON - Upper cockpit, aft		1
9	68370-001	. LONGERON - Upper cockpit, aft, right		1
10	68371-000	. CHANNEL - Upper cockpit, aft, left		1
-10A	68371-001	. CHANNEL - Upper cockpit, aft, right		1
11	68372-000	. SUPPORT ASSY - Latch		1
12	68373-000	. LONGERON - Upper cockpit, aft, left		1
-12A	68373-001	. LONGERON - Upper cockpit, aft, right		1
13	39727-002	. CHANNEL - Upper cockpit		1
14	68966-002	. WEB - Cargo door, upper		1
15	69748-000	. CHANNEL - Upper cockpit		1
16	96851-002	. DOUBLER - Shoulder harness, left		1
-17	68333-000	. CHANNEL - Fuselage frame, left		1
-17A	68333-001	. CHANNEL - Fuselage frame, right		1
-18	68335-000	. CHANNEL- Splice		1
-19	68364-000	. CHANNEL - Upper cockpit		2
20	63037-000	LOOP ASSY - Aft door latch	3246001 thru 3246017	1
21	68967-000	STIFFENER - Cargo door, upper		1
22	68974-000	HINGE HALF - Cargo door		1
23	68986-002	CLIP - Cargo door web		1
-24	99729-001	ANGLE - Headlining attachment, right		1
25	68369-000	ZEE - Upper cockpit, aft, left		1
-25A	68369-001	ZEE - Upper cockpit, aft, right		1
-26	69971-002	CHANNEL - Armrest support		1
-27	69971-003	CHANNEL - Armrest support		1
28	68985-000	JAMB ASSY - Cargo door, aft		1
29	68970-000	WEB - Cargo door jamb stiffener		1
30	68986-003	CLIP - Cargo door web		1
31	96986-000	PLATE - Striker		1
-31A	96866-002	PLATE - Striker		1
35	87278-002	. DOUBLER ASSY - Antenna	3246018 thru 3246125 3257001 thru 3257075	1
40	99813-004	. DOUBLER ASSY - Antenna	3246126 and up 3257076 and up	1

-Item not illustrated

When ordering, always specify Part Number, Description, and Serial Number of Aircraft

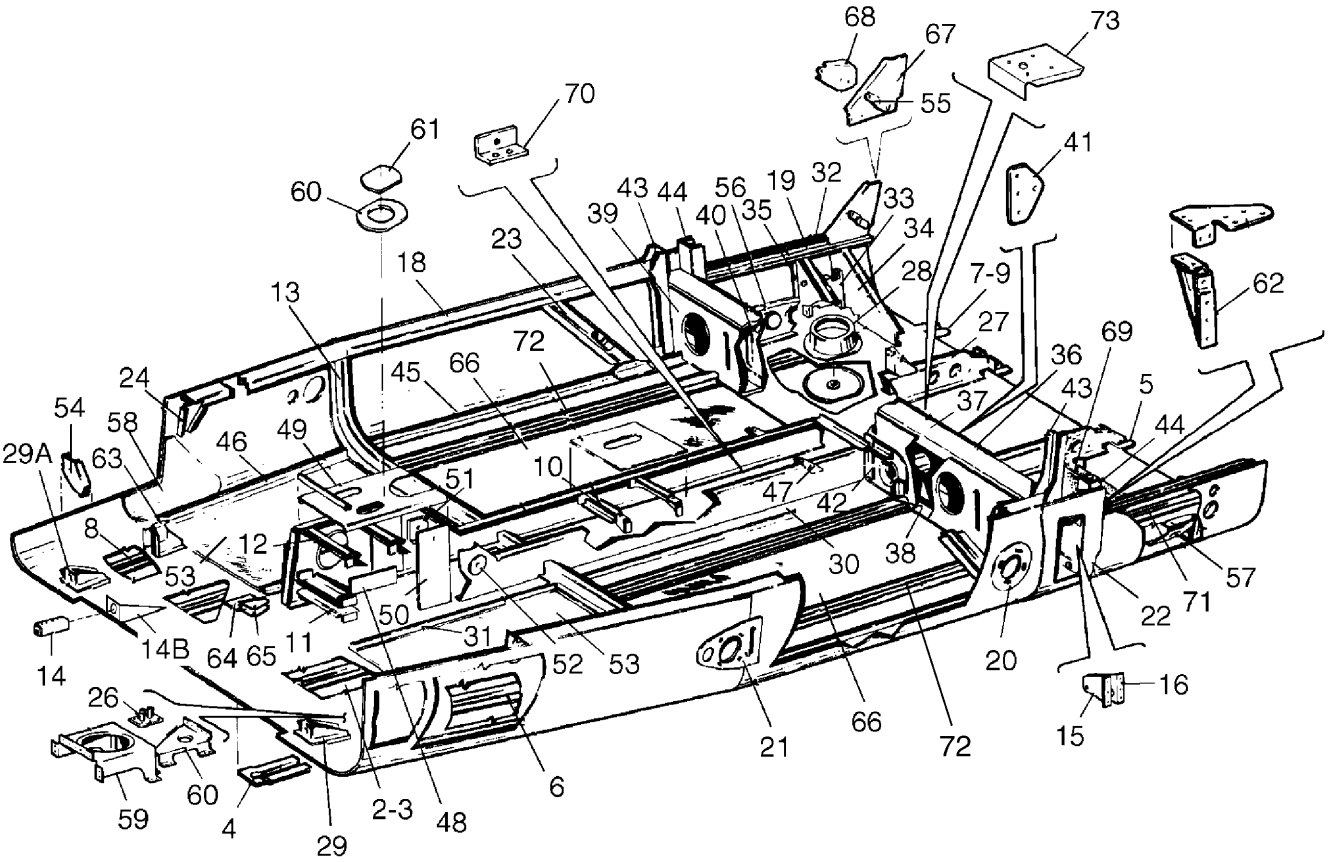

Figure 11. Fuselage Lower Forward Cockpit Assembly

FIGURE ITEM	PART NUMBER	NOMENCLATURE	EFFECT FROM TO	UNITS PER ASSY
11	38001 (FS)	DRAWING - Fuselage Assy	3246001 thru 3246017	
	85517 (BJ)	DRAWING - Fuselage Assy	3246018 and up	
	85517 (BJ)	DRAWING - Fuselage Assy	3257001 and up	
2	68501-007	. HAT ASSY - Inboard, left and right		2
3	68505-000	. . HAT		1
4	62543-000	. . FAIRING		1
-4A	62543-002	. . FAIRING (Used if air conditioning is installed)		1
5	68506-000	. . FAIRING		1
6	68502-000	. HAT - Front, left		1
-6A	62558-000	. FAIRING		1
7	68503-000	. FAIRING - Rear		1
8	68502-001	. HAT - Front, right		1
-8A	62558-001	. FAIRING		1
9	68503-001	. FAIRING - Rear		1
10	62679-000	. BRACKET ASSY - Tunnel, front		1
-10A	62679-001	. BRACKET ASSY - Tunnel, rear		1
11	62620-000	. BRACKET - Tunnel		2
12	62664-000	. ZEE ASSY - Tunnel		2
13	68525-000	. FRAME ASSY - Sta. 73		1
14	38041-000	. FITTING ASSY - Drag link, left		1
-14A	02867-002	. FITTING ASSY - Drag link, right		1
14B	02869-002	. DOUBLER		1
15	38136-000	. BRACKET - Pulley, aileron, forward left		1
-15A	38136-001	. BRACKET - Pulley, aileron, forward right		1
16	38136-008	. BRACKET - Pulley, aileron, rear left		1
-16A	38136-009	. BRACKET - Pulley, aileron, rear right		1
-17	68542-000	. PLATE - Tunnel, top		1
18	68504-000	. LONGERON - Left, outboard		1
-18A	68504-001	. LONGERON - Right, outboard		1
19	68508-001	. LONGERON - Right, rear, outboard		1
-19A	68508-002	. LONGERON - Left, rear, outboard		1
20	68539-000	. DOUBLER ASSY - Sta. 100		2
21	68540-000	. DOUBLER ASSY - Left, Sta. 73		1
-21A	68540-001	. DOUBLER ASSY - Right, Sta. 73		1
22	68507-002	. DOUBLER - Main spar box, left		1
-22A	95925-002	. DOUBLER - Main spar box, right		1
23	96890-000	. SUPPORT ASSY - Seat belt attachment, left		1
-23A	96890-001	. SUPPORT ASSY - Seat belt attachment,right		1
-23B	63976-070	. GROMMET		2
24	62581-001	. BRACKET - Lower assy, left		1
-24A	62581-000	. BRACKET - Lower assy, right		1
-25	68535-006	TUNNEL ASSY - Fuselage		
-25	68535-009	TUNNEL ASSY - Fuselage		
-25	68535-007	. CHANNEL ASSY - Fuselage	3246001 thru 3246158 3257001 thru 3257139	1
-25	68535-008	. CHANNEL ASSY - Fuselage	3246001 thru 3246158 3257001 thru 3257139	1
-25	68535-010	. CHANNEL ASSY - Fuselage	3246159 and up 3257140 and up	1
-25	68535-011	. CHANNEL ASSY - Fuselage	3246159 and up 3257140 and up	1
-25A	68541-000	. PLATE ASSY - Fuselage		1

-Item not illustrated

When ordering, always specify Part Number, Description, and Serial Number of Aircraft

FIGURE ITEM	PART NUMBER	NOMENCLATURE	EFFECT FROM TO	UNITS PER ASSY
11-				
-25B	62601-002	. PLATE ASSY - Fuselage		1
-25C	62602-000	. ANGLE - Fuselage		1
-25D	68739-000	. BRACKET ASSY - Fuselage		1
-25E	477-809	. NUT PLATE - (MS21059L08)		2
-25F	603-347	. RIVNUT - (MS27130A13K)		2
-25G	603-333	. NUT - (TINA1789-821)		31
-25H	587-654	. STUD - (XX10362-20-K1105)		2
-25J	406-865	. RIVNUT - (A8K106)		2
26	63909-000	. VENT ASSY - Battery	3246001 thru 3246017	1
27	62763-000	. SUPPORT - Torque shaft center		2
28	65071-000	. BASE ASSY - Fuel selector		1
29	68533-000	. FITTING - Lower engine mount, left		1
29A	68533-001	. FITTING - Lower engine mount, right		1
30	68538-000	. ANGLE - Heat duct attaching, rear		2
31	68537-000	. ANGLE - Heat duct attaching, front		2
32	68509-002	. ANGLE - Forward lower cockpit, left		1
-32A	68509-003	. ANGLE - Forward lower cockpit, right		1
33	62421-000	. FITTING - Flap, left		1
-33A	62421-001	. FITTING - Flap, right		1
34	68511-000	. BRACKET - Torque tube support, left		1
-34A	68511-001	. BRACKET - Torque tube support, right		1
35	68512-000	. BRACKET - Torque tube support, left		1
-35A	68512-001	. BRACKET - Torque tube support, right		1
-35B	401-266	. . BOLT - (AN3-5A)		3
-35C	401-269	. . BOLT - (AN3-10A)		1
-35D	690-612	. . WASHER - (NAS1149F0363P)		5
-35E	404-526	. . NUT - (MS21042-3)		4
36	38487-002	. BOX ASSY - Spar, lower cockpit		1
37	95732-000	. . CAP - Spar box, top		1
38	95733-000	. . CAP - Spar box, bottom		1
39	95825-003	. . WEB - Spar box, front		1
40	38486-002	. . WEB - Spar box, rear		1
41	95936-000	. . BRACKET - Flap return spring		1
42	68921-000	. . TUBE - Cabin heat		2
43	96330-003	. . CHANNEL - Spar box, left		1
-43A	62545-003	. . CHANNEL - Spar box, right		1
44	96339-000	. . CHANNEL - Frame, left		1
-44A	96339-001	. . CHANNEL - Frame, right		1
45	65657-002	. ANGLE - Panel reinforcement		2
46	65656-000	. ANGLE - Panel reinforcement, left		1
-46A	65656-001	. ANGLE - Panel reinforcement, right		1
47	96877-000	. ATTACHMENT - Seat belt, outboard, left		1
-47A	96878-000	. ATTACHMENT - Seat belt, inboard, left		1
-47B	96877-001	. ATTACHMENT - Seat belt, outboard, right		1
-47C	96878-001	. ATTACHMENT - Seat belt, inboard, right		1
48	68543-000	. PLATE - Tunnel, side		2
49	62601-002	. PLATE - Tunnel, top front		1
50	62606-000	. STIFFENER - Tunnel, side		2
51	62607-000	. PLATE - Tunnel, side		2
52	62608-000	. DOUBLER - Tunnel, side		2
53	96700-004	FLOORBOARD - Lower cockpit, forward, left		1
-53A	96700-005	FLOORBOARD - Lower cockpit, forward, right		1
54	68264-000	RIB - Lower cockpit, forward		1

-Item not illustrated

When ordering, always specify Part Number, Description, and Serial Number of Aircraft

FIGURE ITEM	PART NUMBER	NOMENCLATURE	EFFECT FROM TO	UNITS PER ASSY
11-				
55	96896-000	LINK - Seat belt attachment	3246001 thru 3246017	2
56	65126-000	STIFFENER - Lower cockpit, right		1
57	65126-001	STIFFENER - Lower cockpit, left		1
58	68531-000	DOUBLER - Right front, Sta. 49		1
59	38023-002	SUPPORT ASSY - Forward baggage		1
-59A	38023-000	SUPPORT - Forward baggage		1
60	38023-003	SUPPORT ASSY - Forward baggage		1
-60A	38023-008	SUPPORT - Forward baggage		1
61	68528-000	. GUSSET - Sta. 108, left	3246001 thru 3246017	1
-61A	96334-000	GUSSET - Sta. 108, left		1
-61B	68528-001	GUSSET - Sta. 108, right		1
-61C	96334-001	GUSSET - Sta. 108, right		1
62	96333-000	GUSSET - Floor support, left		1
-62A	96333-001	GUSSET - Floor support, right		1
63	69776-000	BRACKET ASSY - Rudder pedal stop. left		1
-63A	69776-001	BRACKET ASSY - Rudder pedal stop, right		1
64	38047-003	ANGLE ASSY - Mount, nose gear actuator		1
65	38047-005	FITTING - Mount, nose gear actuator		1
-65A	553-229	BOLT - (NAS144-12)		2
66	96684-000	FLOORBOARD - Lower cockpit, rear		2
67	96897-000	GUSSET - Seat belt attachment		1
68	96884-000	BRACKET ASSY - Seat belt attachment, left		1
-68A	96884-001	BRACKET ASSY - Seat belt attachment, right		1
69	38570-002	SUPPORT ASSY - Fuel pump		1
70	96041-000	ANGLE - Flap selector cable		1
71	96349-000	HAT - Lower cockpit, outboard, left	3246018 and up 3257001 and up	1
-71A	96349-001	HAT - Lower cockpit, outboard, right	3246018 and up 3257001 and up	1
72	62557-004	TRACK - Front Seat (Refer to Figure 38 for Seat Installation)		4
73	101312-002	DOUBLER ASSY - Antenna	3246126 and up 3257076 and up	1

-Item not illustrated

When ordering, always specify Part Number, Description, and Serial Number of Aircraft

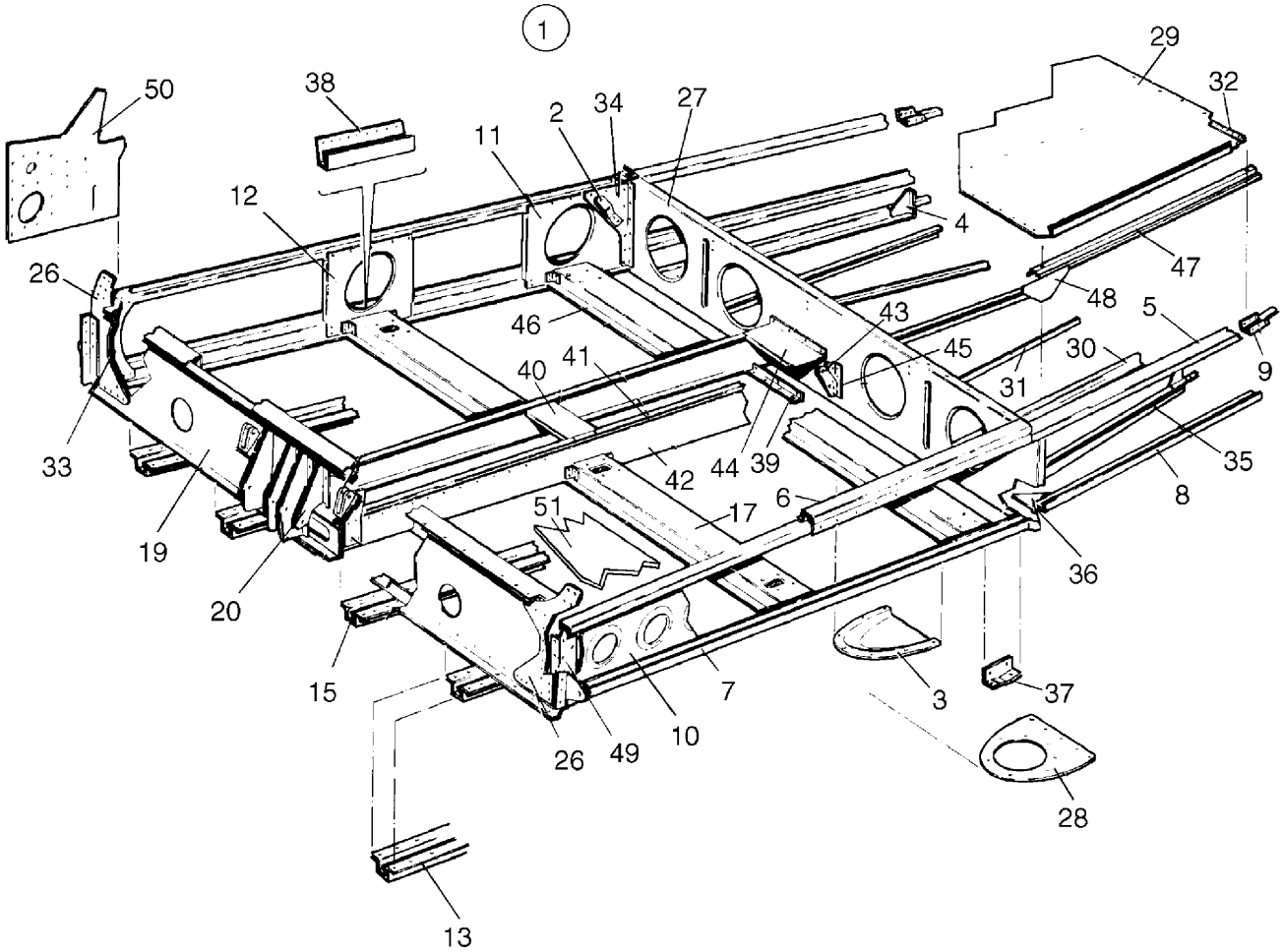

Figure 12. Fuselage Lower Aft Cockpit Assembly

FIGURE ITEM	PART NUMBER	NOMENCLATURE	EFFECT FROM TO	UNITS PER ASSY
12	38001 (FP)	DRAWING - Fuselage Assy	3246001 thru 3246017	
	85517 (BK)	DRAWING - Fuselage Assy	3246018 and up	
	85517 (BK)	DRAWING - Fuselage Assy	3257001 and up	
1	38001-001	LOWER COCKPIT ASSY - Aft	3246001 thru 3246017	RF
-1A	85517-002	LOWER COCKPIT ASSY - Aft	3246018 thru 3246087	RF
-1B	85517-004	LOWER COCKPIT ASSY - Aft	3246088 and up	RF
-1C	85517-003	LOWER COCKPIT ASSY - Aft	3257001 and up	RF
2	96896-002	. LINK - Seat belt attachment		2
3	66965-000	. SCOOP - Cabin exhaust vent		1
4	65119-000	. GUSSET - Baggage compartment, left		1
-4A	65119-001	. GUSSET - Baggage compartment, right		1
5	68603-000	. LONGERON ASSY - Left		1
-5A	68657-000	. LONGERON ASSY - Right		1
6	68604-004	. JAMB - Door		1
7	68605-000	. CHANNEL - Left		1
-7A	68605-001	. CHANNEL - Right		1
8	68606-000	. CHANNEL - Left		1
-8A	68606-001	. CHANNEL - Right		1
9	68634-000	. CHANNEL - Splice, left		1
-9A	68634-001	. CHANNEL - Splice, right		1
10	68607-003	. WEB ASSY - Left		1
11	68649-003	. WEB ASSY - Right		1
12	68655-002	. WEB - Right		1
13	68609-000	. HAT ASSY - Left, outboard		1
-13A	68609-001	. HAT ASSY - Right, outboard		1
-14	62554-000	. . FAIRING		1
15	68612-000	. HAT ASSY - Inboard		2
-16	62554-000	. . FAIRING		1
17	79583-002	. HAT ASSY - Seat support, left		1
-17A	79583-003	. HAT ASSY - Seat support, right		1
-18	68677-000	. . DOUBLER ASSEMBLY - Seat support		1
19	68615-005	FRAME ASSY		1
20	68474-000	. BRACKET		1
-21	62566-000	. FORWARD DOUBLER - Rear seat support		1
-22	68617-000	. STIFFENER - Frame, Sta. 128		1
-23	68618-000	. ANGLE - Frame, Sta. 128		1
-24	68619-000	. GUSSET - Sta. 128		1
-24A	68619-001	. GUSSET - Sta. 128		1
-25	96880-000	. FITTING - Seat belt attachment		2
26	68621-002	. FITTING ASSY - Wing attachment, left		1
-26A	68621-003	. FITTING ASSY - Wing attachment, right		1
27	68623-002	. FRAME ASSY		1
28	65556-000	. DOUBLER - Cabin exhaust scoop		1
29	69107-000	. PANEL - Cargo floor		1
30	68632-000	. ZEE ASSY - Baggage floor, left and center		2
-30A	68632-001	. ZEE ASSY - Baggage floor, right		1
31	68637-000	. ANGLE - Left		1
-31A	68637-001	. ANGLE - Right		1
32	68638-002	. ANGLE - Baggage floor, left		1
-32A	68638-001	. ANGLE - Baggage floor, right		1
33	68639-000	. GUSSET - Right		1
34	68640-002	. DOUBLER - Seat belt attachment, left		1
-34A	68640-003	. DOUBLER - Seat belt attachment, right		1

-Item not illustrated

When ordering, always specify Part Number, Description, and Serial Number of Aircraft

FIGURE ITEM	PART NUMBER	NOMENCLATURE	EFFECT FROM TO	UNITS PER ASSY
12-				
35	68641-000	. STIFFENER - Left		1
-35A	68641-001	. STIFFENER - Right		1
36	68642-000	. GUSSET - Baggage floor, left		1
-36A	68642-001	. GUSSET - Baggage floor, right		1
37	68643-000	. ANGLE - Left		1
-37A	68643-001	. ANGLE - Right		1
38	68678-000	. DOUBLER ASSY - Step		1
39	68629-000	. ANGLE ASSY - Cable guard, center		1
40	68656-000	. CHANNEL - Tunnel top		1
41	68647-000	. ANGLE ASSY - Tunnel side, left		1
-41A	68647-001	. ANGLE ASSY - Tunnel side, right		1
42	68608-000	. ANGLE - Aft tunnel wall, left		1
-42A	68608-001	. ANGLE - Aft tunnel wall, right		1
43	96885-000	. LINK - Seat belt, left	3246001 thru 3246087	1
-43A	96885-001	. LINK - Seat belt, right	3246001 thru 3246087	1
-43B	96885-002	. LINK - Seat belt, left	3246088 and up 3247001 and up	1
-43C	96855-003	. LINK - Seat belt, right	3246088 and up 3257001 and up	1
44	68652-000	. COVER - Aft tunnel		1
45	68625-002	. ANGLE - Tunnel wall attachment, left		1
-45A	68625-003	. ANGLE - Tunnel wall attachment, right		1
46	79747-000	. HAT ASSY - Seat support, left		1
-46A	79747-001	. HAT ASSY - Seat support, right		1
47	68972-000	. JAMB ASSY - Cargo door, lower		1
48	68975-000	. GUSSET - Cargo door, jamb		1
49	68644-000	. ANGLE - Left, Sta. 128		1
50	68645-000	. DOUBLER - Lower cockpit skin		2
51	69973-002	. FLOORBOARD ASSY - left		1
-51A	69973-003	. FLOORBOARD ASSY - right		1

-Item not illustrated

When ordering, always specify Part Number, Description, and Serial Number of Aircraft

THIS PAGE INTENTIONALLY LEFT BLANK

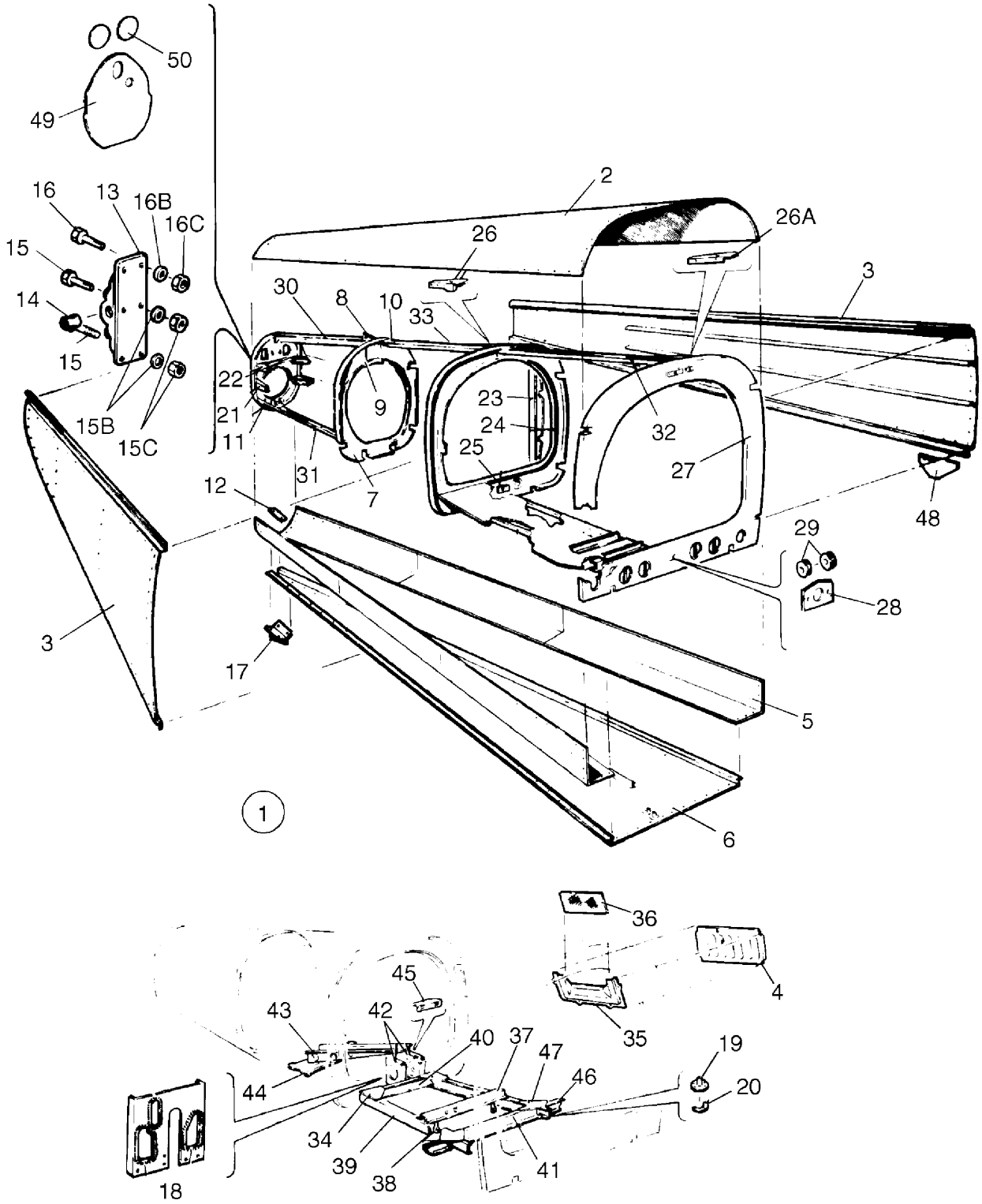

Figure 13. Fuselage Aft Section

FIGURE ITEM	PART NUMBER	NOMENCLATURE	EFFECT FROM TO	UNITS PER ASSY
13	99466 (AR)	DRAWING - Fuselage Assy, Aft Section		
1	99466-011	FUSELAGE ASSY - Aft section (When ordering, specify with or without provisions for air conditioning)	3246001 thru 3246087	1
-1A	99466-025	FUSELAGE ASSY - Aft section (When ordering, specify with or without provisions for air conditioning)	3246088 and up 3257001 and up	1
2	99468-005	. SKIN - Upper		1
3	99470-000	. SKIN ASSY - Side, left		1
-3A	99470-001	. SKIN ASSY - Side, right		1
-3B	99549-014	. SKIN ASSY - Side, left (Used if air conditioning is installed)		1
-3C	99549-007	. SKIN ASSY - Side, right (Used if air conditioning is installed)		1
4	99559-002	. . LOUVER - Air conditioning exhaust, left (Used if air conditioning is installed)		1
-4A	99559-001	. . LOUVER - Air conditioning exhaust, right (Used if air conditioning is installed)		1
5	99471-002	. SKIN - Lower, side, left		1
-5A	99471-003	. SKIN - Lower, side, right		1
6	99469-003	. SKIN ASSY - Lower center		1
-6A	99549-015	. SKIN ASSY - Lower center (Used if air conditioning is installed)		1
7	62444-005	. BULKHEAD ASSY - Fuselage, Sta. 259		1
8	62453-000	. . FITTING - Fin attachment		1
9	62753-000	. . BRACKET - Stabilator trim		1
10	79272-000	. . DOUBLER - Fin attachment		1
11	62445-000	. BULKHEAD ASSY - Fuselage, Sta. 286		1
12	62471-000	. SPACER - Tail skid		2
13	62645-004	. FITTING ASSY - Stabilator attachment		2
14	452-394	. . BEARING - (DW4K2-FS464)		2
-14A	553-266	. . BOLT - (428-3A7)		2
-14B	404-224	. . . NUT - (AN315-3R)		2
15	402-897	. BOLT - (NAS464P3A-4)		8
-15A	690-612	. WASHER - (NAS1149F0363P)		AR
15B	690-609	. WASHER - (NAS1149F0332P)		8
15C	404-556	. NUT - (MS21045-L3)		12
16	402-890	. BOLT - (NAS464P3A-5)		4
-16A	690-612	. WASHER - (NAS1149F0363P)		4
16B	690-609	. WASHER - (NAS1149F0332P)		4
16C	404-556	. NUT - (MS21045-L3)		4
17	66769-000	. SKID ASSY - Tail		1
18	76497-002	. PANEL ASSY - Fairlead (Used if air conditioning is installed)		1
19	99609-000	. VENT ASSY - Evaporator (Used if air conditioning is installed)		1
20	22482-000	. SCOOP - Evaporator vent (Used if air conditioning is installed)		1
21	62414-000	. FITTING ASSY - Bottom tail cone, left		1
-21A	62414-001	. FITTING ASSY - Bottom tail cone, right		1
22	62413-000	. FITTING ASSY - Top tail cone, left		1
-22A	62413-001	. FITTING ASSY - Top tail cone, right		1
23	68971-000	. CHANNEL - Cargo door web stiffener		1

-Item not illustrated

When ordering, always specify Part Number, Description, and Serial Number of Aircraft

FIGURE ITEM	PART NUMBER	NOMENCLATURE	EFFECT FROM TO	UNITS PER ASSY
13-				
24	62443-000	. BULKHEAD ASSY - Fuselage, Sta. 222		1
25	67249-000	. . FAIRLEAD		1
26	99813-002	. DOUBLER - Antenna, forward	3246001 thru 3246125	1
26A	99805-003	. DOUBLER - Antenna, aft	3246001 thru 3246125 3257001 thru 3257075	1
27	69106-000	. BULKHEAD ASSY - Fuselage, Sta. 187		1
28	62665-002	. . FAIRLEAD		4
29	62711-004	. . PULLEY		2
-29A	400-446	. . BOLT - (AN3-16A)		1
-29B	690-609	. . WASHER - (NAS1149F0332P)		1
-29C	690-613	. . WASHER - (NAS1149F0432P)		2
-29D	404-526	. . NUT - (MS21042-3)		1
30	62451-000	. HAT ASSY - Aft fuselage, top		1
31	62455-000	. HAT ASSY - Aft fuselage, bottom		1
32	65114-000	. STRINGER - Top, Sta. 187 to Sta. 222		1
33	79267-000	. STRINGER - Top, Sta. 222 to Sta. 259		1
34	99280-000	. GUSSET - Condenser frame, aft, left (Used if air conditioning is installed)		1
-34A	99280-001	. GUSSET - Condenser frame, aft, right (Used if air conditioning is installed)		1
35	99615-000	. COVER - Air conditioning exhaust louver, left (Used if air conditioning is installed)		1
-35A	99615-000	. COVER - Air conditioning exhaust louver, right (Used if air conditioning is installed)		1
-35A	99615-001	. COVER - Air conditioning exhaust louver, right (Used if air conditioning is installed)		1
36	99631-000	. FILTER - Air conditioning exhaust (Used if air conditioning is installed)		2
37	99496-000	. BRACKET ASSY - Condenser door actuation (Used if air conditioning is installed)		1
38	99561-000	. . BEARING ASSY - Condenser door actuation (Used if air conditioning is installed)		2
39	99272-000	. CHANNEL - Condenser door frame (Used if air conditioning is installed)		2
40	99273-000	. STIFFENER - Condenser door frame (Used if air conditioning is installed)		1
41	99278-003	. ZEE ASSY - Condenser door frame (Used if air conditioning is installed)		1
42	99552-000	. BRACKET ASSY - Condenser door bellcrank, left (Used if air conditioning is installed)		1
-42A	99552-002	. BRACKET ASSY - Condenser door bellcrank, right (Used if air conditioning is installed)		1
43	99558-000	. BRACKET - Motor mount condenser actuator (Used if air conditioning is installed)		1
44	99545-000	. BRACKET - Motor support (Used if air conditioning is installed)		1
45	99555-000	. BRACKET - Brace (Used if air conditioning is installed)		1
46	99487-000	. BRACE - Condenser frame, left (Used if air conditioning is installed)		1
-46A	99487-001	. BRACE - Condenser frame, right (Used if air conditioning is installed)		1

-Item not illustrated

When ordering, always specify Part Number, Description, and Serial Number of Aircraft

FIGURE ITEM	PART NUMBER	NOMENCLATURE	EFFECT FROM TO	UNITS PER ASSY
13-				
47	99488-000	. GUSSET - Condenser frame, forward (Used if air conditioning is installed)		2
48	68991-000	GUSSET - Aft lower cargo hatch		1
49	65494-000	PLATE ASSY - Aft fuselage closeout		1
50	63078-006	SEAL - Closeout		2
-51	67367-003	BATTERY SHELF ASSY - Aft fuselage	3246001 thru 3246087	1
-51	100914-002	BATTERY SHELF ASSY - Aft fuselage	3246088 thru 3246125 3257001 thru 3257075	1
-51	100914-003	BATTERY SHELF ASSY - Aft fuselage	3246126 and up 3257076 and up	1
-52	99466-026	AFT FUSELAGE ASSY - (Optional)	3246182 and up	1
-52	99466-026	AFT FUSELAGE ASSY - (Optional)	3257144	1
-52	99466-026	AFT FUSELAGE ASSY - (Optional)	3257199 and up	1

-Item not illustrated

When ordering, always specify Part Number, Description, and Serial Number of Aircraft

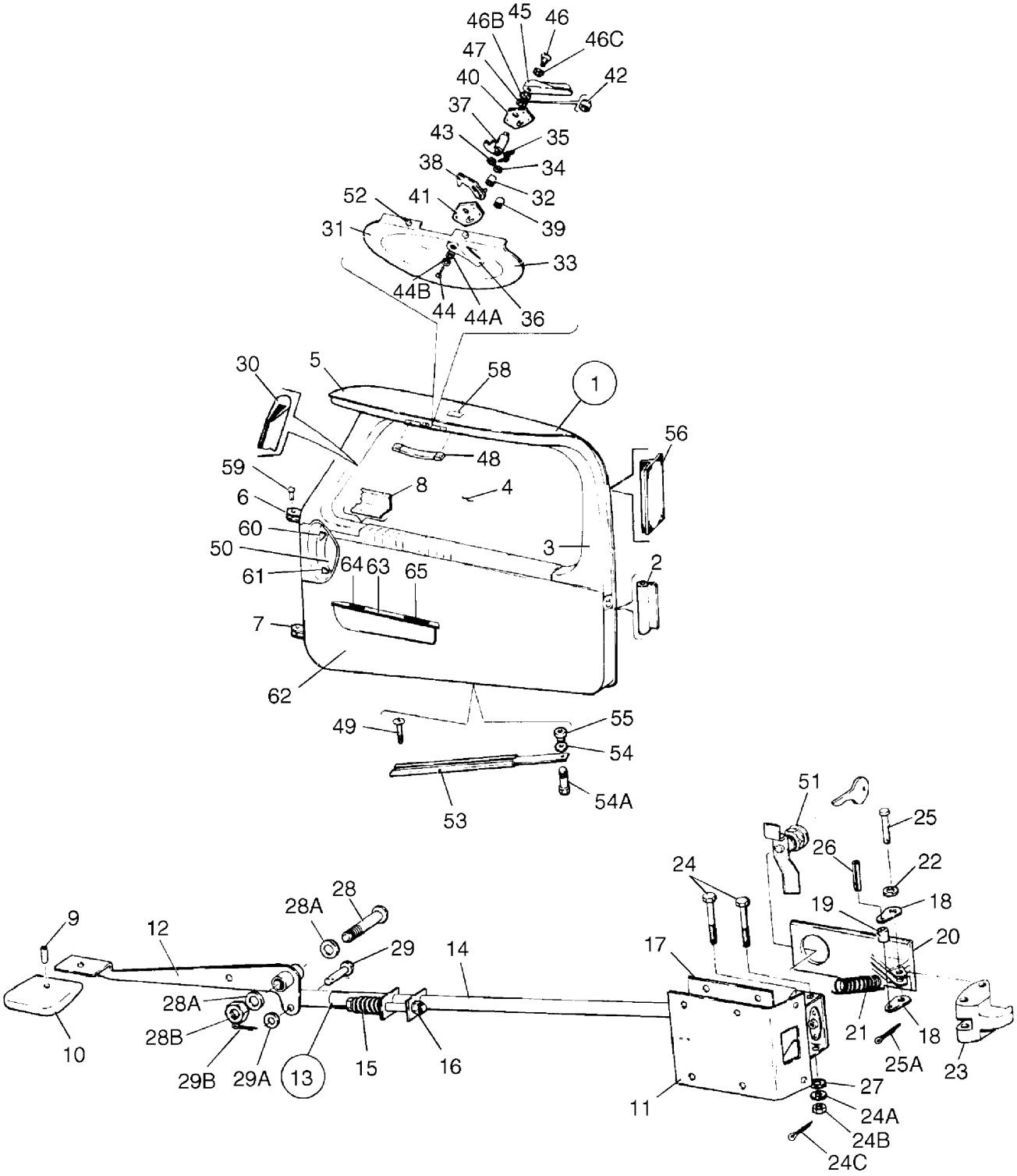

Figure 14. Fuselage Forward Cabin Door

FIGURE ITEM	PART NUMBER	NOMENCLATURE	EFFECT FROM TO	UNITS PER ASSY
14	79546 (BB)	DRAWING - Doors Installation		
	36722 (K)	DRAWING - Door Snubber Installation		
	85210 (BI)	DRAWING - Interior Details		
1	79545-014	DOOR ASSY - Complete	3246001 thru 3246017	1
-1A	79545-016	DOOR ASSY - Complete	3246018 thru 3246087	1
-1B	79545-018	DOOR ASSY - Complete, forward cabin	3246088 and up 3257001 and up	1
-1C	79475-092	DOOR ASSY - Complete, forward cabin	3246001 thru 3246017	1
2	189-139	. MOULDING - Cabin door (bulb type)		13
3	79542-018	. COVER - Cabin door upper		1
4	79475-057	. WINDOW - Cabin door (.125 thick) tinted		1
5	79475-048	. DOOR ASSY - Cabin		1
		(Less window and lock assy)		1
6	79475-007	. . HINGE - Cabin door, upper		1
7	79475-008	. . HINGE - Cabin door, lower		1
8	79475-009	. . RETAINER - Window		1
9	419-967	. . SCREW - Set (1/4 - 28 x 1/4" Lg)		1
-9A	486-145	. . SCREW - Set (1/4 - 20 x 1/4" Lg)		1
10	79647-002	. . KNOB - Door handle		1
11	79515-035	. . COVER - Cabin door latch		1
12	79515-013	. . HANDLE ASSY - Cabin door		1
13	79515-003	. . LATCH ASSY - Door	3246001 thru 3246017	1
-13A	79515-070	. . LATCH ASSY - Door	3246018 and up 3257001 and up	1
14	79515-005	. . . TUBE ASSY - Door latch	3246001 thru 3246017	1
-14A	79515-071	. . . TUBE ASSY - Door latch	3256018 and up 3257001 and up	1
15	587-398	. . . . SPRING - Door latch tube		1
16	400-113	. . . . BOLT - (AN4-10)		1
-16A	690-611	. . . . WASHER - (NAS1149F0463P)		3
-16B	404-101	. . . . NUT- (AN310-4)		1
-16C	424-051	. . . . COTTER PIN - (MS24665-132)		1
17	79515-007	. . . BOX ASSY - Door latch	3246001 thru 3246017	1
-17A	79515-072	. . . BOX ASSY - Door latch	3246018 and up	1
-17B	79515-072	. . . TUBE ASSY - Door latch	3246018 and up	1
18	79515-008	. . . LINK - Door latch mechanism		2
19	79515-015	. . . BUSHING - Door latch mechanism		1
20	79530-002	. . . HANDLE - Door latch mechanism		1
21	587-381	. . . SPRING		2
22	62833-105	. . . WASHER - Door latch mechanism	3246001 thru 3246017	1
-22A	62833-005	. . . WASHER	3246018 and up 3257001 and up	1
23	79532-002	. . . LATCH - Cabin door		1
24	400-665	. . . BOLT - (AN21-31)		2
24A	690-640	. . . WASHER - (NAS1149FN632P)		2
24B	404-391	. . . NUT - (AN320-1)		2
24C	424-041	. . . COTTER PIN - (MS24665-5)		2
25	424-178	. . . PIN - (MS20392-2C-19)		1
25A	424-041	. . . COTTER PIN - (MS24665-5)		1
26	480-800	. . . PIN - Spring (MS9048-111)		1
27	690-639	. . . WASHER - (NAS1149FN616P)		2
28	400-668	. . . BOLT - (AN23-26)		1
28A	690-609	. . . WASHER - (NAS1149F0332P)		4

-Item not illustrated

When ordering, always specify Part Number, Description, and Serial Number of Aircraft

FIGURE ITEM	PART NUMBER	NOMENCLATURE	EFFECT FROM TO	UNITS PER ASSY
14-				
28B	404-392	. . . NUT - (AN320-3)		1
-28C	424-051	. . . COTTER PIN - (MS24665-132)		1
29	424-141	. . . PIN - (MS20392-IC-9)		1
29A	690-640	. . . WASHER - (NAS1149FN632P)		2
29B	424-041	. . . COTTER PIN - (MS24665-5)		1
30	99997-000	. EXTRUSION - Vinyl		7'
31	36598-002	. LATCH ASSY - Door, auxiliary		1
32	36572-003	. . ROLLER - Door latch (3/8 O.D.)	3246001 thru 3246017	1
33	79475-034	. . PAN - Door latch	3246001 thru 3246017	1
34	690-642	. . WASHER - (NAS1149C0432R)	3246001 thru 3246017	1
35	63045-000	. . SPRING - Door latch	3246001 thru 3246017	1
36	36590-002	. . HANDLE - Door, auxiliary		1
37	63042-003	. . CAM - Door latch	3246001 thru 3246017	1
38	63036-004	. . HOOK ASSY - Door latch (with ¼ O.D. welded stud)	3246001 thru 3246017	1
39	63900-050	. . BUSHING	3246001 thru 3246017	3
-39A	414-774	. SCREW - (MS24693-S54)	3246001 thru 3246017	3
-39B	404-529	. NUT - (MS21042-08)	3246001 thru 3246017	3
-39C	690-618	. WASHER - (NAS1149FN816P)	3246001 thru 3246017	3
40	68179-007	. . PLATE - Door latch	3246001 thru 3246017	1
41	68179-008	. . PLATE - Door latch	3246001 thru 3246017	1
42	63913-076	. . HOSE	3246001 thru 3246017	1
43	690-647	. . WASHER - (NAS1149C0863R)	3246001 thru 3246017	1
44	519-853	. . SCREW - (MS24622-43)		1
44A	62833-107	. . WASHER - Teflon	3246001 thru 3246017	1
44B	407-680	. . WASHER - (AN960-C816)		1
45	63039-000	. HANDLE - Door, auxiliary latch	3246001 thru 3246017	1
46	519-853	. SCREW - (MS24622-43)		1
-46A	520-056	. SCREW - (MS51861-45C)	3246001 thru 3246017	1
46B	62833-107	. WASHER - Teflon	3246001 thru 3246017	1
46C	407-680	. WASHER - (AN960-C816)		1
-46D	690-605	. . WASHER - (62833-101)	3246001 thru 3246017	1
		(Use P/N 62833-107 washer 1 max under handle when required for clearance with pan)	3246001 thru 3246017	
47	62833-021	. WASHER - Neoprene		1
48	464-412	. HANDLE - Door, assist		1
49	419-594	. SCREW - (AN530-10R36)		2
50	79542-019	. PAN - Door latch (When ordering, specify color)		1
51	87329-007	LOCK ASSY - Cabin door (If matching ignition switch and door locks are desired order kit 87329-04)		1
-51A	100586-008	LOCK ASSY	3246001 thru 3246017	
-51B	100586-010	LOCK ASSY	3246001 thru 3246017	
-51C	100586-012	LOCK ASSY	3246001 thru 3246017	
-51D	688-178	IGNITION SWITCH	3246001 thru 3246017	
52	453-856	BUMPER		2
53	95507-005	DOOR HOLDER ASSY	3246001 thru 3246017	2
53	65727-000	DOOR HOLDER ASSY	3246018 and up 3257001 and up	2
54	62833-039	WASHER - Door holder (neoprene)		2
54A	400-862	BOLT - (AN23-10A)		
55	63020-002	BUSHING - Door holder		2

-Item not illustrated

When ordering, always specify Part Number, Description, and Serial Number of Aircraft

FIGURE ITEM	PART NUMBER	NOMENCLATURE	EFFECT FROM TO	UNITS PER ASSY
14-				
56	36722-004	SEAL - Door snubber (150” long)		1
-57	400-862	BOLT - (AN23-10A)		2
58	87334-002	PLACARD - Door release (See Figure 81)		RF
59	424-204	PIN - (MS20392-3C13)		2
-59A	690-613	WASHER - (NAS1149F0432)		4
-59B	424-051	COTTER PIN - (MS24665-132)		2
-59C	424-203	. PIN - (MS20392-3C15)		AR
-59D	690-611	. WASHER - (NAS1149F0463P)		AR
60	69669-117	PLACARD - Open (See Figure 81)		RF
61	69669-118	PLACARD - Latch (See Figure 81)		RF
62	85210-008	PANEL - Forward cabin door, lower		1
62	85210-241	LOWER PANEL ASSY	3246088 and up 3257001 and up	1
-62A	419-939	. SCREW - (4x3/4 Lg, Type A)	3246001 thru 3246087	5
-62B	416-778	. SCREW - (MS35191-270)	3246001 thru 3246087	2
-62C	419-678	. SCREW	3246088 and up	5
-62D	410-100	. SCREW - (MS24694S48)	3246088 and up	2
-62E	419-678	. SCREW	3257001 and up	5
-62F	410-100	. SCREW - (MS24694S48)	3257001 and up	2
-62G	79545-005	. SEAL	3246001 thru 3246017	
63	85210-075	ARMREST ASSY		1
-63A	85210-079	. COVER		1
64	89548-014	ASHTRAY		1
-64A	572-571	FIREBOX		1
65	85210-007	COVER - Trim, door closure		1
-65A	690-616	. WASHER - (NAS1149FN832P)		2
-65B	415-544	. SCREW - (MS35206-244)		AR
-65C	419-683	. SCREW - (4x1/2 Lg, Type A)		AR
-66	79475-107	. DOOR ASSY	3246018 and up 3257001 and up	1
-66A	85210-196	. UPPER PANEL ASSY	3246018 and up 3257001 and up	1
-66B	79545-017	. SEAL - (Make from 100802-2 extrusion)	3246018 and up 3257001 and up	1
-67	85210-090	. UPPER PANEL ASSY	3246001 thru 3246017	1
-67A	85210-101	. LOWER PANEL ASSY	3246001 thru 3246087	1
-67B	85210-155	. COVER ASSY	3246001 and up	1
-67B	85210-155	. COVER ASSY	3257001 and up	1
-67C	455-002	. PUSH FASTENER - (N09-190001)		3

-Item not illustrated

When ordering, always specify Part Number, Description, and Serial Number of Aircraft

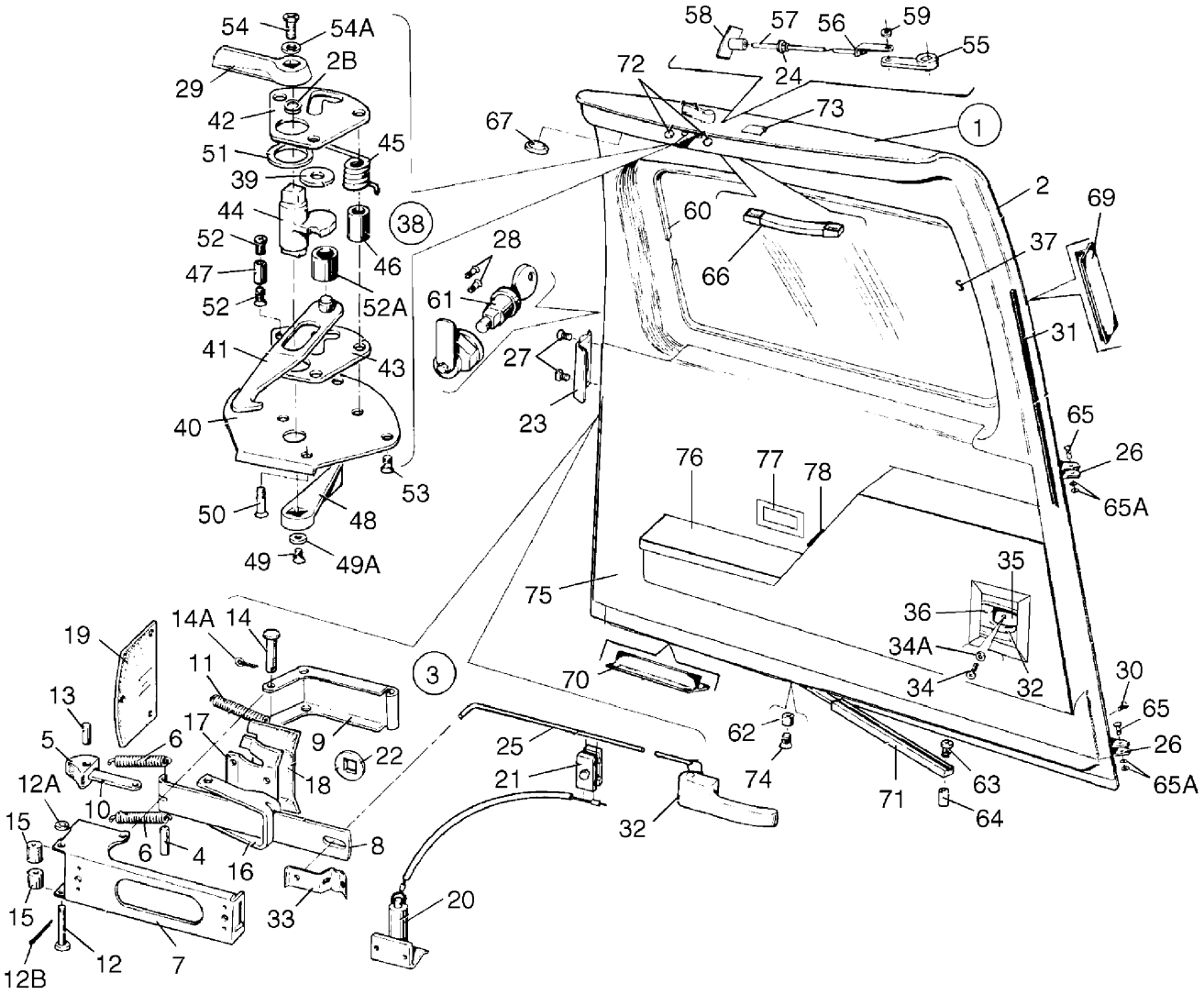

Figure 15. Fuselage Aft Cabin Door

FIGURE ITEM	PART NUMBER	NOMENCLATURE	EFFECT FROM TO	UNITS PER ASSY
15	79546 (AZ)	DRAWING - Doors Installation		
	36722 (K)	DRAWING - Door Snubber Installation		
	85210 (BN)	DRAWING - Interior Details		
1	96981-011	DOOR ASSY - Cabin, aft (Door assy includes auxiliary latch assy, lock assy, armrest, and trim panel are not included)	3246001 thru 3246087 3246182 and up	1
1	96981-011	DOOR ASSY - Cabin, aft	3257199 and up	1
1	96981-012	DOOR ASSY - Cabin, aft	3246088 thru 3246181 3257001 thru 3257198	1
2	96995-009	. DOOR ASSY - Cabin, aft		1
-2A	96995-010	. OUTER SKIN ASSY		1
2B	434-138	. . GROMMET - (MS35489-17)		1
3	68188-002	. LATCH ASSY - Door		1
4	14627-003	. . PIN - Door latch		1
5	69224-000	. . TONGUE ASSY - Door latch		1
6	14635-002	. . SPRING		2
7	79434-000	. . HOUSING ASSY - Door latch		1
8	100607-002	. . PLATE ASSY		1
9	79594-000	. . PLATE		1
-9A	21172-002	. . PLATE - (Optional)		1
10	81262-068	. . LINK		1
11	83302-043	. . SPRING		1
12	424-163	. . PIN - (MS20392-1C53)		1
12A	690-640	. . WASHER - (NAS1149FN632P)		1
12B	424-051	. . COTTER PIN - (MS24665-132)		1
13	480-694	. . ROLL PIN - (ESN59-028-125-0562)		1
14	424-162	. . PIN - (MS20392-1C49)		1
14A	424-051	. . COTTER PIN - (MS24665-132)		1
-14B	690-640	. . WASHER - (NAS1149FN632P)		1
15	14843-090	. . BUSHING		2
16	66641-000	. . PLATE - Door latch stop		1
17	21843-000	. . PLATE - Seal support		1
18	21844-000	. . SEAL		1
19	21478-000	. . SEAL		1
20	96863-006	. ACTUATOR ASSY - Door latch, lower		1
21	96864-000	. CLAMP - Lower door latch		2
-21A	96992-000	. . CLIP		1
-21B	454-887	. . CLAMP		3
-21C	486-271	. . SCREW - (MS35207-264)		3
-21D	690-612	. . WASHER - (NAS1149F0363P)		2
-21E	404-526	. . NUT		1
22	21176-000	. SPACER - Door lock		1
23	68187-000	. PLATE - Trim, latch		1
24	404-224	. NUT - (AN315-3R)		1
25	485-129	. ROD - Door latch		1
26	68174-000	. HINGE - Aft cabin door		2
27	414-673	. SCREW - (MS24693-S50)		2
-27A	477-640	. NUT		AR
28	415-518	. SCREW - (MS35206-228)		4
29	63039-000	. HANDLE - Door, auxiliary		1
30	415-535	. SCREW - (MS35206-245)		12
-30A	407-120	. LOCK WASHER - (AN936-B8)		12
31	19063-002	. MOULDING - Door seal (quarter-round type)		13

-Item not illustrated

When ordering, always specify Part Number, Description, and Serial Number of Aircraft

FIGURE ITEM	PART NUMBER	NOMENCLATURE	EFFECT FROM TO	UNITS PER ASSY
15-				
-31A	189-139	. MOULDING - Door seal (bulb type)		13
32	464-142	. HANDLE - Door, left		1
33	587-221	. SPRING - Pull rod		1
34	486-160	. SCREW		1
34A	494-141	. WASHER		1
35	581-489	. PLATE - Trim, black		1
36	459-441	. ESCUTCHEON		1
37	99069-004	. WINDOW - Cabin door, aft (.125 thick) tinted		1
38	96993-002	. LATCH ASSY - Aft cabin door, auxiliary		1
-38A	520-056	. . SCREW - (MS24622-43)		1
-38B	419-683	SCREW - (#4x1/2 Lg, Type A)		16
-38C	189-749	TAPE TYPE 1 - (PMS-K0003)		AR
39	690-613	. . WASHER - (NAS1149F0432P)		1
40	68186-002	. . PAN - Door latch		1
41	68176-003	. . HOOK ASSY - Door latch		1
42	68179-006	. . PLATE - Door latch		1
43	68179-005	. . PLATE - Door latch		1
44	68178-003	. . CAM - Door latch		1
45	63045-000	. . SPRING - Door latch		1
46	63900-050	. . BUSHING		2
47	96996-000	. . BUSHING		1
48	464-029	. . HANDLE - Door, auxiliary (white)(63039-000)		1
-48A	62833-107	. WASHER		1
49	519-853	. . SCREW - (MS24622-43)		1
49A	690-619	. . WASHER - (NAS1149F0532P)		1
50	414-769	. . SCREW - (MS24693-S53)		2
-50A	404-833	. . NUT - (MS20364-832C)		2
51	407-569	. . WASHER - (AN960-816)		1
52	414-777	. . SCREW - (MS24693-S47)		2
52A	36572-003	. . ROLLER - Door latch (3/8 O.D.)		1
53	414-761	. SCREW - (MS24693-S48)		3
54	519-853	. SCREW - (MS24622-43)		1
54A	62833-101	. WASHER		1
55	96999-000	. ARM ASSY - Aft cabin door		1
56	96984-000	. ROD ASSY - Door latch, aft		1
-56A	401-266	. . BOLT - (AN3-5A)		1
57	96868-000	. PIN - Upper door latch		1
58	96991-000	. GUIDE ASSY - Aft door top latch		1
59	484-830	. RING - (5115-25ZD)		1
60	99070-000	. RETAINER - Window		1
61	87329-011	LOCK ASSY - Aft cabin door (If matching ignition switch and door locks are desired, order kit 87329-004)		1
-61A	100586-008	LOCK ASSY	3246001 thru 3246017	1
-61B	100586-010	LOCK ASSY	3246001 thru 3246017	1
-61C	100586-012	LOCK ASSY	3246001 thru 3246017	1
-61D	688-178	IGNITION SWITCH	3246001 thru 3246017	1
-61E	96865-000	CLIP		1
62	63020-002	BUSHING - Door holder		1
63	400-870	BOLT - Clevis (AN23-18A)		1
64	63900-025	BUSHING - Door holder		1
65	424-204	PIN - (MS20392-3C13)		2
65A	690-613	WASHER - (NAS1149F0432P)		4

-Item not illustrated

When ordering, always specify Part Number, Description, and Serial Number of Aircraft

FIGURE ITEM	PART NUMBER	NOMENCLATURE	EFFECT FROM TO	UNITS PER ASSY
15-				
-65B	424-051	COTTER PIN - (MS24665-132)		2
66	464-412	HANDLE - Door, assist		1
67	453-674	PLUG - Button		1
-68	78085-017	COVER - Window trim		1
69	36722-008	SEAL - Door snubber (100” long)		1
70	36722-009	SEAL - Door snubber (60” long)		1
71	65727-000	HOLDER ASSY - Door		1
72	453-856	BUMPER - Door		2
73	87335-002	PLACARD - Door release (See Figure 81)		RF
74	400-669	BOLT - Clevis (AN23-9A)		1
75	85210-071	PANEL ASSY - Aft cabin door, lower		1
-75A	85210-073	. FABRIC		1
-75B	69471-002	. INSULATION		1
-75C	69471-003	. INSULATION		1
-75D	69972-004	. CHANNEL ASSY		1
-75E	477-692	. . WALL GRIP NUT - (Star Expansion Corp)		4
-75F	49982-027	. BUSHING	3246001 thru 3246181	4
-75G	690-609	. WASHER	3246001 thru 3246181	1
-75H	477-701	. NUT	3246001 thru 3246087 3246182 and up	4
-75J	401-279	. BOLT - Machine (AN3-25A)	3246001 thru 3246087 3246182 and up	4
76	85210-060	. ARMREST ASSY		1
-76A	85210-066	. . COVER		1
77	584-402	. RECEPTACLE - Ashtray (E83B-5404788-AW)		1
78	85210-006	. SWITCH ASSY - Light		1
-78A	89908-003	. . SWITCH ASSY		1
-78B	85210-070	. . COVER		1
-78C	69669-200	. . PLACARD - (See Figure 81)		RF
-79	85285-002	BRACKET ASSY		1
-79A	415-631	. SCREW - (MS35206-331)		1
-80	85365-003	EXTRUSION		1

-Item not illustrated

When ordering, always specify Part Number, Description, and Serial Number of Aircraft

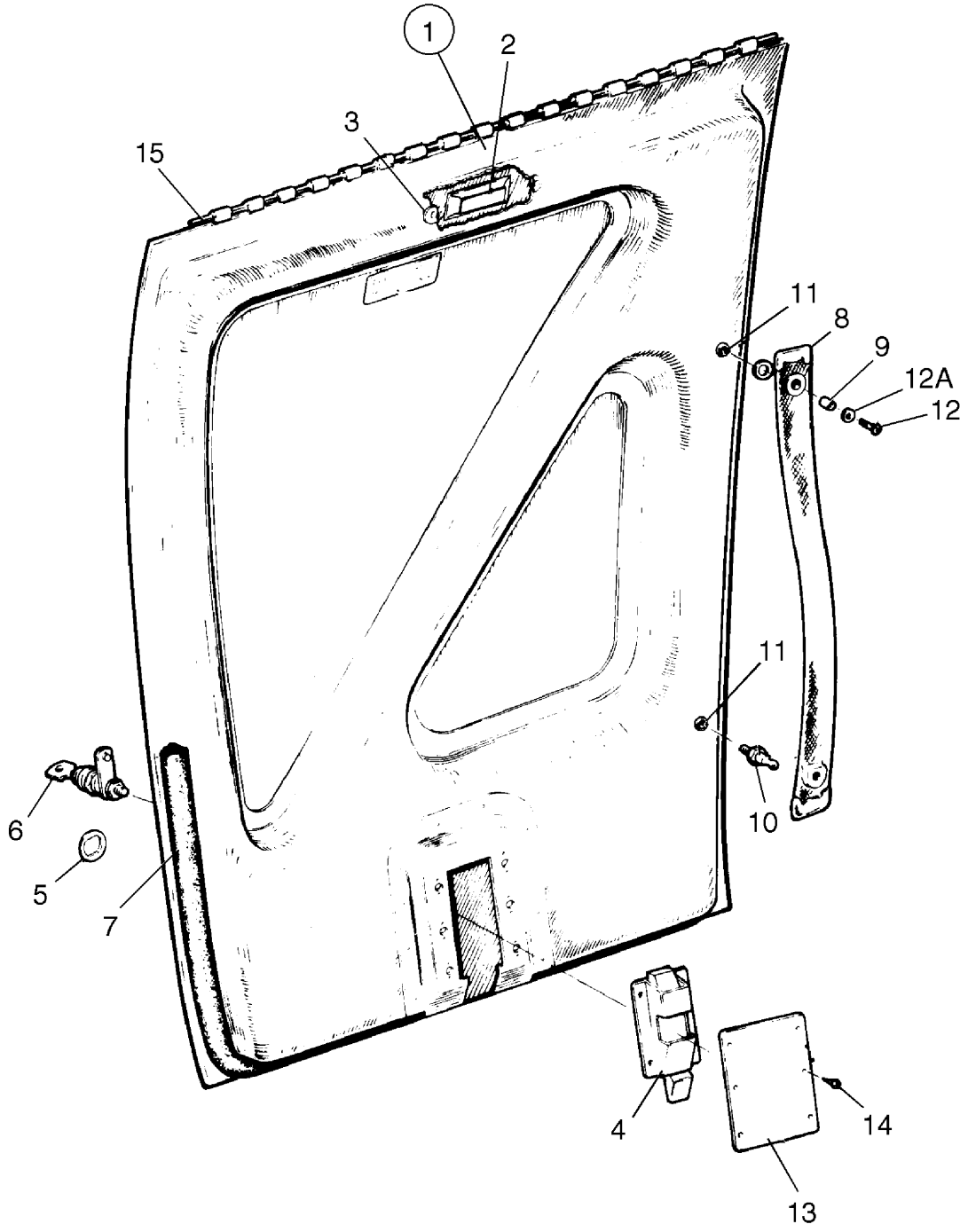

Figure 16. Fuselage Forward Baggage Door

FIGURE ITEM	PART NUMBER	NOMENCLATURE	EFFECT FROM TO	UNITS PER ASSY
16	79546 (AZ)	DRAWING - Doors Installation		
1	69853-006	DOOR ASSY - Forward baggage (bonded) (less lock assy)		1
-1A	69853-007	. DOOR ASSY - Forward baggage (bonded)		1
-1B	68268-004	. HINGE - Half		1
-1C	68853-008	. SKIN ASSY		1
-1D	68853-010	. PAN ASSY		1
-1E	69853-008	. . DOOR ASSY - Forward baggage		1
-1F	69853-003	. . . SKIN ASSY		1
-1G	69854-000	. . . DOUBLER		1
-1H	69853-010	. . . DOOR ASSY - Forward baggage		1
-1J	69853-005	. . . . DOUBLER		2
-1K	69887-000	. . . . LATCH HOUSING		1
-1L	690-637	. . . . WASHER - (NAS1149FN316P)		2
-1M	69853-011	. . . . PAN - Inner		1
-1N	69853-012	. SEAL		1
-1P	69853-013	. SEAL		1
-1Q	69853-014	. SEAL		1
2	474-107	. MAGNET		1
3	37996-002	. COVER - Magnet		1
4	472-077	. LATCH - Trigger action (incorporates rectangular push button)		1
5	21176-000	. SPACER - Door lock		1
6	87329-009	. LOCK ASSY - Baggage door (If matching ignition switch and door locks are desired, order kit 87329-004)	3246001 thru 3246017	1
6	100586-010	. LOCK ASSY - Baggage door (Part of 100586-029 Kit)	3246018 and up 3257001 and up	1
7	189-139	MOULDING - Baggage door (bulb type)		8
8	65440-007	. STRAP ASSY - Baggage door, white	3246001 thru 3246017	1
8	83365-002	. STRAP ASSY - Baggage door	3246018 and up 3257001 and up	
9	63900-031	BUSHING - Strap		1
10	690-727	STUD - (AN227-22)		1
11	603-347	RIVNUT - (MS27130A13K)		2
12	415-537	SCREW - (MS35206-247)		1
12A	690-612	WASHER - (NAS1149F0363P)		1
13	69495-000	COVER - Baggage door, lock		1
14	411-530	SCREW - (MS35207-261)		6
15	63744-008	PIN - Hinge, door		1

-Item not illustrated

When ordering, always specify Part Number, Description, and Serial Number of Aircraft

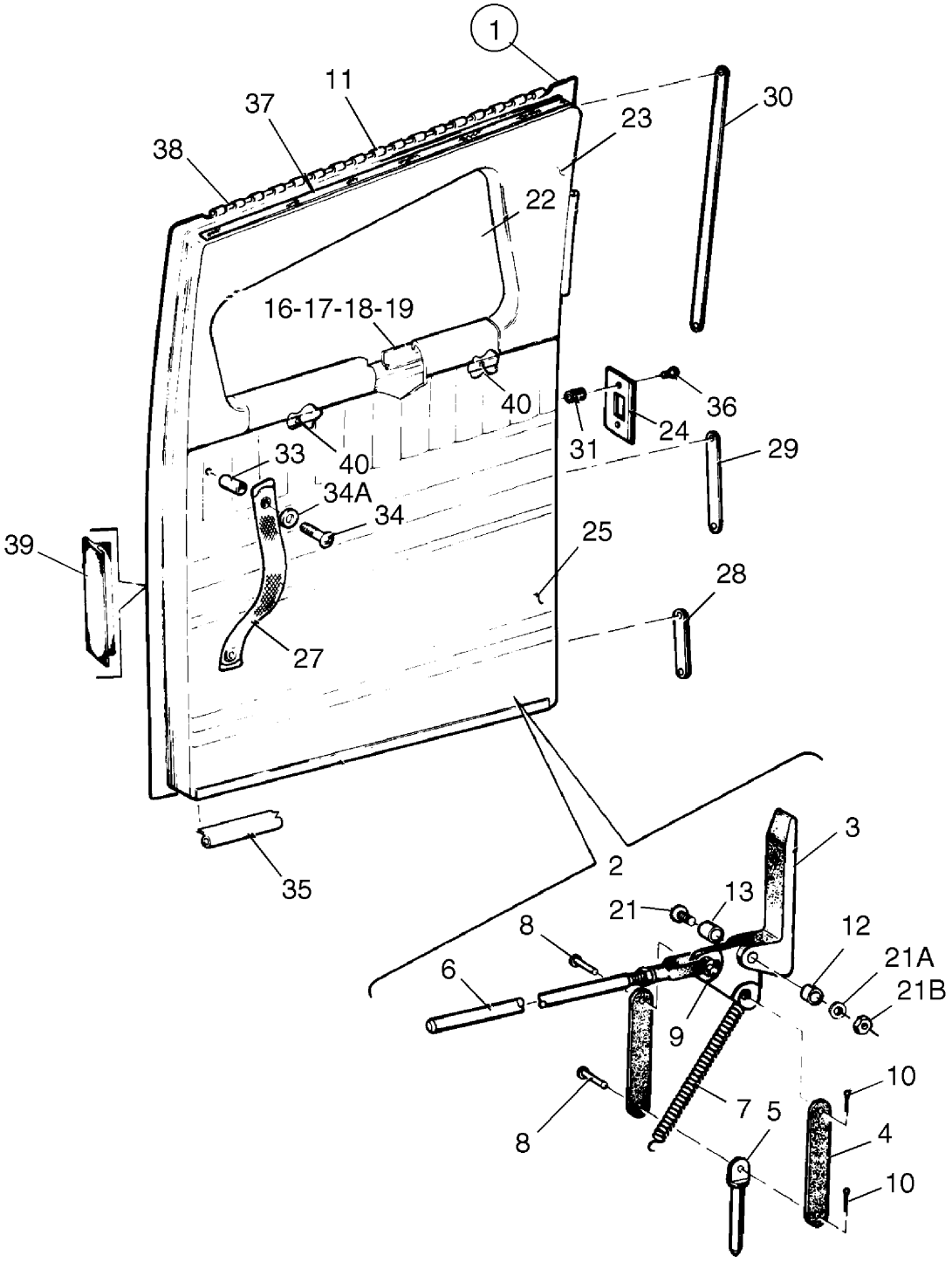

Figure 17. Fuselage Aft Cargo Door

FIGURE ITEM	PART NUMBER	NOMENCLATURE	EFFECT FROM TO	UNITS PER ASSY
17	79546 (AZ)	DRAWING - Doors Installation		
	36722 (K)	DRAWING - Door Snubber Installation		
	69858 (U)	DRAWING - Cargo Door Assy		
1	69858-004	DOOR ASSY - Cargo		1
-1A	69859-004	. MOULDING		1
-1B	69859-005	. MOULDING		1
2	68976-000	. LATCH ASSY - Cargo door		1
3	69112-000	. . HANDLE - Cargo door latch		1
4	68980-000	. . LINK - Cargo door latch		2
5	68978-000	. . PIN - Cargo door latch		1
6	68981-000	. . PIN ASSY - Cargo door latch		1
7	68963-000	. . SPRING - Cargo door		1
8	424-172	. . PIN - (MS20392-2C9)		2
9	424-192	. . PIN - (MS20392-2C15)		1
10	424-095	. . COTTER PIN - (MS24665-151)		2
11	68964-000	. HINGE HALF - Cargo door		1
12	63900-081	. BUSHING - Cargo door		1
13	63900-082	. BUSHING - Cargo door		1
-13A	63900-090	. BUSHING - Cargo door		1
-14	39740-014	. ANGLE - Top, cargo door		1
-15	39740-013	. ANGLE - Rear, cargo door		1
16	85194-004	. RETAINER - Front, cargo door window		1
17	85194-002	. RETAINER - Bottom, cargo door window		1
18	85194-003	. RETAINER - Top, cargo door window		1
19	85194-005	. RETAINER - Rear, cargo door window		1
-20	39721-000	. ANGLE - Front, cargo door		1
21	411-540	. SCREW - (MS35207-271)		1
21A	690-612	. WASHER - (NAS1149F0363P)		1
21B	404-526	. NUT - (MS21042-3)		1
22	85294-002	WINDOW - Cargo door, tinted (.125 thick)		1
-22A	419-641	. SCREW - (4x1/2 Lg, Type A)		11
-22B	419-642	. SCREW - (4x3/8 Lg, Type A)		3
-22C	380-002	. TAPE		AR
23	85210-099	PANEL ASSY - Cargo door, upper	3246001 thru 3246087	1
-23A	85210-299	PANEL ASSY - Cargo door, lower	3246088 and up 3257001 and up	1
-23B	419-956	. SCREW - (6x3/8 Lg, Type A)		4
-23C	690-727	. STUD - (AN227-22)		1
-23D	603-347	. RIVNUT - (MS27130A13K)		1
24	63293-002	PLATE - Door latch striker		1
-24A	410-248	. SCREW - (MS24694-S13)		2
25	85210-087	PANEL ASSY - Cargo door, lower		1
-25A	419-625	. SCREW		4
-26	68547-004	RETAINER - Cargo door, lower		1
27	83365-002	STRAP ASSY - Cargo door		1
28	63142-028	TRIM STRIP - Cargo door, lower		1
29	63142-029	TRIM STRIP - Cargo door, middle		1
30	63142-030	TRIM STRIP - Cargo door, upper		1
31	63257-000	BUSHING - Striker plate		2
-32	68999-008	WINDLACING - Cargo door		1
33	37511-026	BUSHING		1
34	415-539	SCREW - (MS35206-249)		1
34A	690-612	WASHER - (NAS1149FN363P)		1

-Item not illustrated

When ordering, always specify Part Number, Description, and Serial Number of Aircraft

FIGURE ITEM	PART NUMBER	NOMENCLATURE	EFFECT FROM TO	UNITS PER ASSY
17-				
-34B	655-100	COVER - Screw		1
-34C	452-104	BASE - Screw cover		1
35	189-139	MOULDING - Cargo door (bulb type)		2'
36	415-454	SCREW - (AN526-832R16)		2
37	65692-004	SEAL - Door		1
38	63744-010	PIN - Hinge, cargo door		1
39	36722-011	SEAL - Door snubber (29” long)		1
40	581-928	RIVET - Plastic		2

-Item not illustrated

When ordering, always specify Part Number, Description, and Serial Number of Aircraft

THIS PAGE INTENTIONALLY LEFT BLANK

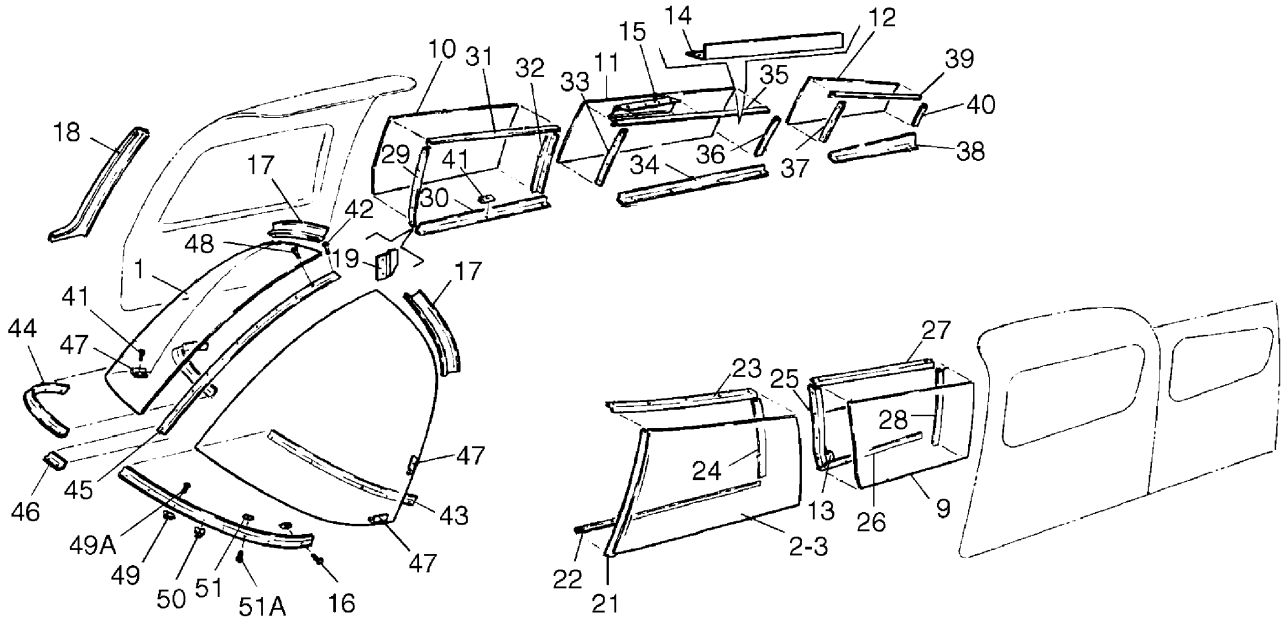

Figure 18. Fuselage Enclosure Installation

FIGURE ITEM	PART NUMBER	NOMENCLATURE	EFFECT FROM TO	UNITS PER ASSY
18	78271 (W)	DRAWING - Windshield Installation	3246001 thru 3246017	
	85535 (L)	DRAWING - Windshield Installation	3246018 and up	
	85210 (BF)	DRAWING - Interior Details		
	85206 (E)	DRAWING - Window Installation		
1	78271-005	WINDSHIELD - Left, tinted (.250 thick)	3246001 thru 3246017	1
-1A	85535-012	WINDSHIELD - Left, tinted (.250 thick)	3246018 and up 3257001 and up	1
-1B	78271-006	WINDSHIELD - Right, tinted (.250 thick)	3246001 thru 3246017	1
-1C	85535-013	WINDSHIELD - Right, tinted (.250 thick)	3246018 and up 3257001 and up	1
2	69713-005	WINDOW ASSY - Front, left, tinted		1
3	69712-005	. WINDOW - Front, left, tinted		1
-4	63744-009	. PIN - Storm window hinge		1
-5	65896-002	. WINDOW ASSEMBLY - Storm, tinted		1
-6	65742-000	. LATCH - Storm window		1
-7	65782-000	. HINGE HALF - Storm window		1
-8	79572-000	. SCREW - Special, storm window latch		1
-8A	408-832	. WASHER - Shakeproof		1
-8B	477-696	. NUT - Dome		1
9	85294-006	WINDOW - Middle, left, tinted (.125 thick)		1
10	85294-007	WINDOW - Middle, right, tinted (.125 thick)		1
11	85294-005	WINDOW - Middle, right, tinted (.125 thick)		1
12	85294-003	WINDOW - Rear, right, tinted (.125 thick)		1
13	39740-004	RETAINER - Left front, middle window		1
14	39728-003	FRAME - Window, right		1
-14A	404-138	. ANCHOR NUT - (MS21061L08)	3246018 and up 3257001 and up	2
-14B	477-809	. ANCHOR NUT - (MS21059L08)	3246018 and up 3257001 and up	12
-14C	415-536	. SCREW - (MS35206-206)	3246018 and up 3257001 and up	14
15	39743-003	ANGLE - Right top, middle window		1
16	415-520	SCREW - (MS35206-230)		2
17	63149-022	COVER - Windshield trim, left		1
-17A	63149-023	COVER - Windshield trim, right		1
18	39759-047	COVER ASSY - Window trim, front, right		1
19	39740-005	RETAINER - Right front, middle window		1
-20	69669-141	PLACARD - Storm window		1
21	79562-000	ANGLE - Left, front, front window		1
22	69709-000	RETAINER - Left, bottom, front window		1
23	68293-002	ANGLE - Left, top, front window		1
24	85194-008	RETAINER - Left, rear, front window		1
25	85194-009	RETAINER - Left, front, middle window		1
26	85194-015	RETAINER - Left, bottom, middle window		1
27	85194-016	RETAINER - Left, top, middle window		1
28	85194-010	RETAINER - Left, rear, middle window		1
29	85194-009	RETAINER - Right, front, middle window		1
30	85194-015	RETAINER - Right, bottom, middle window		1
31	85194-017	RETAINER - Right, top, middle window		1
32	85194-010	RETAINER - Right, rear, middle window		1
33	85194-012	RETAINER - Right, front, middle window		1
34	85194-014	RETAINER - Right, bottom, middle window		1
35	85194-019	RETAINER - Right, top, middle window		1

-Item not illustrated

When ordering, always specify Part Number, Description, and Serial Number of Aircraft

FIGURE ITEM	PART NUMBER	NOMENCLATURE	EFFECT FROM TO	UNITS PER ASSY
18-				
-35A	85194-020	SHIM - Right, top, middle window		1
36	85194-007	RETAINER - Right, rear, middle window		1
37	85194-011	RETAINER - Right, front, aft window		1
-37A	380-002	. TAPE - (PMS-K0003 Type I)		AR
38	85194-013	RETAINER - Right, bottom, aft window		1
39	85194-018	RETAINER - Right, top, aft window		1
-39A	68293-002	RETAINER - Left, top, aft, window		1
40	85194-006	RETAINER - Right, rear, aft window		1
41	419-681	SCREW		4
-41A	494-001	WASHER	3246001 thru 3246017	4
42	415-535	SCREW - (MS35206-245)	3246001 thru 3246017	1
43	69220-018	COLLAR - Inside, left		1
-43A	69220-019	COLLAR - Inside, right		1
44	69220-004	COLLAR - Outside, left	3246001 thru 3246017	1
-44A	100579-002	COLLAR - Outside, left	3246018 and up	1
-44B	69220-005	COLLAR - Outside, right	3246001 thru 3246017	1
-44C	100579-003	COLLAR - Outside, right	3246018 and up	1
45	79557-000	TRIM STRIP - Windshield, center	3246001 thru 3246017	1
-45A	79557-002	TRIM STRIP - Windshield, center	3246018 and up	1
-45B	79557-002	TRIM STRIP - Windshield, center	3257001 and up	1
-45C	415-544	. SCREW - (MS35206-244)	3246018 and up 3257001 and up	7
46	69219-000	PLATE - Windshield collar		1
47	79154-000	RETAINER - Windshield, left	3246001 thru 3246017	1
-47A	69891-004	RETAINER - Windshield, left	3246001 thru 3246017	1
-47C	85469-012	RETAINER - Windshield, left	3246018 and up 3257001 and up	1
-47D	79155-000	RETAINER - Windshield, right	3246018 and up 3257001 and up	2
-47E	69891-005	RETAINER - Windshield, right	3246001 thru 3246017	1
-47G	85469-013	RETAINER - Windshield, right	3246018 and up 3257001 and up	1
48	415-537	SCREW - (MS35206-247)	3246001 thru 3246017	8
49	406-809	ANCHOR NUT - (NAS687A06K)	3246001 thru 3246017	2
49	406-809	ANCHOR NUT - (NAS687A06K)	3246018 and up 3257001 and up	6
49A	486-286	SCREW - (NAS601-8P)	3246018 and up 3257001 and up	2
50	406-642	ANCHOR NUT - (NAS684A06K)	3246001 thru 3246017	1
-50A	486-286	SCREW - (NAS601-8P)	3246018 and up 3257001 and up	2
51	406-823	ANCHOR NUT - (NAS686A06K)	3246001 thru 3246017	17
51	406-823	ANCHOR NUT - (NAS686A06K)	3246018 and up	14
51A	486-286	SCREW - (NAS601-8P)	3246018 and up 3257001 and up	20
-51B	486-151	SCREW - (NAS6019P)		20
-52	69891-008	RETAINER - Windshield, left	3246001 thru 3246017	1
-52	69891-009	RETAINER - Windshield, right	3246001 thru 3246017	1
-53	69891-022	RETAINER - Windshield, left	3246018 and up 3257001 and up	1
-54	69891-023	RETAINER - Windshield, right	3246018 and up 3257001 and up	1

-Item not illustrated

When ordering, always specify Part Number, Description, and Serial Number of Aircraft

FIGURE ITEM	PART NUMBER	NOMENCLATURE	EFFECT FROM TO	UNITS PER ASSY
18-				
-55	79562-002	RETAINER - Left, top, aft cabin door		1
-56	69709-002	RETAINER - Left, bottom, aft cabin door		1
-57	419-641	. SCREW - (4x1/2 Lg, Type A)		1

-Item not illustrated

When ordering, always specify Part Number, Description, and Serial Number of Aircraft

THIS PAGE INTENTIONALLY LEFT BLANK

SECTION III
TAIL SURFACES GROUP

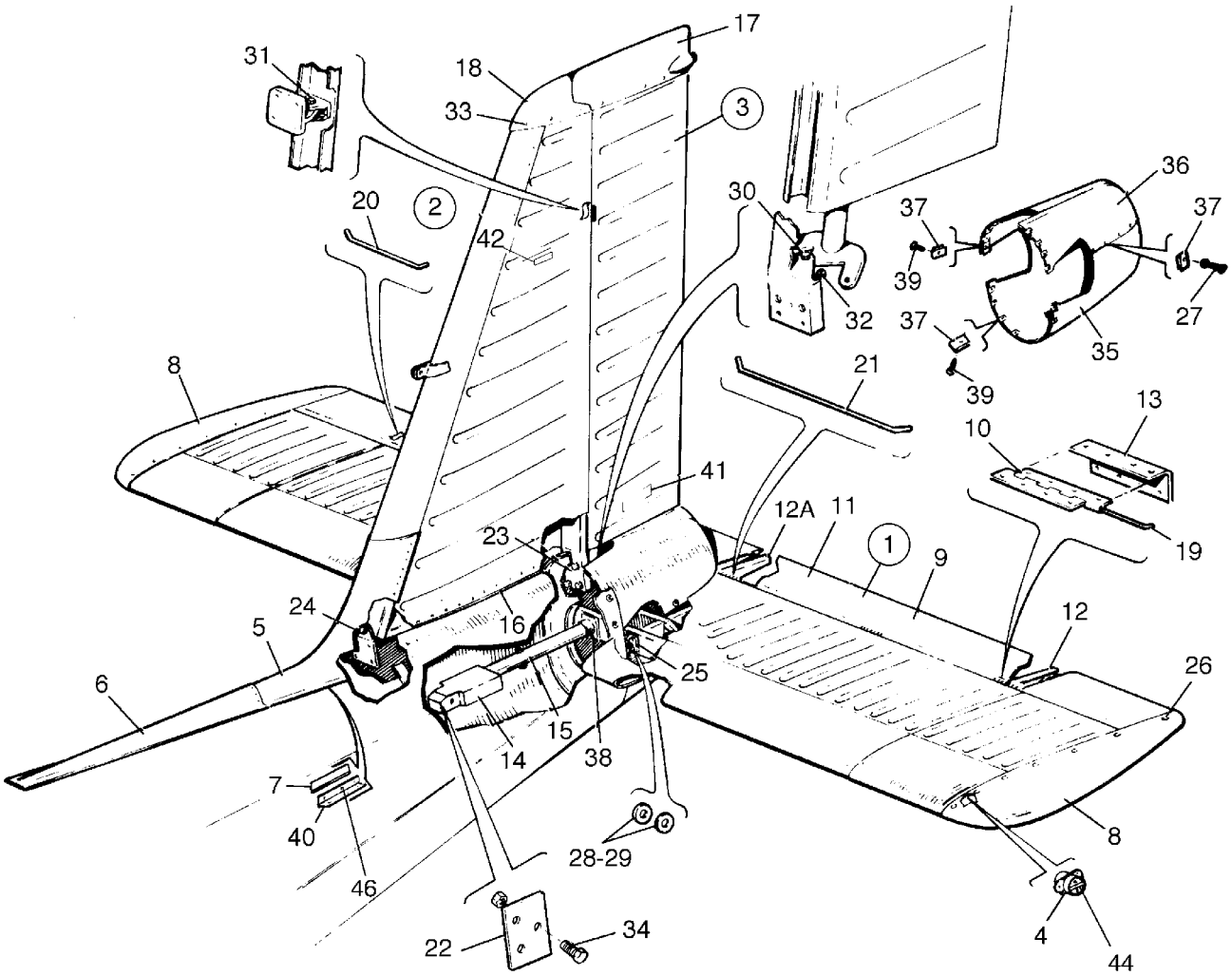

Figure 19. Tail Surfaces Installation

FIGURE ITEM	PART NUMBER	NOMENCLATURE	EFFECT FROM TO	UNITS PER ASSY
19	68425 (BM)	DRAWING - Tail Surfaces Installation		
	62002 (CT)	DRAWING - Tail Surfaces Installation (Fin and Rudder)		
	83363 (N)	DRAWING - Exterior Finish		
1	68426-002	STABILATOR ASSY		1
		(See Figure 20 for component parts)		
2	66975-006	FIN ASSY		1
		(See Figure 21 for component parts)		
3	65342-002	RUDDER ASSY		1
		(See Figure 22 for component parts)		
4	38192-000	WEIGHT ASSY - Stabilator tip		2
5	99619-004	FAIRING ASSY - Fin, aft	3246001 thru 3246064	1
5	99619-007	FAIRING ASSY - Fin, aft	3246065 and up 3257001 and up	1
6	99621-002	FAIRING - Fin, forward		1
7	63186-021	MOULDING - Extruded		2
8	63584-016	TIP ASSY - Stabilator		2
8	63584-000	TIP ASSY - Stabilator		2
9	63585-003	TAB ASSY - Stabilator trim, left		1
-9A	63585-004	TAB ASSY - Stabilator trim, right		1
10	63560-002	. HINGE - Half, stabilator tab		3
11	63586-000	. SKIN - Stabilator trim tab, left		1
-11A	63586-001	. SKIN - Stabilator trim tab, right		1
12	63587-002	. RIB - Outboard		1
12A	63587-003	. RIB - Inboard		1
13	63588-000	. DOUBLER		3
14	99803-005	BALANCE WEIGHT ASSY - Stabilator		1
15	69624-000	. TUBE ASSY - Stabilator		1
-15A	38713-000	. WEIGHT		1
16	63186-002	MOULDING - Extruded		2
17	36712-002	FAIRING ASSY - Rudder tip		
		(without provisions for tail light)		1
18	38222-003	FIN TIP ASSY	3246001 thru 3246153 3257001 thru 3257123	1
18	104138-002	FIN TIP ASSY	3246154 and up 3257124 and up	1
-18A	83222-004	. TIP - Fin	3246154 and up 3257124 and up	1
-18B	104176-002	. BRACKET ASSY - Fin light	3246154 and up 3257124 and up	1
-18C	685-503	. STROBE LIGHT - (01-0790111-02)	3246154 and up 3257124 and up	1
-18D	414-781	. SCREW LIGHT - (MS24693-C50)	3246154 and up 3257124 and up	4
-18E	598-395	. WASHER - Dimpled	3246154 and up 3257124 and up	4
19	62002-002	PIN - Hinge		2
20	62002-003	PIN - Hinge		2
21	62002-004	PIN - Hinge		1
22	96564-000	PLATE - Stabilator balance		AR
23	400-003	BOLT - (AN4-6A)		4
-23A	690-611	WASHER - (NAS1149F0463P)		8

-Item not illustrated

When ordering, always specify Part Number, Description, and Serial Number of Aircraft

FIGURE ITEM	PART NUMBER	NOMENCLATURE	EFFECT FROM TO	UNITS PER ASSY
19-				
-23B	404-530	NUT - (MS21042-4)		4
24	400-003	BOLT - (AN4-6A)		1
-24A	690-611	WASHER - (NAS1149F0463P)		2
25	402-680	BOLT - (NAS1104-17)		2
-25A	690-611	WASHER - (NAS1149F0463P)		4
		(Use (1) under head, (1) under nut)		
-25B	406-637	NUT - (H10-4)		2
26	410-054	SCREW - (MS24694-C5)		24
-26A	598-395	WASHER - (A3135SS-017-24A)		24
-26B	477-672	NUT		24
27	414-783	SCREW - (MS24693-C51)		10
-27A	598-395	WASHER - (A3135SS-017-24A)		10
28	690-613	WASHER - (NAS1149F0432P)		AR
29	690-611	WASHER - (NAS1149F0463P)		AR
30	401-269	BOLT - (AN3-10A)		1
-30A	690-612	WASHER - (NAS1149FN363P)		3
-30B	404-526	NUT - (MS21042-3)		1
-30C	690-609	WASHER - (NAS1149F0332P)		1
31	400-056	BOLT - (AN3-11)		1
-31A	690-612	WASHER - (NAS1149FN363P)		7
-31B	690-609	WASHER - (NAS1149F0332P)		2
-31C	404-100	NUT - (AN310-3)		1
-31D	424-051	COTTER PIN - (MS24665-132)		1
32	553-266	BOLT - (NKN 428-3-7)		2
-32A	404-224	NUT - (AN315-3R)		2
33	410-054	SCREW - (MS24694-C5)		16
-33A	598-395	WASHER		16
-33B	477-672	NUTPLATE		6
34	401-330	BOLT - (AN4-32A)		1
-34A	690-611	WASHER - (NAS1149F0463P)		2
-34B	404-530	NUT - (MS21042-4)		1
35	66822-009	FAIRING - Lower		1
36	66822-010	FAIRING - Upper		1
37	477-640	NUT		26
		(Refer to Piper Service Bulletin 1141 - latest revision		
		(for Serial Numbers 3246213-214 and 3257316-326)		
38	400-450	BOLT - (AN3-17A)		2
-38A	690-612	WASHER - (NAS1149FN363P)		6
-38B	404-526	NUT - (MS21042-3)		2
39	415-378	SCREW - (MS51957-45)		16
40	79277-000	ANGLE - Dorsal fin fitting, left	3246001 thru 3246069	1
40	101328-002	ANGLE - Dorsal fin fitting, left	3246070 and up 3257001 and up	1
-40A	79277-001	ANGLE - Dorsal fin fitting, right	3246001 thru 3246069	1
-40A	101328-003	ANGLE - Dorsal fin fitting, right	3246070 and up 3257001 and up	1
41	87341-002	PLACARD - Do not push		RF
42	100814-002	STENCIL		2
44	401-264	BOLT - (AN3H-4A)		2
-44A	690-612	WASHER - (NAS1149FN363P)		2
46	415-533	SCREW - (MS35206-243)	3246070 and up 3257001 and up	8
-47	469-600	JUMPER ASSY - (MS25083-3AA6)		1

-Item not illustrated

When ordering, always specify Part Number, Description, and Serial Number of Aircraft

THIS PAGE INTENTIONALLY LEFT BLANK

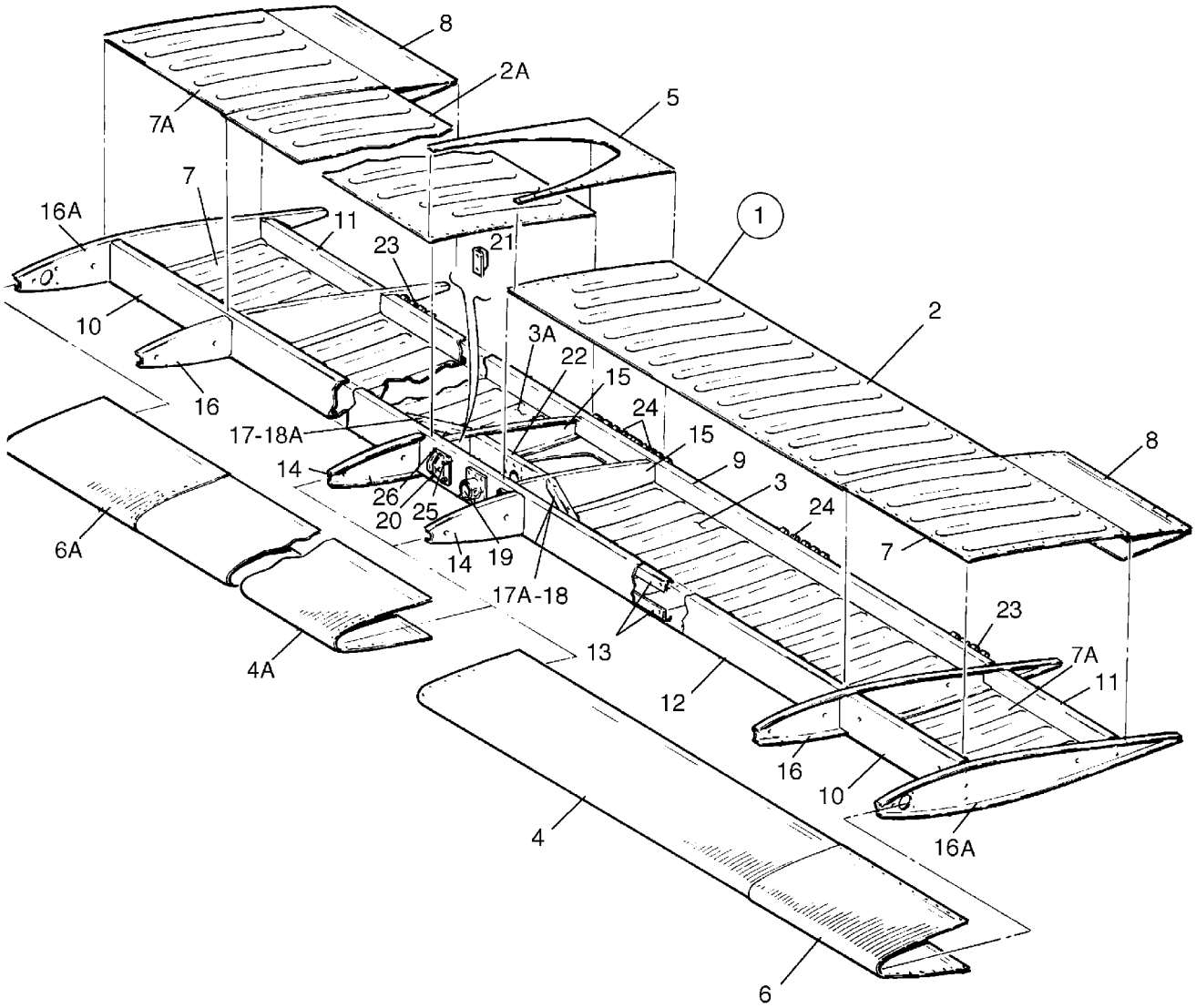

Figure 20. Stabilator Assembly

FIGURE ITEM	PART NUMBER	NOMENCLATURE	EFFECT FROM TO	UNITS PER ASSY
20	68425 (BM)	DRAWING - Tail Surfaces Installation		
1	68426-002	STABILATOR ASSY		RF
2	63392-000	. SKIN - Stabilator, aft top, left		1
2A	63392-001	. SKIN - Stabilator, aft top, right		1
3	63393-000	. SKIN - Stabilator, aft bottom, left		1
3A	63393-001	. SKIN - Stabilator, aft bottom, right		1
4	63573-000	. SKIN - Stabilator, leading edge, left		1
4A	63573-001	. SKIN - Stabilator, leading edge, right		1
5	63575-000	. SKIN - Stabilator, center, top		1
-5A	63575-002	. SKIN - Stabilator, center, bottom		1
6	68429-002	. SKIN - Stabilator, leading edge, left		1
6A	68429-003	. SKIN - Stabilator, leading edge, right		1
7	68430-000	. SKIN - Stabilator, top, left, bottom right		2
7A	68430-001	. SKIN - Stabilator, top, right, bottom left		2
8	68431-000	. SKIN - Stabilator, top, left, bottom, right		2
-8A	68431-001	. SKIN - Stabilator, top, right, bottom, left		2
9	63572-000	. SPAR - Stabilator, rear		1
10	68427-000	. SPAR - Stabilator, outboard, forward		2
11	68428-000	. SPAR - Stabilator, outboard, aft		2
12	63561-005	. SPAR - Stabilator, main		1
13	63562-000	. CAP - Stabilator, spar		2
14	63569-000	. RIB - Stabilator, nose		2
15	63570-000	. RIB - Stabilator, aft		2
16	63571-000	. RIB - Stabilator, inboard		2
16A	96562-002	. RIB - Stabilator, outboard		2
17	63566-002	. STIFFENER - Stabilator, top, right		1
17A	63566-003	. STIFFENER - Stabilator, top, left		1
18	63566-002	. STIFFENER - Stabilator, bottom, left		1
18A	63566-003	. STIFFENER - Stabilator, bottom, right		1
19	63567-000	. FITTING - Balance weight attachment		2
20	63563-000	. FITTING - Stabilator hinge		2
21	63564-000	. ANGLE - Stabilator		2
22	63560-005	. CLOSURE ASSY		1
23	63560-002	. HINGE - Extruded, outboard		2
24	63560-003	. HINGE - Extruded, inboard and center		4
25	400-003	. BOLT - Inboard (AN4-6A)		4
-25A	690-611	. WASHER - (NAS1149F0463P)		8
-25B	404-530	. NUT - (MS21042-4)		4
26	400-004	. BOLT - Outboard (AN4-7A)		4
-26A	690-611	. WASHER - (NAS1149F0463P)		8
-26B	404-530	. NUT - (MS21042-4)		4
-27	63568-000	. FILLER - Stabilator		2
-28	581-760	. PLATE		1

-Item not illustrated

When ordering, always specify Part Number, Description, and Serial Number of Aircraft

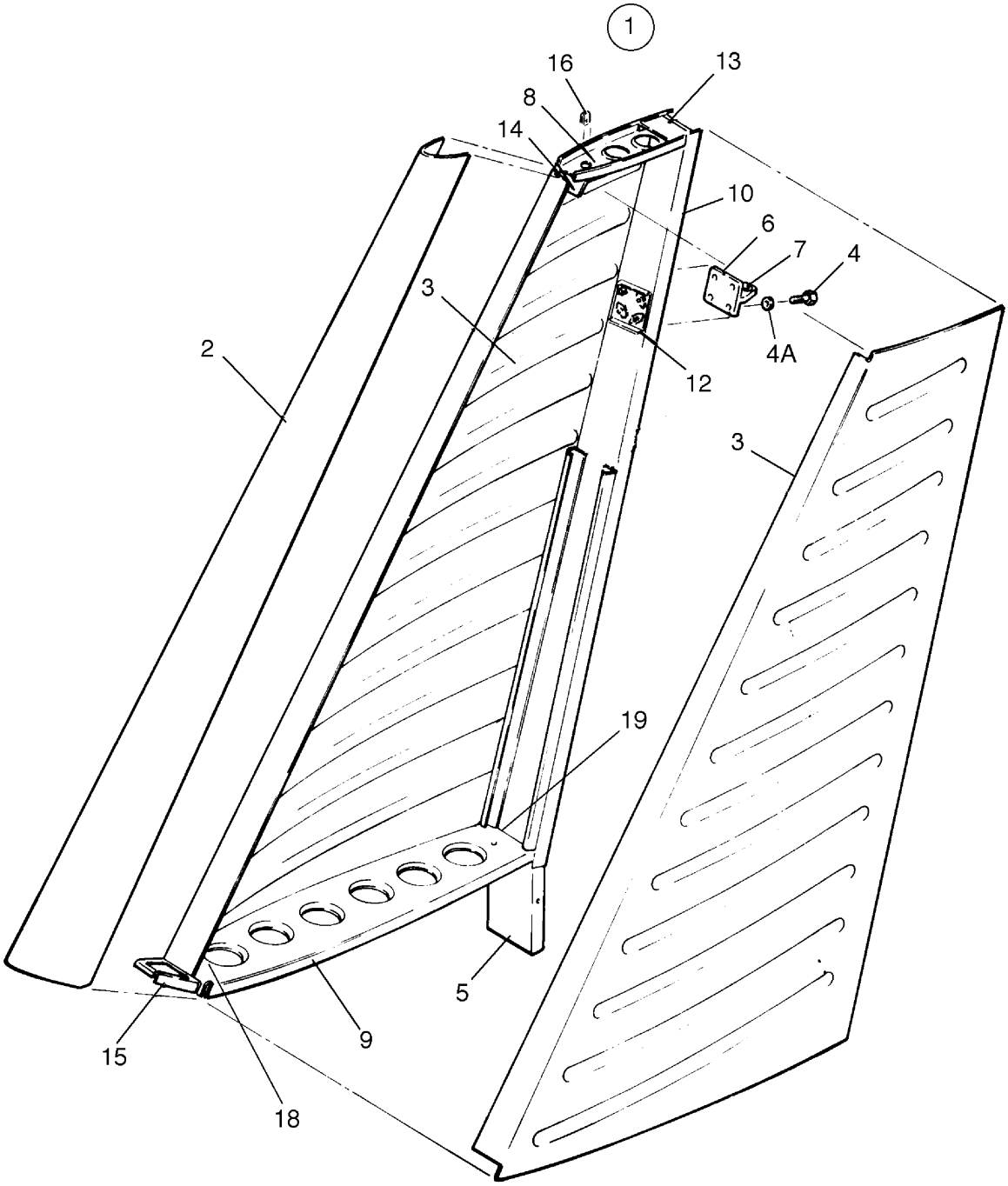

Figure 21. Fin Assembly

FIGURE ITEM	PART NUMBER	NOMENCLATURE	EFFECT FROM TO	UNITS PER ASSY
21	68425 (BM)	DRAWING - Tail Surfaces Installation		
1	66975-006	FIN ASSY		RF
2	63513-000	. SKIN ASSY - Fin, nose		1
3	63500-007	. SKIN ASSY - Fin		1
4	401-266	. BOLT - (AN3-5A)		4
4A	690-609	. WASHER - (NAS1149F0332P)		4
5	63501-003	. FITTING - Fin, root		1
6	63502-000	. HINGE ASSY - Fin		1
7	452-387	. BEARING		1
8	66972-000	. RIB ASSY - Fin, top		1
9	63506-000	. RIB ASSY - Fin, bottom		1
10	63500-002	. SPAR - Fin, rear		1
12	63509-000	. DOUBLER ASSY - Fin		1
13	63515-000	. BRACKET - Fin antenna		1
14	63510-000	. CLIP - Fin		1
15	79268-000	. RIB - Fin, nose		1
-15A	406-842	. ANCHOR NUT - (NAS686A4K)		1
16	477-672	. NUT - (MU-832-.38-.025/.050-L-F10		8
-17	581-760	. PLATE - Serial		1
18	477-826	. GANG CHANNEL		2
19	66975-007	. GUSSET		2

-Item not illustrated

When ordering, always specify Part Number, Description, and Serial Number of Aircraft

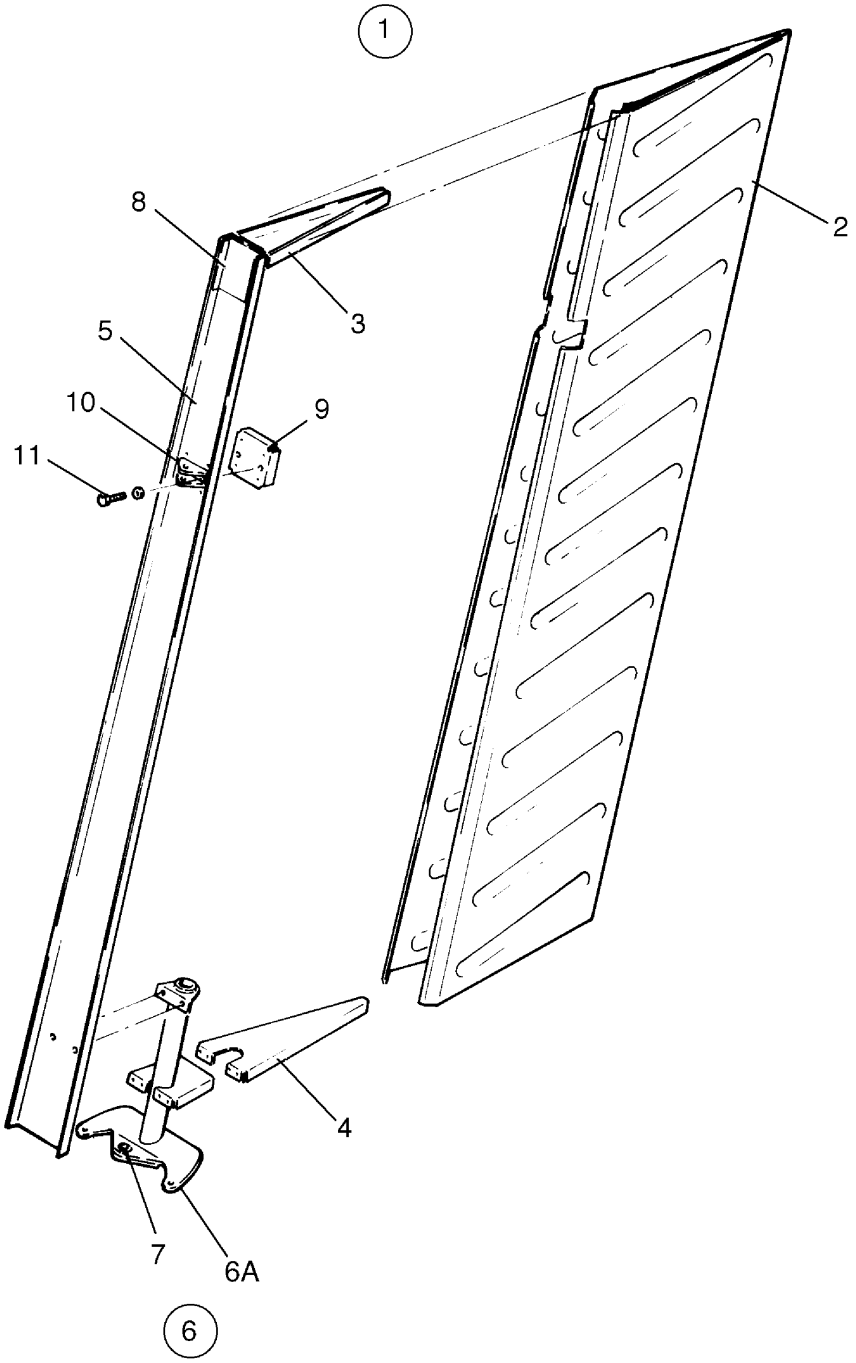

Figure 22. Rudder Assembly

FIGURE ITEM	PART NUMBER	NOMENCLATURE	EFFECT FROM TO	UNITS PER ASSY
22	68425 (BM)	DRAWING - Tail Surfaces Installation		
1	65342-002	RUDDER ASSY		RF
2	63396-002	. SKIN - Rudder		1
3	63545-000	. RIB - Rudder, top		1
4	63544-000	. RIB - Rudder, bottom		1
5	63543-000	. SPAR - Rudder		1
6	63546-000	. WELD ASSY - Rudder		1
6A	63547-000	. . HORN ASSY		1
7	452-387	. . BEARING		1
8	65341-000	. DOUBLER - Rudder top		1
9	63395-000	. DOUBLER ASSY - Rudder		1
10	63550-000	. FITTING - Rudder hinge		1
11	400-438	. BOLT - (AN3-4A)		2
-11A	690-609	. WASHER - (NAS1149F0332P)		2
-12	581-760	. PLATE - Serial		1
-13	68817-056	. PLATE - Support rudder weld assy		1

-Item not illustrated

When ordering, always specify Part Number, Description, and Serial Number of Aircraft

GRIDS 1D22 THRU 1D24
INTENTIONALLY BLANK

SECTION IV
LANDING GEAR GROUP

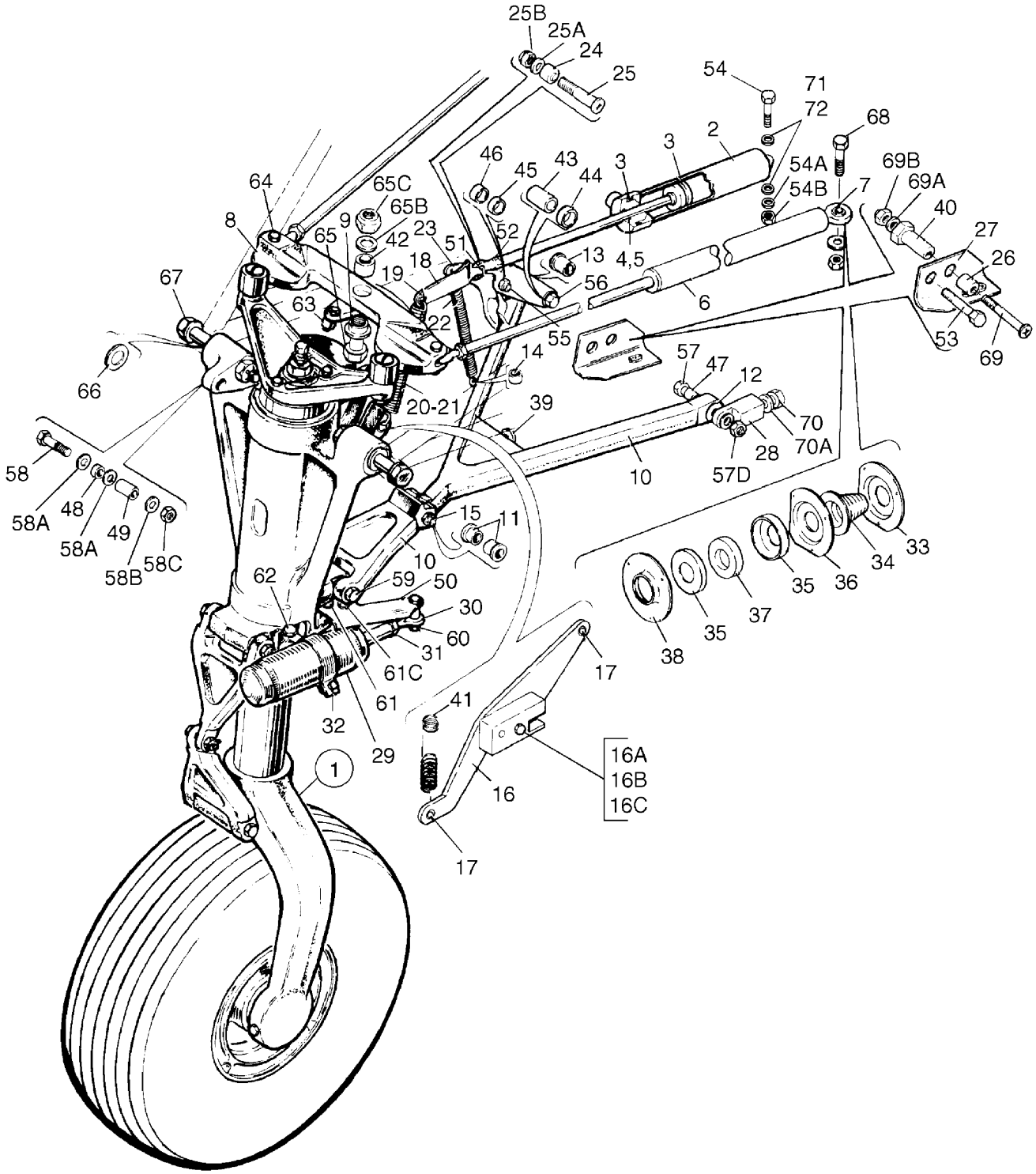

Figure 23. Nose Gear Installation

FIGURE ITEM	PART NUMBER	NOMENCLATURE	EFFECT FROM TO	UNITS PER ASSY
23	38040 (DD)	DRAWING - Nose Gear Installation		
1	67100-014	GEAR ASSY - Nose (Less tire, tube and wheel assy) (See Figure 24 for component parts)	3246001 thru 3246017	1
1	67100-015	GEAR ASSY - Nose (Less tire, tube and wheel assy) (See Figure 24 for component parts)	3246018 and up 3257001 and up	1
2	35797-005	CYLINDER ASSY - Hydraulic, nose gear (Parker Hannifin)		1
-2A	455-987	. CYLINDER		1
3	752-648	. . O-RING		2
4	752-585	. . O-RING - (MS28775-110)		1
5	762-687	. . BACK-UP RING		1
6	38151-000	ROD ASSY - Nose wheel steering		2
7	452-334	. BEARING - Steering rod		2
8	67155-000	CAM ASSY - Nose gear steering		1
9	452-445	. BEARING - Steering cam (FF-600-5)		1
10	38040-002	LINK AND BRACE ASSY - Gear downlock		1
11	87319-002	. BEARING - Upper drag brace		2
12	87319-003	. BEARING - Upper drag brace		1
13	87319-004	. BEARING - Upper drag brace		1
14	61402-093	. BUSHING - Upper drag brace		1
15	402-938	. BOLT - (NAS464P4-31)		1
-15A	690-611	. WASHER - (NAS1149F0463P)		2
-15B	404-393	. NUT - (AN320-4)		1
-15C	424-051	. COTTER PIN - (MS24665-132)		1
16	38232-004	ARM ASSY - Nose year spring, forward		1
16A	401-273	. BOLT - (AN3-14A)		1
16B	690-612	. WASHER - (NAS1149FN363P)		1
16C	404-526	. NUT - (MS21042-3)		1
17	82732-099	. BUSHING - Nose gear arm		2
18	38234-000	ARM ASSY - Nose gear spring, aft		1
19	82732-099	. BUSHING - Nose gear arm		1
20	67168-000	SPRING - Nose gear arm, inner		1
21	67169-000	SPRING - Nose gear arm, outer		1
22	67189-000	SPRING - Nose gear downlock		1
23	38078-000	DOWNLOCK - Nose gear		1
24	65003-030	. BUSHING - Downlock		1
25	400-871	. BOLT - (AN23-19A)		1
25A	690-612	. WASHER - (NAS1149FN363P)		1
25B	404-526	. NUT - (MS21042-3)		1
26	38068-002	BEARING - Downlock		1
27	38174-004	CLIP ASSY - Support, nose gear door		1
28	38041-002	FITTING - Upper drag brace		1
29	456-016	DAMPENER ASSY - Nose wheel shimmy		1
30	453-188	. BOLT - Eye, shimmy dampener (11601-003)		1
31	404-322	. NUT - Shimmy dampener (AN316-4R)		1
32	67244-000	CLAMP - Dampener Assy		1
33	35284-003	HOUSING - Bungee seal		2
34	35270-000	BOOT - Nose wheel bungee		2
35	35283-000	HOUSING - Bungee seal		4
36	35284-002	HOUSING - Bungee seal		2
37	35282-004	RING - Bungee seal		2
38	38065-000	PLATE - Bungee seal		2

-Item not illustrated

When ordering, always specify Part Number, Description, and Serial Number of Aircraft

FIGURE ITEM	PART NUMBER	NOMENCLATURE	EFFECT FROM TO	UNITS PER ASSY
23-				
-38A	518-014	SCREW - (NAS601-6)		3
-38B	404-528	NUT - (MS21042-06)		3
39	37970-002	STOP - 5/16 - 18 thread		1
-39A	407-045	WASHER - (MS35338-45)		1
-39B	405-451	NUT - (MS35649-2312)		1
40	35662-002	BUSHING - Eccentric		1
41	67168-000	SPRING - Nose gear arm		1
42	65003-015	BUSHING		1
43	95061-133	BUSHING		1
44	02570-002	FITTING - Drag link		1
45	95061-135	BUSHING		1
46	95061-136	BUSHING		1
47	65003-045	BUSHING		1
48	82732-095	BUSHING - Spacer		1
49	95061-168	BUSHING		1
50	67114-000	BRACKET ASSY - Shimmy dampener		1
51	452-729	BEARING		1
52	67192-000	NUT - Cylinder rod end		1
53	400-443	BOLT - (AN3-12A)		2
-53A	690-612	WASHER - (NAS1149FN363P)		2
-53B	404-526	NUT - (MS21042-3)		2
54	402-869	BOLT - (NAS464-P3-A13)		1
54A	690-612	WASHER - (NAS1149FN363P)		1
54B	404-526	NUT - (MS21042-3)		1
55	402-315	BOLT - (AN174-15)		1
-55A	690-664	WASHER - (NAS1149C0463R)		1
-55B	404-101	NUT - (AN310-4)		1
-55C	424-095	COTTER PIN - (MS24665-151)		1
56	400-229	BOLT - (AN6-36)		1
-56A	62833-043	WASHER - (I.D. 375)		1
-56B	62833-107	WASHER - (I.D. 500) Teflon		1
-56C	690-629	WASHER - (NAS1149F0663P)		1
-56D	404-123	NUT - (AN310-C6)		1
-56E	424-061	COTTER PIN - (MS24665-287)		1
57	400-219	BOLT - (AN6-26)		1
-57A	62833-043	WASHER - (I.D. 374)		1
-57B	62833-087	WASHER - (I.D. 437) Teflon		1
-57C	690-629	WASHER - (NAS1149F0663P)		1
57D	404-123	NUT - (AN310-C6)		1
-57E	424-061	COTTER PIN - (MS24665-287)		1
58	401-315	BOLT - (AN4-15A)		1
58A	62833-064	WASHER		2
58B	690-613	WASHER - (NAS1149F0432P)		1
58C	404-530	NUT - (MS21042-4)		1
59	400-192	BOLT - (AN5-52)		1
-59A	690-619	WASHER - (NAS1149F0532P)		2
-59B	690-628	WASHER - (NAS1149F0563P)		1
-59C	404-102	NUT - (AN310-5)		1
-59D	424-052	COTTER PIN - (MS24665-134)		1
60	400-108	BOLT - (AN4-13)		1
-60A	690-611	WASHER - (NAS1149F0463P)		2
-60B	690-613	WASHER - (NAS1149F0432P)		2
-60C	404-101	NUT - (AN310-4)		1
-60D	424-051	COTTER PIN - (MS24665-132)		1
61	400-440	BOLT - (AN3-6A)		1

-Item not illustrated

When ordering, always specify Part Number, Description, and Serial Number of Aircraft

FIGURE ITEM	PART NUMBER	NOMENCLATURE	EFFECT FROM TO	UNITS PER ASSY
23-				
-61A	690-612	WASHER - (NAS1149FN363P)		1
-61B	404-526	NUT - (MS21042-3)		1
61C	400-864	BOLT - (AN23-12A)		1
-61D	690-612	WASHER - (NAS1149FN363P)		1
-61E	404-526	NUT - (MS21042-3)		1
62	400-112	BOLT - (AN4-17)		1
-62A	690-613	WASHER - (NAS1149F0432P)		4
-62B	404-101	NUT - (AN310-4)		1
-62C	424-051	COTTER PIN - (MS24665-132)		1
63	411-349	SCREW - (NM135FS428R14CR)		1
-63A	14976-015	BUSHING - (O.D. 625) outer		1
-63B	14976-016	BUSHING - (O.D. 375) inner		1
64	401-269	BOLT - (AN3-10A)		2
-64A	404-526	NUT - (MS21042-3)		2
65	400-761	BOLT - (AN26-25)		1
-65A	408-106	WASHER - (MS35335-35)(used on bolt head)		1
65B	62833-010	WASHER		3
65C	404-890	NUT - (MS20364-624C)		1
66	690-630	WASHER - (NAS1149F0763P)		AR
67	400-279	BOLT - (AN7-42)		2
-67A	690-652	WASHER - (NAS1149DN616H)		2
-67B	404-124	NUT - (AN310-C7)		2
-67C	424-061	COTTER PIN - (MS24665-287)		2
-67D	690-630	WASHER - (NAS1149F0763P)(under bolt head, max. 3)		AR
68	401-274	BOLT - (AN3-15A)		2
-68A	690-609	WASHER - (NAS1149F0332P)		2
-68B	404-526	NUT - (MS21042-3)		2
69	410-011	SCREW - (MS24694-S79)		1
69A	690-609	WASHER - (NAS1149F0332P)		1
69B	404-526	NUT - (MS21042-3)		1
70	401-302	BOLT - (AN4H-5A)		2
70A	690-613	WASHER - (NAS1149F0432P)		2
71	690-612	WASHER - (NAS1149FN363P)		AR
72	690-609	WASHER - (NAS1149F0332P)		AR
-73	401-406	BOLT - (AN6-26A)	3246001 thru 3246017	5
-73	401-405	BOLT - (AN6-25A)	3246018 and up 3257001 and up	5
-73A	690-629	WASHER - (NAS1149F0663P)		5
-73B	690-620	WASHER - (NAS1149F0632P)(Use with NAS1149F0663P such that at least 2, but not more than 4 threads show beyond nut)		AR
-73C	404-563	NUT - (MS21045-6)		5
-74	38252-002	BRACKET - Nose landing switch shield (See Figure 69)		RF

-Item not illustrated

When ordering, always specify Part Number, Description, and Serial Number of Aircraft

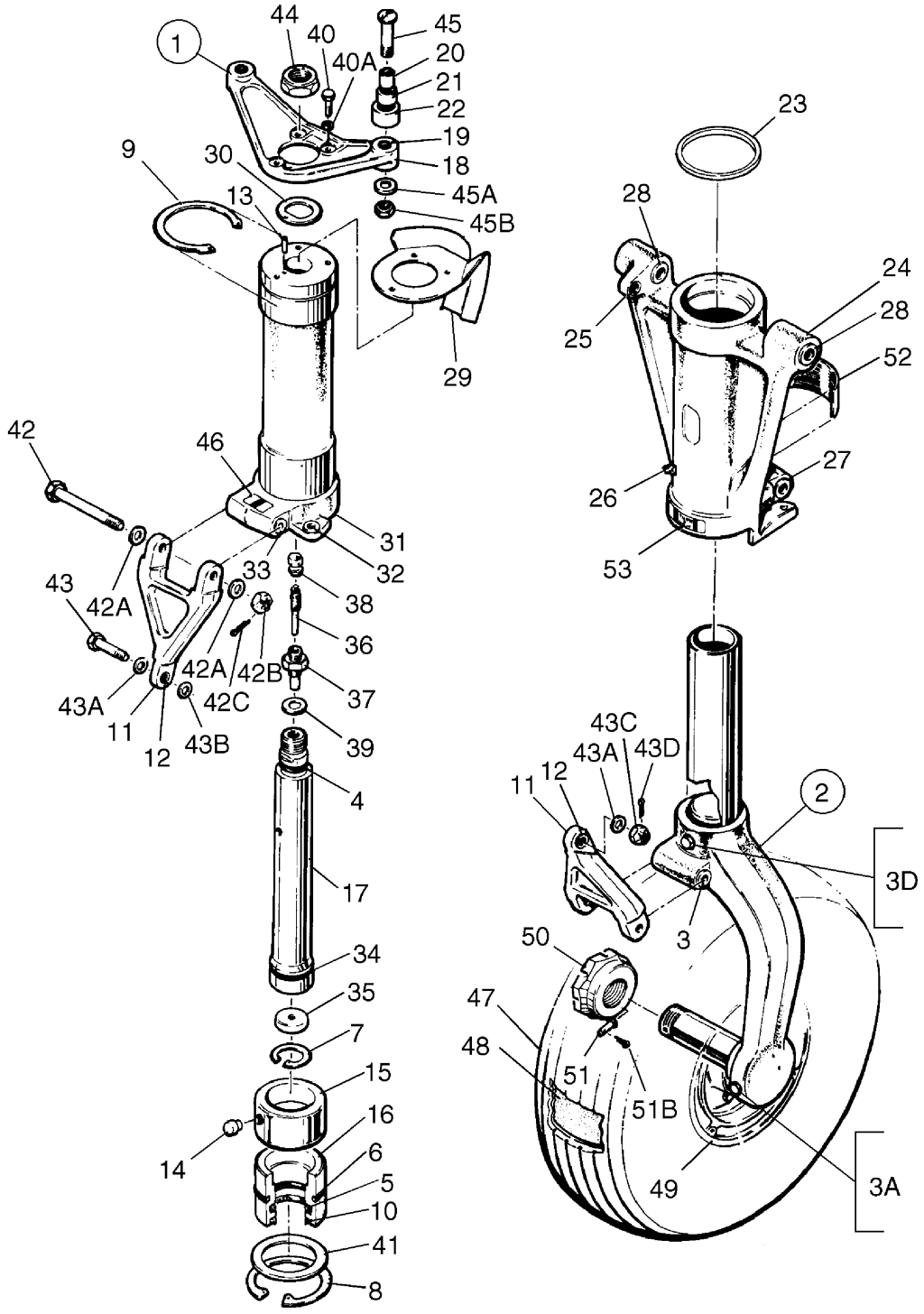

Figure 24. Nose Gear Assembly

FIGURE ITEM	PART NUMBER	NOMENCLATURE	EFFECT FROM TO	UNITS PER ASSY
24	67100 (CB)	DRAWING - Gear Assy - Nose		
1	67100-014	GEAR ASSY - Nose (Less tire, tube and wheel assy) (See Figure 69 for landing light installation)	3246001 thru 3246017	RF
1	67100-015	GEAR ASSY - Nose (Less tire, tube and wheel assy) (See Figure 69 for landing light installation)	3246018 and up 3257001 and up	RF
2	67050-002	. STRUT ASSY - Nose gear, lower		1
3	67026-007	. . BEARING		2
3A	400-019	. . BOLT - (AN4-26A)		1
-3B	690-613	. . WASHER - (NAS1149F0432)		1
-3C	406-637	. . NUT - (H10-4)		1
3D	691-312	. . BOLT - (NAS6604-40)		1
-3E	690-613	. . WASHER - (NAS1149F0432)		1
-3F	406-637	. . NUT - (H10-4)		1
4	484-790	. O-RING - (MS28775-210)		1
5	484-799	. O-RING - (MS28775-327)		1
6	462-034	. O-RING - (AN6230-5)		1
7	484-684	. RING - Snap (N500-118MD)		1
8	485-193	. RING - Snap (IRR3000X250STZD)		1
9	484-723	. RING - Snap (5100-268)		1
10	187-627	. STRIP - Wiper (S-35-29)		1
11	20735-005	. LINK ASSY - Nose gear torque		2
12	452-366	. . BEARING - (F310-5)		1
13	480-700	. PIN - Roll (59-022-094-0375)		2
14	680-755	. PIN - Bearing retaining (01821-006)		2
15	67909-000	. BEARING - Strut tube, upper		1
16	67755-000	. BEARING - Strut tube, lower		1
17	21712-002	. TUBE - Nose gear orifice		1
18	44386-003	. ARM ASSY - Nose wheel steering		1
19	14976-011	. . BUSHING - Arm assy		2
20	63900-109	. BUSHING - Nose gear, inner		2
21	452-477	. BEARING - Sleeve		2
22	63900-122	. BUSHING - Nose gear, outer		2
23	62833-045	. SPACER		AR
24	67054-008	. TRUNNION ASSY - Nose gear (See Figure 69 for landing light installation)		1
25	95061-144	. . BUSHING - Trunnion assy		1
26	460-691	. . FITTING - Grease (AN944-101)		1
27	67026-007	. . BEARING		2
28	67026-011	. . BEARING		4
29	67107-000	. BRACKET - Nose gear aligner guide		1
30	21710-000	. WASHER - Nose gear lock		1
31	67148-000	. TUBE ASSY - Nose gear strut, upper		1
32	21831-004	. . BEARING - Tube assy, nose gear strut		1
33	67026-007	. . BEARING		2
34	484-828	. RING - Compression (R19047)		1
35	67245-000	. PLATE - Orifice		1
36	455-124	. CORE - Air valve (AN809-1)		1
37	453-124	. BODY - Air valve (AN812-1)		1
38	553-891	. CAP - Air valve (MS20813-1)		1
39	462-024	. GASKET - Air valve (AN901-5A)		1
40	401-265	. BOLT - (AN3H-7A)		3
40A	690-611	. WASHER - (NAS1149F0363P)		3
41	8012-088	. WASHER - Nose gear		1

-Item not illustrated

When ordering, always specify Part Number, Description, and Serial Number of Aircraft

FIGURE ITEM	PART NUMBER	NOMENCLATURE	EFFECT FROM TO	UNITS PER ASSY
24-				
42	691-315	. BOLT - (NAS6605D46)		2
42A	690-628	. WASHER - (NAS1149F0563P)		4
42B	404-102	. NUT - (AN310-5)		2
42C	424-053	. COTTER PIN - (MS24665-136)		2
43	691-334	. BOLT - (NAS6604D15)		1
43A	690-611	. WASHER - (NAS1149F0463P)		2
43B	690-613	. WASHER - (NAS1149F0432P) (Between the two link assy)		1
43C	404-101	. NUT - (AN310-4)		1
43D	424-053	. COTTER PIN - (MS24665-136)		1
44	404-840	. NUT - (MS21245-L14)		1
45	400-744	. BOLT - (AN25-30A)		2
45A	690-628	. WASHER - (NAS1149F0563P)		AR
45B	404-531	. NUT - (MS21042-5)		2
46	35669-005	PLACARD - Nose Wheel Alignment (See Figure 81-24)		RF
47	551-606	. TIRE - (5.00 x 5, 6 ply, Type III) Michelin		1
47	551-659	. TIRE/TUBE - optional		1
48	451-739	. TUBE - (5.00 x 5)		1
49	551-792	. WHEEL ASSY - (See Figure 25 for component parts)		1
50	67106-000	. NUT - Nose gear axle		1
51	424-146	. PIN - (MS20392-1C19)		1
-51A	690-668	. WASHER - (NAS1149FN432P)		1
51B	424-052	. COTTER PIN - (MS24665-134)		1
52	69669-089	PLACARD - Nose Gear Service (See Figure 81-23)		RF
53	35669-007	PLACARD - Turn limit (See Figure 81-25)		RF
-55	85347-002	. LANDING LIGHT ASSY - (See Figure 69)	3246001 thru 3246017	RF
-55A	85347-003	. LANDING LIGHT ASSY - (See Figure 69)	3246018 and up 3257001 and up	RF

-Item not illustrated

When ordering, always specify Part Number, Description, and Serial Number of Aircraft

THIS PAGE INTENTIONALLY LEFT BLANK

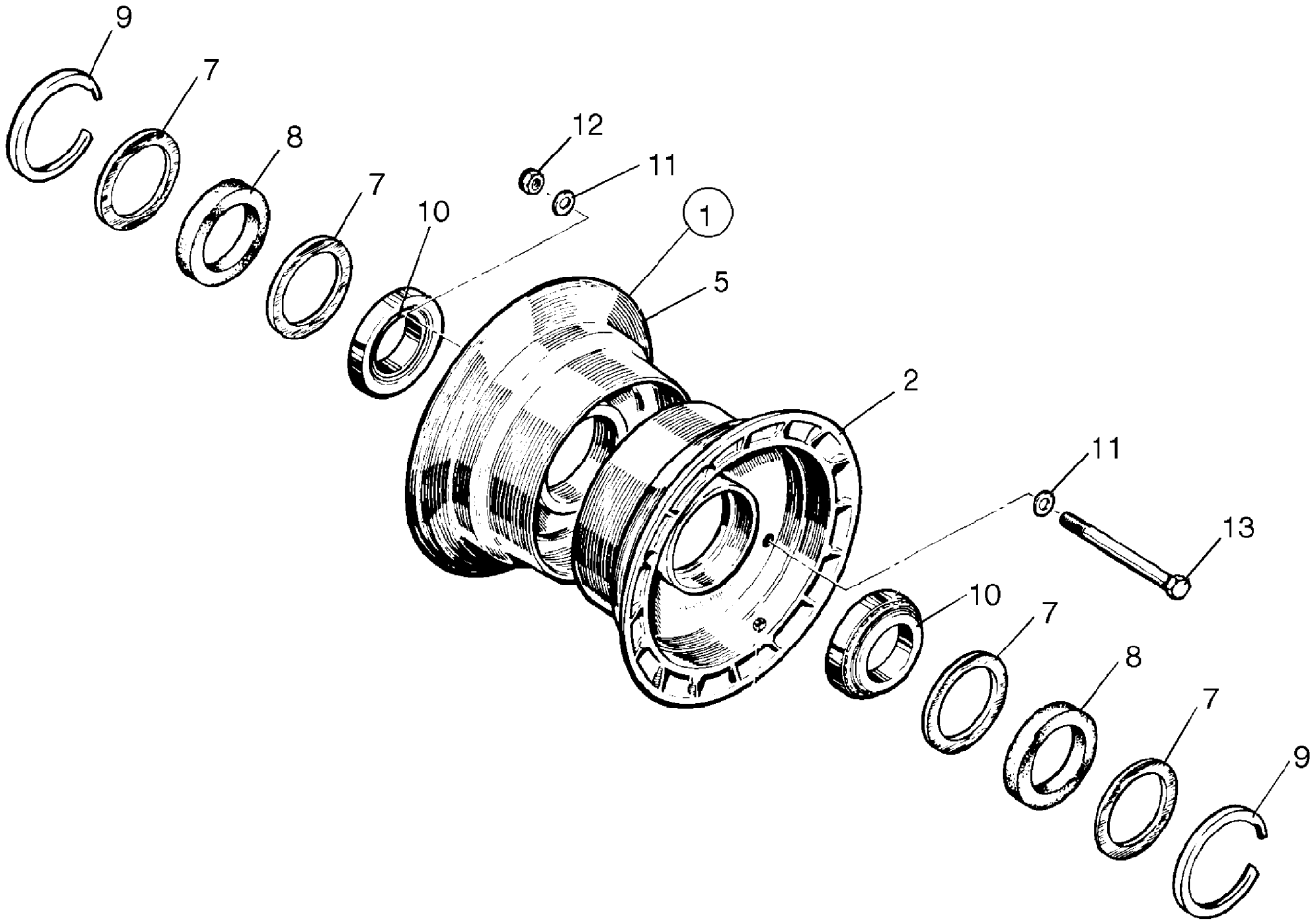

Figure 25. Nose Wheel Assembly

FIGURE ITEM	PART NUMBER	NOMENCLATURE	EFFECT FROM TO	UNITS PER ASSY
25	67100 (CB)	DRAWING - Gear Assy - Nose		
1	551-792	WHEEL ASSY - Nose		RF
2	756-667	. WHEEL HALF ASSY - Outer (with valve hole) (162-05300)		1
-3	757-831	. . CUP - Bearing		1
-4	755-048	. . GROMMET		1
5	756-668	. WHEEL HALF ASSY - Inner (161-05500)		1
-6	757-831	. . CUP - Bearing		1
7	756-007	. RING - Grease seal (153-00800)		4
8	754-804	. FELT - Grease seal (154-00600)		2
9	756-008	. RING - Snap (155-00200)		2
10	758-733	. BEARING - Cone (214-00400)		2
11	--- ---	. WASHER - Wheel bolt (095-10200)		6
12	--- ---	. NUT - Wheel bolt (094-10300)		3
13	--- ---	. BOLT - Wheel (103-10500)		3

-Item not illustrated

When ordering, always specify Part Number, Description, and Serial Number of Aircraft

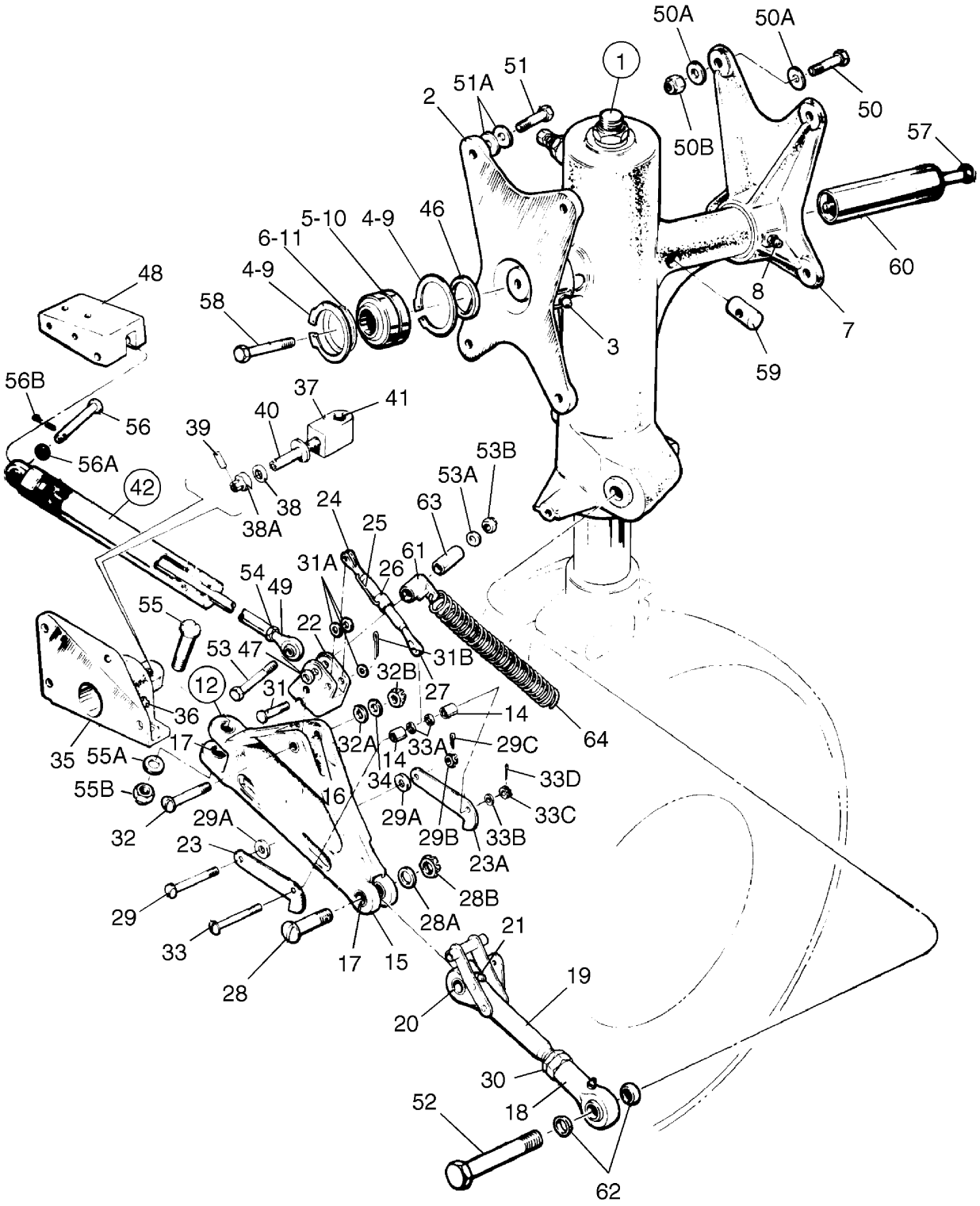

Figure 26. Main Gear Installation

FIGURE ITEM	PART NUMBER	NOMENCLATURE	EFFECT FROM TO	UNITS PER ASSY
26	95912 (BG)	DRAWING - Main Landing Gear Installation		
1	96766-020	GEAR ASSY - Main, left (Less tire, tube, wheel and brake assy) (See Figure 27 for component parts)		1
-1A	96766-021	GEAR ASSY - Main, right (Less tire, tube, wheel and brake assy) (See Figure 27 for component parts)		1
2	67040-014	FITTING ASSY - Forward trunnion, left		1
-2A	67040-015	FITTING ASSY - Forward trunnion, right		1
3	460-691	. FITTING - Lubricator (AN944-101)		1
4	484-719	. RING - Retainer (5008-175)		2
5	452-575	. BEARING - Spherical		1
6	62833-044	. WASHER		AR
7	67042-013	FITTING ASSY - Aft trunnion		2
8	460-691	. FITTING - Lubricator (AN944-101), straight		1
9	484-719	. RING - Retainer (5008-175)		2
10	452-575	. BEARING - Spherical		1
11	62833-044	. WASHER		AR
12	67025-009	TRUSS ASSY - Main gear, left		1
-12A	67025-010	TRUSS ASSY - Main gear, right		1
14	63900-130	. BUSHING - Main gear truss assy		2
15	67025-011	. LINK ASSY - Main gear truss assy		1
16	63900-089	. . BUSHING - Main gear truss assy		2
17	14843-016	. . BUSHING - Main gear truss assy		4
18	452-368	. BEARING ROD END Main gear truss assy		1
19	67797-006	. LINK ASSY - Main, gear truss assy, left		1
-19A	67797-007	. LINK ASSY - Main, gear truss assy, right		1
20	65003-044	. . BUSHING - Main gear truss assy		2
21	460-801	. . FITTING - Lubricator (MS15001-4)		1
22	67031-002	. FITTING - Gear retraction, left		1
-22A	67031-003	. FITTING - Gear retraction, right		1
23	67028-000	. HOOK - Main gear truss assy, forward left and right		1
23A	67028-003	. HOOK - Main gear truss assy, aft left		1
-23B	67028-004	. HOOK - Main gear truss assy, aft right		1
24	464-131	. FORK - (NAS645-16RS)		1
25	554-979	. CLIP - Turnbuckle (MS21256-1)		1
26	452-009	. BARREL - Turnbuckle (NAS649B-16S)		1
27	459-957	. EYE - Turnbuckle (NAS648-16LS)		1
28	402-927	. BOLT - (NAS464-6-16)		1
28A	690-620	. WASHER - (NAS1149F0632P)		1
28B	404-395	. NUT - (AN320-6)		1
-28C	424-059	. COTTER PIN - (MS24665-283)		1
29	400-880	. BOLT - (AN23-28)		1
29A	690-609	. WASHER - (NAS1149F0332P) (Use as needed to align hook with plate)		AR
29B	404-100	. NUT - (AN310-3)		1
29C	424-051	. COTTER PIN - (MS24665-132)		1
30	404-326	. NUT - Check (AN316-8R)		1
31	424-181	. PIN - Flat head (MS20392-2C25)		1
31A	690-609	. WASHER - (NAS1149F0332P)		3
31B	424-051	. COTTER PIN - (MS24665-132)		1
32	400-711	. BOLT - (AN24-26)		1

-Item not illustrated

When ordering, always specify Part Number, Description, and Serial Number of Aircraft

FIGURE ITEM	PART NUMBER	NOMENCLATURE	EFFECT FROM TO	UNITS PER ASSY
26-				
32A	690-611	. WASHER - (NAS1149F0463P)		1
32B	404-393	. NUT - (AN320-4)		1
-32C	424-051	. COTTER PIN - (MS524665-132)		1
33	400-880	. BOLT - (AN23-28)		1
33A	690-612	. WASHER - (NAS1149FN363P)		2
33B	690-609	. WASHER - (NAS1149F0332P)		1
33C	404-100	. NUT - (AN310-3)		1
33D	424-051	. COTTER PIN - (MS24665-132)		1
34	690-611	. WASHER - (NAS1149F0463P)(under nut as required)		AR
-34A	690-613	. WASHER - (NAS1149F0432P)(under nut as required)		AR
35	95643-008	BRACKET ASSY - Main gear truss, left (See Figure 2-19)		RF
-35A	95643-009	BRACKET ASSY - Main gear truss, right (See Figure 2-19A)		RF
36	460-801	. FITTING - Lubricator, 90° (MS15001-4)		1
37	78717-002	. STUD - Main gear side brace		1
38	62833-109	. WASHER - (.062 thick)		AR
38	62833-112	. WASHER - (.025 thick)		AR
38A	404-399	. NUT - (AN320-10)		1
39	480-691	. ROLL PIN - (52-028-125-0875)		1
40	67026-012	. BUSHING		1
41	65003-041	. BUSHING		1
42	96860-003	CYLINDER ASSY - Hydraulic (558-010) (Refer to Piper Service Bulletin #1023 - latest revision) (Use Seal Replacement Kit 652-363)		3
46	67198-000	WASHER - Main gear		2
47	95061-064	BUSHING		2
48	67071-000	BRACKET - Main gear cylinder, left (See Figure 4-45)		RF
-48A	67071-001	BRACKET - Main gear cylinder, right (See Figure 4-45A)		RF
49	452-334	BEARING		2
50	401-188	BOLT - (AN5-10A)		8
50A	690-628	WASHER - (NAS1149F0563P)		16
50B	404-531	NUT - (MS21042-5)		8
51	401-189	BOLT - (AN5-11A)		8
51A	690-628	WASHER - (NAS1149F0563P)		16
52	402-960	BOLT - (NAS464P8A-44)		2
-52A	690-631	WASHER - (NAS1149F0863P)		2
-52B	404-832	NUT - (MS21245-L8)		2
53	400-451	BOLT - (AN3-20A)		2
53A	690-612	WASHER - (NAS1149FN363P)		2
53B	404-526	NUT - (MS21042-3)		2
54	404-225	NUT - (AN315-4R)		2
55	402-921	BOLT - (NAS464P6-20)		2
55A	690-629	WASHER - (NAS1149F0663P)		2
55B	404-395	NUT - (AN320-6)		2
-55C	424-059	COTTER PIN - (MS24665-283)		2
56	424-187	PIN - (MS20392-2C37)		2
56A	690-612	WASHER - (NAS1149FN363P)		2
56B	424-052	COTTER PIN - (MS24665-134)		2

-Item not illustrated

When ordering, always specify Part Number, Description, and Serial Number of Aircraft

FIGURE ITEM	PART NUMBER	NOMENCLATURE	EFFECT FROM TO	UNITS PER ASSY
26-				
57	401-335	BOLT - (AN4-40A)		2
58	400-012	BOLT - (AN4-17A)		2
-58A	62833-124	WASHER		2
59	406-660	NUT - Barrel (1452-048)		4
60	67502-000	RETAINER ASSY - Main gear		2
61	67202-000	SWIVEL ASSY - Side brace spring attachment		2
62	21822-000	BUSHING - Tapered, truss assy		4
63	63900-085	BUSHING - Spring attachment		2
64	67203-000	SPRING - Main gear downlock		2
-65	67090-010	DOOR ASSY - Main gear, left (See Figure 30)		RF
-66	67090-011	DOOR ASSY - Main gear, right (See Figure 30)		RF

-Item not illustrated

When ordering, always specify Part Number, Description, and Serial Number of Aircraft

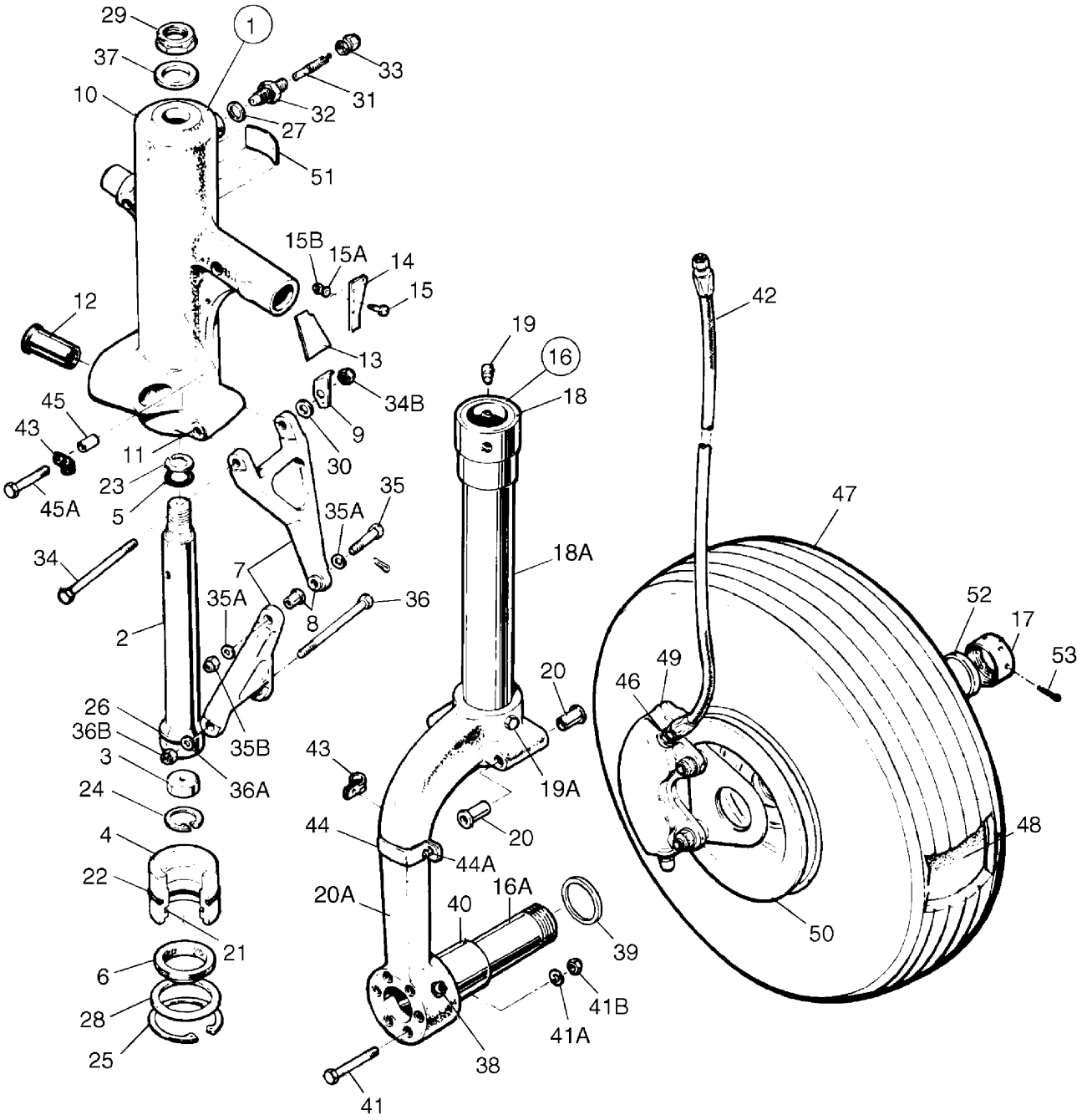

Figure 27. Main Gear Assembly

FIGURE ITEM	PART NUMBER	NOMENCLATURE	EFFECT FROM TO	UNITS PER ASSY
27	95912 (BG)	DRAWING - Main Landing Gear Installation		
	96766 (BB)	DRAWING - Main Gear Assy		
1	96766-020	GEAR ASSY - Main, left (Less tire, tube, wheel and brake assy)		RF
-1A	96766-021	GEAR ASSY - Main, right (Less tire, tube, wheel and brake assy)		RF
2	20754-002	. ORIFICE - Main landing gear		1
3	79800-002	. PLATE - Orifice		1
4	67755-000	. BEARING - Landing gear		1
5	484-790	. O-RING - (MS28775-210)		1
6	187-627	. STRIP - Wiper (10V90-117)		1
7	67012-002	. LINK ASSY - Landing gear torque		2
8	751-369	. . BUSHING - Landing gear strut (31796)		1
9	67023-000	. BRACKET - Squat switch actuator, left		1
-9A	67023-001	. ACTUATOR BRACKET - right	3246088 and up 3257001 and up	1
10	67926-040	. TRUNNION ASSY - Main gear, left		1
-10A	67926-041	. TRUNNION ASSY - Main gear, right		1
11	67026-007	. . BEARING - Main gear trunnion		2
12	67026-017	. . BUSHING - Main gear trunnion		1
13	37732-000	. . BRACKET - Gear switch, left only		1
14	67753-000	. . PLATE - Spring attachment		1
15	401-266	. . BOLT - (AN3-5A)		2
15A	690-609	. . WASHER - (NAS1149F0332P)		2
15B	404-526	. . NUT - (MS21042-3)		2
16	67037-006	. STRUT ASSY - Main gear		1
16A	67183-000	. . AXLE ASSY - Main gear strut		1
17	66820-000	. . . NUT - Main gear axle assy (with standard wheel cover P/N 83710-2)(See Figure 28)		1
17	66820-002	. . . NUT - Main gear axle assy (with optional wheel cover P/N 85313-2)(See Figure 28)		1
18	67036-000	. . BEARING - Main strut, upper		1
18A	95701-002	. . TUBE - Strut shoulder		1
19	20784-000	. . PIN - Main strut		2
19A	691-312	. . BOLT - (NAS6604-40)(tube - fork)		1
-19B	690-613	. . WASHER - (NAS1149F0432P)		1
-19C	404-530	. . NUT - (MS21042-4)		1
-19D	484-792	. . O-RING - (MS28775-218) (Top of fork below tube - fork bolt)		1
-19E	20787-000	. . PLUG - Strut (Top of fork below tube - fork bolt)		1
20	67026-007	. . BEARING - Main strut		4
20A	67038-000	. . FORK - Strut		1
21	484-799	. O-RING - (MS28775-327)		1
22	462-034	. O-RING - (AN6230-5)		1
23	484-714	. RING - Retainer (MS28782-15)		1
24	484-684	. RING - Snap (N5000-118MD)		1
25	484-685	. RING - Snap (N5000-250MD)		1
26	484-828	. RING - Compression (R19047)		1
27	462 024	. GASKET - Air valve (AN901-5A)		1
28	80122-088	. WASHER - Main gear		1
29	404-843	. NUT - (MS20364-1216C)		1
30	494-114	. WASHER - left (96312)		1
31	455-124	. CORE - Air valve (AN809-1)		1
32	453-124	. BODY - Air valve (AN812-1)		1

-Item not illustrated

When ordering, always specify Part Number, Description, and Serial Number of Aircraft

FIGURE ITEM	PART NUMBER	NOMENCLATURE	EFFECT FROM TO	UNITS PER ASSY
27-				
33	454-053	. CAP - Air valve (AN813-1B)		1
34	402-345	. BOLT - (AN175-33) left		1
34	402-344	. BOLT - (AN175-32) right		1
-34A	690-628	. WASHER - (NAS1149F0563P) right		1
34B	404-102	. NUT - (AN310-5)		1
-34C	424-051	. COTTER PIN - (MS24665-132)		1
35	402-312	. BOLT - (AN174-14)		1
35A	690-611	. WASHER - (NAS1149F0463P)		4
35B	404-101	. NUT - (AN310-4)		1
-35C	424-050	. COTTER PIN - (AN380-2-1)		1
-35D	554-735	. CLAMP - (between washer and link assy)		1
36	691-315	. BOLT - (NAS6605D46)		1
36A	690-619	. WASHER - (NAS1149F0532P)		1
36B	404-102	. NUT - (AN310-5)		1
-36C	424-051	. COTTER PIN - (MS24665-132)		1
37	80122-089	. WASHER - Main gear		1
38	401-329	. BOLT - (AN4-31A)(Axle retainer)		1
-38A	690-613	. WASHER - (NAS1149F0432P)		1
-38B	404-836	. NUT - (MS20364-428C)		1
39	63484-000	. BUSHING - Main gear, right	3246001 thru 3246087	1
40	63900-103	. BUSHING - Main gear, right	3246001 thru 3246087	1
40	82695-014	. BUSHING - Main gear, right	3246088 and up 3257001 and up	1
40	82695-014	. BUSHING - Main gear, left		1
41	401-320	. BOLT - (AN4-C20A)		12
41A	690-664	. WASHER - (NAS1149C0463R)		12
41B	404-530	. NUT - (MS21042-4)		12
42	63901-017	. HOSE ASSY - Brake line		2
43	554-734	. CLAMP		4
-43A	411-533	. SCREW - (MS35207-264)		1
-43B	690-609	. WASHER - (NAS1149F0332P)		1
-43C	404-526	. NUT - (MS21042-3)		1
44	67277-000	. CLAMP		2
44A	411-533	. SCREW - (MS35207-264)		2
-44B	690-609	. WASHER - (NAS1149F0332P)		1
-44C	404-526	. NUT - (MS21042-3)		1
-44D	654-099	. CLAMP		1
45	63900-011	. BUSHING - Main gear		2
45A	401-273	. BOLT - (AN3-14A)		1
-45B	690-609	. WASHER - (NAS1149F0332P)		1
-45C	404-526	. NUT - (MS21042-3)		1
46	476-648	. NIPPLE - (AN816-4D)		2
47	451-731	. TIRE - (6.00 x 6, 8 ply) specialty tire (optional)		2
47	551-609	. TIRE - (6.00 x 6, 8 ply)		2
48	451-735	. TUBE - (6.00 x 6)		2
49	551-725	. BRAKE ASSY - (heavy duty) (See Figure 29 for component parts)		2
50	551-770	. WHEEL ASSY - Main (heavy duty) (See Figure 28 for component parts)		2
51	69669-088	PLACARD - Oleo service instructions (See Figure 81-22)		RF
52	63900-115	. BUSHING - Main gear axle		2
53	424-071	. COTTER PIN - Main gear axle nut (MS24665-360)		

-Item not illustrated

When ordering, always specify Part Number, Description, and Serial Number of Aircraft

THIS PAGE INTENTIONALLY LEFT BLANK

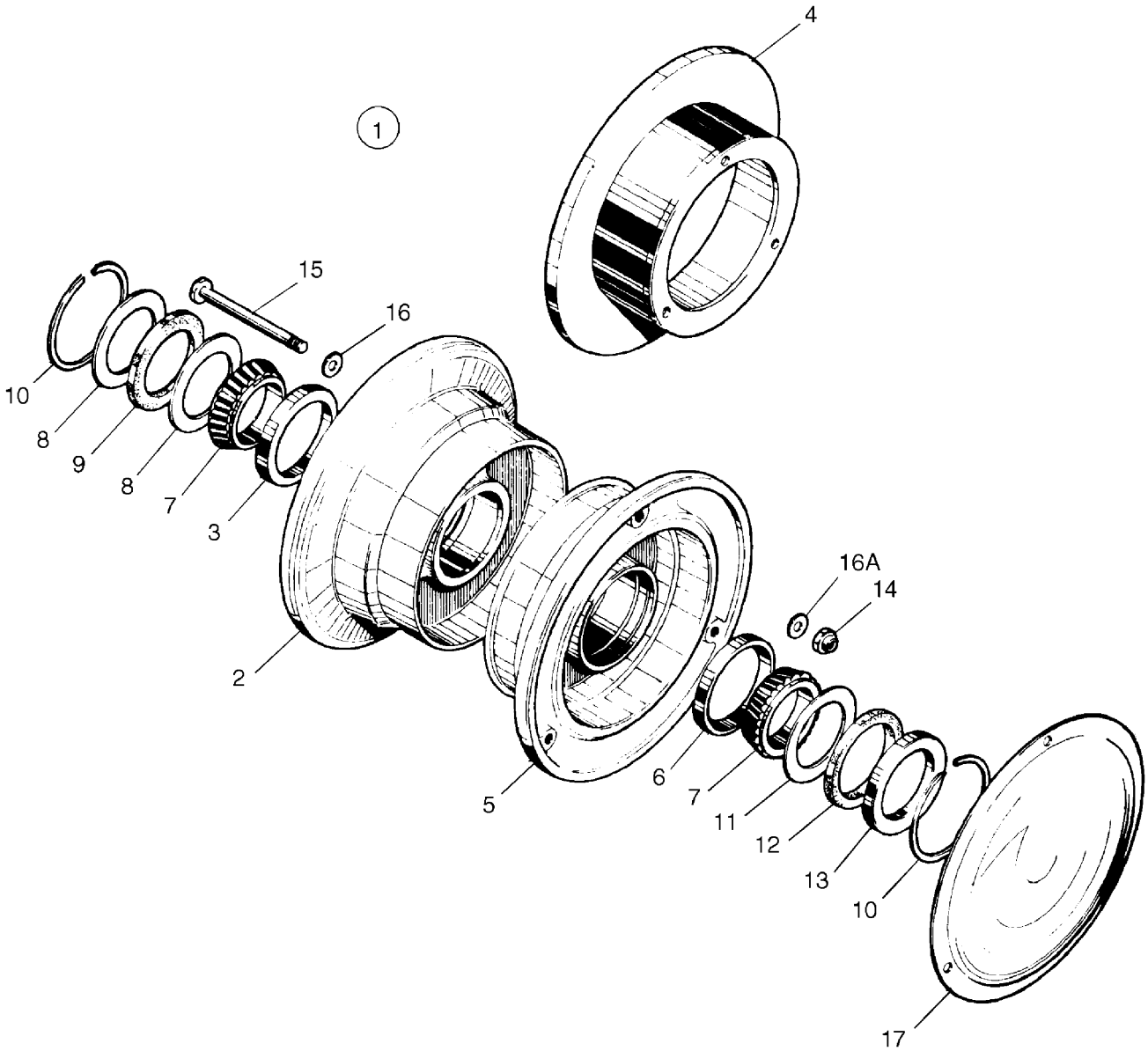

Figure 28. Main Wheel Assembly

FIGURE ITEM	PART NUMBER	NOMENCLATURE	EFFECT FROM TO	UNITS PER ASSY
28	96766 (BB)	DRAWING - Main Gear Assembly		
	85330 (New)	DRAWING - Wheel Cover Installation		
1	551-770	WHEEL ASSY - Main (heavy duty) (40-120C)		RF
2	763-751	. WHEEL - Half, inner (161-93B)		1
3	751-494	. . CUP - Bearing (214-00100)		1
4	--- ---	. DISC ASSY - Brake (164-216)		1
5	763-752	. WHEEL - Half, outer (162-87B)		1
6	751-494	. . CUP - Bearing (214-00100)		1
7	751-489	. BEARING - Cone (214-00200		2
8	755-999	. RING - Grease seal (153-4)		2
9	751-772	. FELT - Grease seal (154-3)		1
10	752-830	. RING - Snap (155-1)		2
11	755-929	. RING - Grease seal (153-3)		1
12	751-810	. FELT - Grease seal (154-13)		1
13	755-930	. RING - Grease seal (153-15)		1
14	--- ---	. NUT - Wheel bolt (094-127		6
15	758-520	. BOLT - Wheel (103-20400)		6
16	--- ---	. WASHER - Wheel bolt (095-0300)		12
16A	756-685	. WASHER - Wheel bolt (095-10500)		6
17	83710-002	COVER - Wheel		2
17	85313-002	COVER - Wheel (Optional)		3
-17A	415-530	SCREW - Wheel cover (MS35206-240)		3
-17B	690-673	WASHER - Wheel cover (MS35335-87)		3

-Item not illustrated

When ordering, always specify Part Number, Description, and Serial Number of Aircraft

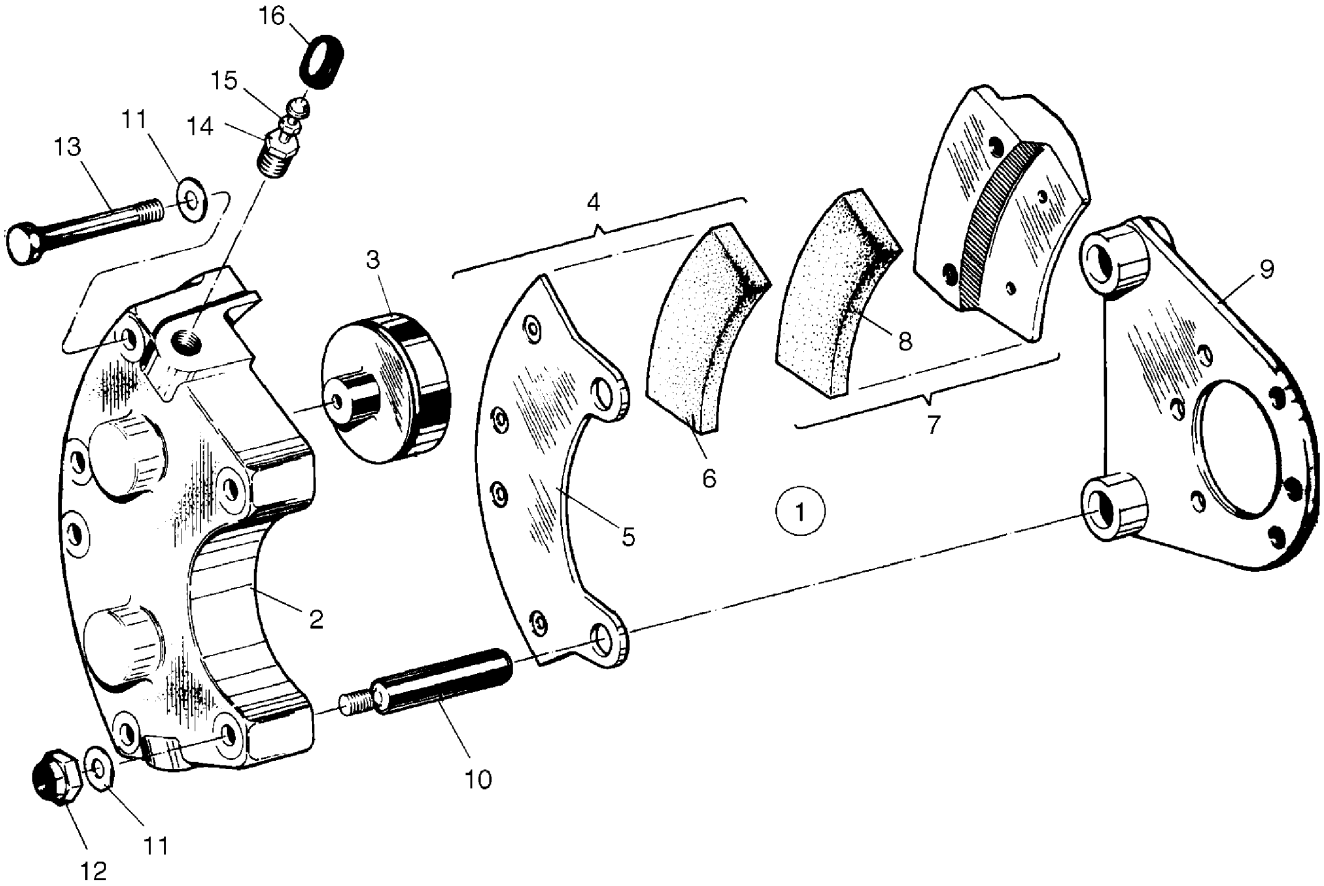

Figure 29. Brake Assembly

FIGURE ITEM	PART NUMBER	NOMENCLATURE	EFFECT FROM TO	UNITS PER ASSY
29	96766 (BB)	DRAWING - Main Gear Assembly		
1	551-725	BRAKE ASSY - (heavy duty)		RF
2	758-093	. CYLINDER - Brake (61-25)		1
3	757-483	. PISTON ASSY (92-18)		2
4	757-465	. PLATE ASSY - Pressure (73-27)		1
5	757-208	. . PLATE - Pressure (63-11)		1
6	761-197	. . LINING - Pressure plate (66-62)		2
7	757-484	. PLATE ASSY - Back (74-30)		2
8	761-197	. . LINING - Back plate (66-62)		2
9	451-786	. TORQUE PLATE ASSY (75-39)		1
10	753-407	. BOLT - Anchor (69-4)		2
11	690-613	. WASHER - (NAS1149F0432)		6
12	--- ---	. NUT - (AN365-428)		2
13	753-430	. BOLT (103-11700)		4
14	--- ---	. SEAT - Bleeder (37-206)		1
15	--- ---	. SCREW - Bleeder (FC6446)		1
16	753-850	. CAP - Bleeder (183-1)		1

-Item not illustrated

When ordering, always specify Part Number, Description, and Serial Number of Aircraft

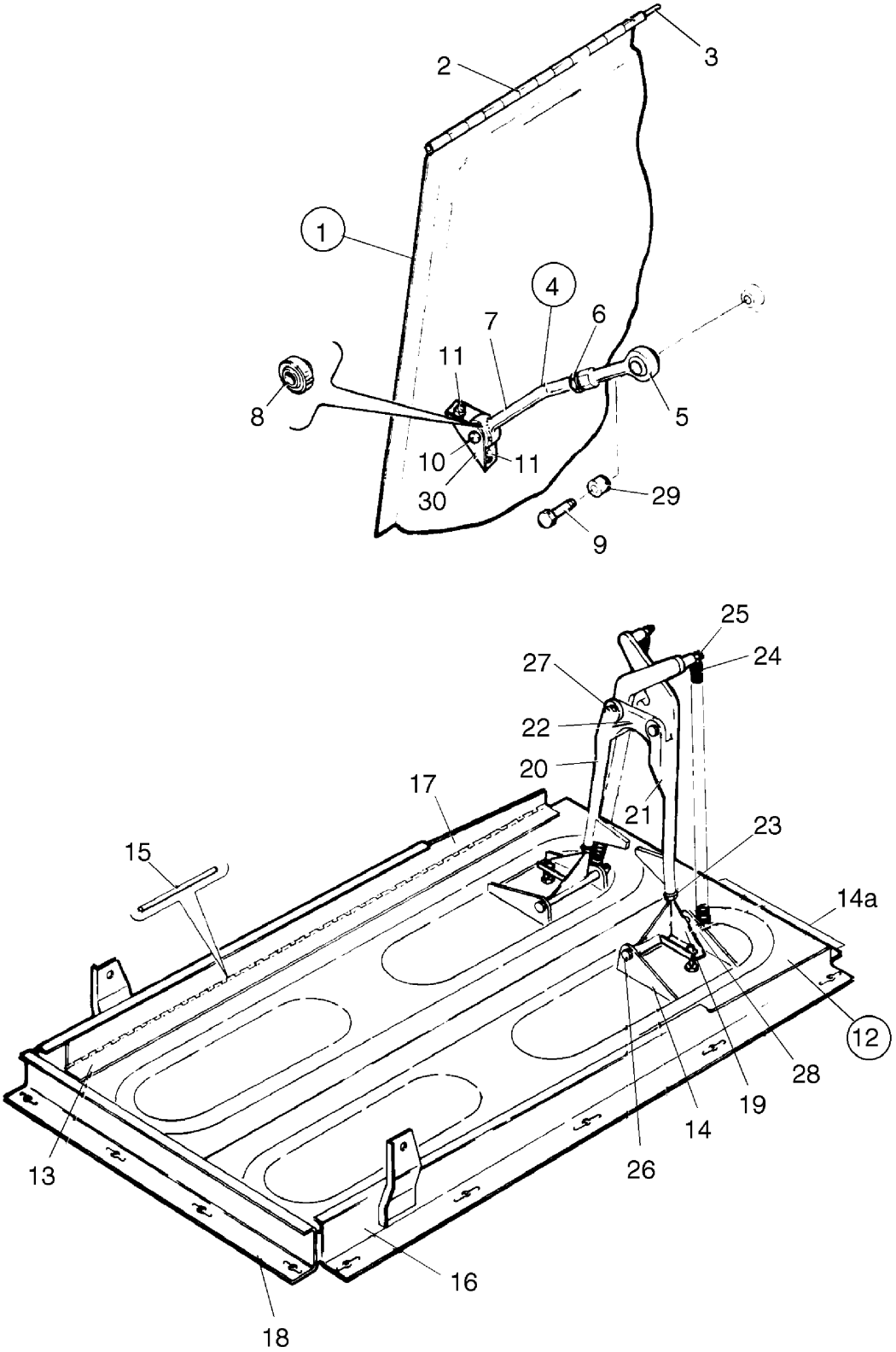

Figure 30. Landing Gear Door Installation

FIGURE ITEM	PART NUMBER	NOMENCLATURE	EFFECT FROM TO	UNITS PER ASSY
30	38069 (R)	DRAWING - Nose Gear Door Installation		
	95912 (BG)	DRAWING - Main Gear Installation		
1	67090-010	DOOR ASSY - Main gear, left		1
-1A	67090-011	DOOR ASSY - Main gear, right		1
2	67093-004	. HINGE HALF - Main gear door, left		1
-2A	67093-005	. HINGE HALF - Main gear door, right		1
3	63744-011	PIN - Hinge, main gear door		2
4	37722-002	ROD ASSY - Main gear door		2
5	452-335	. BEARING - Rod end		1
6	404-321	. NUT - (AN316-C4R)		1
7	37722-003	. ROD ASSY		1
8	452-584	. BEARING		1
9	401-257	BOLT - (AN3CH-10A)		2
-9A	690-617	WASHER - (NAS1149C0363R)		2
-9B	690-614	WASHER - (NAS1149C0332R)		4
10	400-867	BOLT - (AN23-15A)		2
-10A	690-617	WASHER - (NAS1149C0363R)		4
-10B	404-887	NUT - (MS21042-3)		2
11	411-536	SCREW - (MS35207-267)		4
-11A	690-612	WASHER - (NAS1149FN363P)		4
-11B	404-526	NUT - (MS21042-3)		4
12	38070-006	DOOR ASSY - Nose gear, left		1
-12A	38070-001	DOOR ASSY - Nose gear, right		1
13	38070-004	. HINGE HALF - Nose gear door		1
14	38075-000	. CHANNEL - Nose gear door		1
14A	38070-005	. ANGLE - Nose gear door		1
15	98510-004	PIN - Hinge gear door (21” length)		2
16	38076-000	SUPPORT ASSY - Nose gear door, left	3246001 and up	1
16	38076-008	SUPPORT ASSY - Nose gear door, left	3257001 and up	1
-16A	38076-001	SUPPORT ASSY - Nose gear door, right	3246001 and up	1
-16A	38076-009	SUPPORT ASSY - Nose gear door, right	3257001 and up	1
17	38076-004	. HINGE HALF - Nose gear door, left		1
-17A	38076-005	. HINGE HALF - Nose gear door, right		1
18	38074-000	CHANNEL ASSY - Lower cowl support		1
19	38071-000	LINK ASSY - Left nose gear door		1
-19A	38071-001	LINK ASSY - Right nose gear door		1
20	38108-000	ARM - Right nose gear door		1
21	38109-000	ARM - Left nose gear door		1
22	38082-000	STRIKER - Nose gear door		1
23	404-323	NUT - (AN316-5R)		2
24	687-924	SPRING		2
25	690-613	WASHER - (NAS1149F0432P)		2
-25A	424-000	COTTER PIN - (MS9245-27)		2
26	401-280	BOLT - (AN3-26A)		2
-26A	38071-008	BUSHING		2
-26B	690-612	WASHER - (NAS1149F0363P)		2
-26C	404-526	NUT - (MS21042-3)		2
27	400-871	BOLT - (AN23-19A)		2
-27A	63900-168	BUSHING		2
-27B	690-609	WASHER - (NAS1149F0332P)		4
-27C	690-619	WASHER - (NAS1149F0532P)		2
-27D	405-350	NUT - (MS21083-N4)		2
28	411-532	SCREW - (MS35207-263)		2

-Item not illustrated

When ordering, always specify Part Number, Description, and Serial Number of Aircraft

FIGURE ITEM	PART NUMBER	NOMENCLATURE	EFFECT FROM TO	UNITS PER ASSY
30-				
-28A	690-612	WASHER - (NAS1149F0363P)		2
-28B	95061-020	BUSHING		2
-28C	404-526	NUT - (MS21042-3)		2
29	63900-147	BUSHING		2
30	67091-000	BRACKET - Main gear door		2

-Item not illustrated

When ordering, always specify Part Number, Description, and Serial Number of Aircraft

THIS PAGE INTENTIONALLY LEFT BLANK

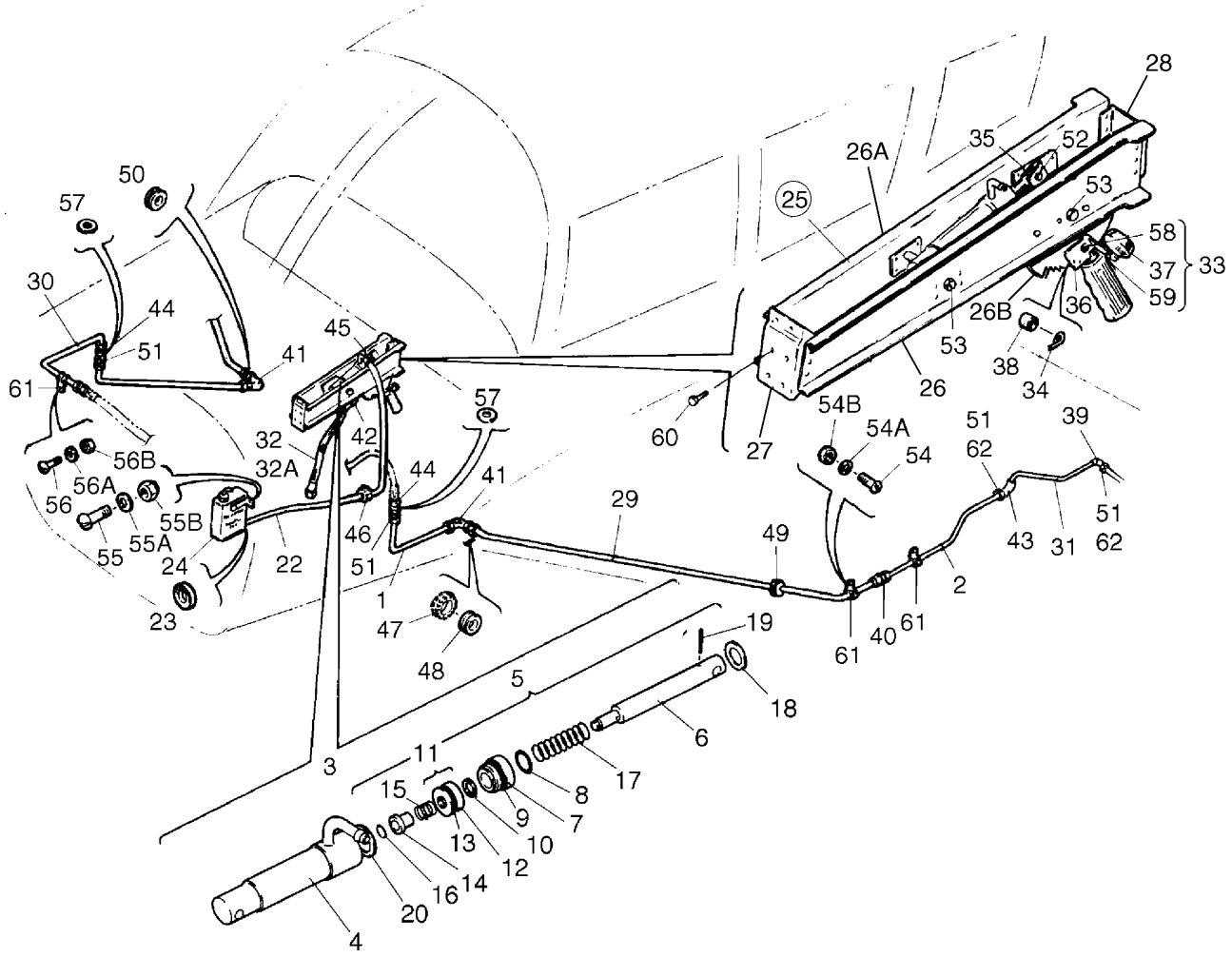

Figure 31. Hand Brake Installation

FIGURE ITEM	PART NUMBER	NOMENCLATURE	EFFECT FROM TO	UNITS PER ASSY
31	69312 (V)	DRAWING - Hand Brake Installation		
	38012 (T)	DRAWING - Brake System Installation		
1	63324-004	TUBE ASSY		2
2	67700-323	TUBE ASSY		2
3	455-938	CYLINDER ASSY - Master (10-22)		1
4	753-956	*HYDRAULIC CYLINDER ASSY - (189-9)		1
5	755-948	*PISTON ROD ASSY - (182-7)		1
6	755-949	**ROD - Piston (142-9)		1
7	751-889	**GLAND - Packing (141-10)		1
8	484-701	**PACKING - “O” Ring (AN 6227-7)		1
9	484-727	**PACKING - “O” Ring (AN 6227-12)		1
10	753-172	**WASHER - Dyna-Seal (110-3/16)		1
11	757-216	**PISTON ASSY - (92-19)		1
12	757-217	***PISTON - (148-10)		1
13	484-706	***PACKING - “O” Ring (AN 6227-11)		1
14	753-381	**BUSHING - (145-15)		1
15	756-117	**SPRING - (82-8)		1
16	752-855	**RING - Snap (155-5)		1
17	756-118	**SPRING - (82-9)		1
18	407-567	**WASHER - (AN 960-616)		1
19	755-882	**ROLL PIN - (223-1)		1
20	755-950	**RING - Snap (155-10)		1
22	63913-132	HOSE - Flexible		1
23	63915-006	DISC - Firewall sealing		1
24	68464-000	RESERVOIR ASSY - Brake cylinder		1
25	67136-004	SUPPORT ASSY - Hand brake		1
26	67137-003	* CHANNEL ASSY - Brake Support, Left		1
26A	67138-005	* CHANNEL ASSY - Brake Support, Right		1
26B	63354-001	* * RATCHET - Brake Handle		1
27	67139-000	* CHANNEL - Brake Support, Forward		1
28	89300-005	* CHANNEL - Brake Support, Aft		1
-28A	486-317	SCREW - (Attaches hand brake support assy to left instrument panel)	3246001 thru 3246017	2
-28A	486-318	SCREW - (Attaches hand brake support assy to left instrument panel)	3246018 and up 3257001 and up	2
29	68467-000	TUBE ASSY		2
30	68466-000	TUBE ASSY - Right		1
31	67700-324	TUBE ASSY - Left		1
-31A	67700-325	TUBE ASSY - Right		1
32	63901-030	HOSE ASSY - Flexible (with dual toe brakes)		1
32	63901-065	HOSE ASSY - Flexible (with dual toe brakes)(optional)		1
32A	63901-009	HOSE ASSY - Flexible (with single toe brakes)		1
32A	63901-059	HOSE ASSY - Flexible (with single toe brakes)(optional)		1
33	69312-006	HAND BRAKE ASSY		1
34	63356-000	SPRING - Brake handle		1
35	63357-000	HANDLE ASSY - Brake		1
36	67135-003	LATCH ASSY - Brake handle		1
37	63914-007	KNOB ASSY - Parking brake		1
38	63900-131	BUSHING		1
39	458-900	ELBOW - Bulkhead (AN833-4D)		2
40	491-050	UNION - (AN815-4D)		2
41	458-880	ELBOW - (AN821-4D)		2
42	458-894	ELBOW - (MS20822-4D)		1

-Item not illustrated

When ordering, always specify Part Number, Description, and Serial Number of Aircraft

FIGURE ITEM	PART NUMBER	NOMENCLATURE	EFFECT FROM TO	UNITS PER ASSY
31-				
43	458-900	ELBOW - Bulkhead (AN833-4D)		2
44	491-060	UNION - (AN832-4D)		2
45	554-861	CLAMP - Hose (SAE TY-F4)		2
46	63976-017	GROMMET		1
47	63976-018	GROMMET		1
48	434-155	GROMMET - (MS35489-7S)		2
49	434-151	GROMMET - (MS35489-10S)		2
50	434-160	GROMMET - (MS35489-8S)		1
51	477-618	NUT - (AN924-4D)		6
52	424-178	PIN - (AN393-19)		1
-52A	424-051	COTTER PIN - (AN380-2-2)		1
-52B	690-609	WASHER - (NAS1149F0332P)		2
53	400-113	BOLT - (AN4-20)		2
-53A	690-611	WASHER - (NAS1149F0463P)		6
-53B	404-101	NUT - (AN310-4)		2
-53C	424-051	COTTER PIN - (AN380-2-2)		2
54	411-532	SCREW - (MS35207-263)		4
54A	690-609	WASHER - (NAS1149F0332P)		4
54B	404-526	NUT - (MS21042-3)		4
55	411-532	SCREW - (MS35207-263)		2
55A	690-617	WASHER - (NAS1149C0363R)		4
55B	404-526	NUT - (MS21042-3)	3246001 thru 3246087	2
56	411-586	SCREW - (MS35207-265)		1
56A	407-043	LOCKWASHER - (MS35338-43)		1
56B	404-224	NUT - (AN315-3R)		1
57	690-630	WASHER - (NAS1149F0763P)(2-left, 2-right)		4
58	400-876	BOLT - (AN23-24A)		1
-58A	690-612	WASHER - (NAS1149FN363P)		3
-58B	404-526	NUT - (MS21042-3)		1
59	416-994	SCREW - (AN526-1032R6)		1
-59A	407-043	WASHER - Lock (MS35338-43)		1
60	400-438	BOLT - (AN3-4A)		2
		(Attaches hand brake support assy to bulkhead)		
-60A	690-612	WASHER - (NAS1149FN363P)		2
-60B	404-526	NUT - (MS21042-3)		2
61	454-929	CLAMP		5
62	690-630	WASHER - (NAS1149F0763P)		4

-Item not illustrated

When ordering, always specify Part Number, Description, and Serial Number of Aircraft

THIS PAGE INTENTIONALLY LEFT BLANK

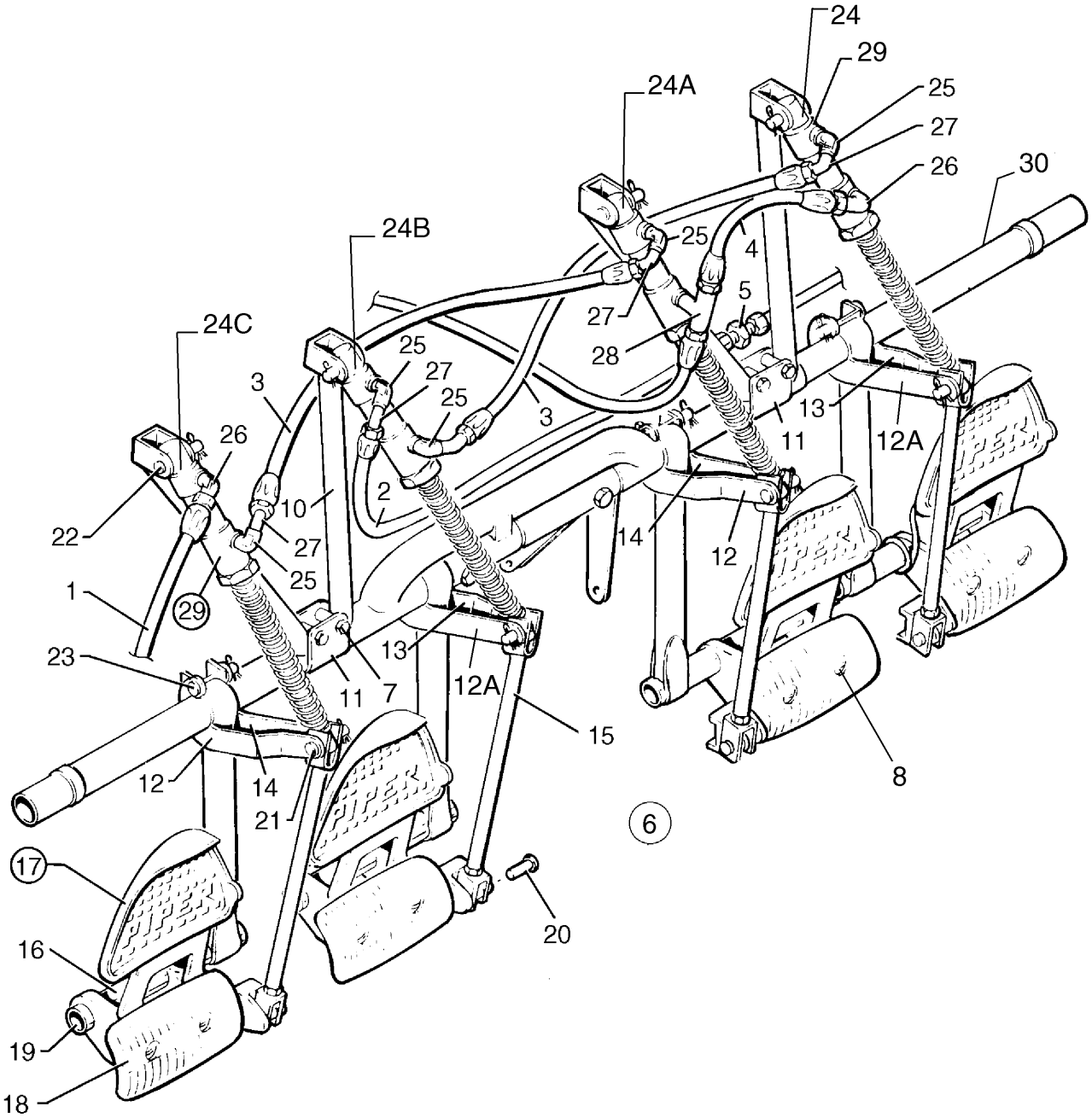

Figure 32. Toe Brake Installation

FIGURE ITEM	PART NUMBER	NOMENCLATURE	EFFECT FROM TO	UNITS PER ASSY
32	38012 (T)	DRAWING - Brake System Installation		
	38542 (AM)	DRAWING - Control System Installation		
1	63901-028	HOSE ASSY - Flexible		1
2	63901-009	HOSE ASSY - Flexible		1
3	63901-029	HOSE ASSY - Flexible		2
4	63901-030	HOSE ASSY - Flexible		1
5	491-050	UNION - (AN 815-4D)		1
6	63473-006	CYLINDER ASSY - Dual Toe Brake		1
7	400-444	* BOLT - (AN 3-13A)		4
-7A	690-612	* WASHER - (NAS1149FN363P)		4
-7B	404-526	* NUT - (MS21042-3)		4
8	400-443	* BOLT - (AN3-12A)		4
-8A	690-612	* WASHER - (NAS1149FN363P)		4
-8B	404-526	* NUT - (MS21042-3)		4
10	63464-005	* BRACE ASSY - Toe Brake		2
11	63468-000	* BRACKET - Toe Brake		2
12	63469-000	* ARM - Toe Brake		2
12A	63470-001	* ARM - Toe Brake		2
13	63469-001	* ARM - Toe Brake		2
14	63470-000	* ARM - Toe Brake		2
15	79430-000	* CLEVIS ASSY - Toe Brake (Non-Adjustable)		4
16	63478-000	* SPACER - Toe Pedal		4
17	63485-000	* PEDAL ASSY - Toe Brake, Left Inboard		1
-17A	63485-002	* PEDAL ASSY - Toe Brake, Left Outboard (For service use only)		1
-17B	63485-001	* PEDAL ASSY - Toe Brake, Right Inboard		1
-17C	63485-003	* PEDAL ASSY - Toe Brake, Right Outboard (For service use only)		1
18	62867-002	* * PAD ASSY - Brake Pedal		4
19	453-714	* BEARING - Brake Pedal		8
20	424-195	* PIN - Flat Head (MS 20392-2C13)		4
20	424-176	* PIN - Flat head (MS20392-2C15)(.641 long) (May be used in place of MS20392-2C13 as required for length)		4 4
-20A	690-609	* WASHER - (NAS1149F0332P)		4
-20B	424-051	* COTTER PIN - (MS24665-132)		4
21	424-181	* PIN - Flat Head (MS 20392-2C25)		4
-21A	690-612	* WASHER - (NAS1149FN363P)		4
-21B	424-051	* COTTER PIN - (MS24665-132)		4
22	424-184	* PIN - Flat Head (MS 20392-2C31)		4
-22A	690-612	* WASHER - (NAS1149FN363P)		4
-22B	424-051	* COTTER PIN - (MS24665-132)		4
23	424-357	* PIN - Flat Head (MS 20392-2C39)		4
-23A	690-612	* WASHER - (NAS1149FN363P)		4
-23B	424-051	* COTTER PIN - (MS24665-132)		4
24	63481-002	* FITTING ASSY - Master Cylinder		1
24A	63481-003	* FITTING ASSY - Master Cylinder		1
24B	63481-009	* FITTING ASSY - Master Cylinder		1
24C	63481-005	* FITTING ASSY - Master Cylinder		1
25	458-904	* * ELBOW - (AN 914-1D)		AR
26	458-894	* * ELBOW - (MS 20822-4D)		1
27	458-891	* * ELBOW - (MS 20823-4D)		AR

-Item not illustrated

When ordering, always specify Part Number, Description, and Serial Number of Aircraft

FIGURE ITEM	PART NUMBER	NOMENCLATURE	EFFECT FROM TO	UNITS PER ASSY
32-				
28	488-499	* * TEE - (MS 20825-4D) (Used on 63481-003 only)	1	
29	455-968	* * CYLINDER ASSY - Master (10-30) Cleveland (See Figure 33 for component parts)	4	
29	455-944	* * CYLINDER ASSY - Master (17000) Gar-Kenyon (See Figure 33 for component parts)	4	
30	63459-018	* PEDAL ASSY - Rudder (See Figure 62 for component parts)	1	

-Item not illustrated

When ordering, always specify Part Number, Description, and Serial Number of Aircraft

THIS PAGE INTENTIONALLY LEFT BLANK

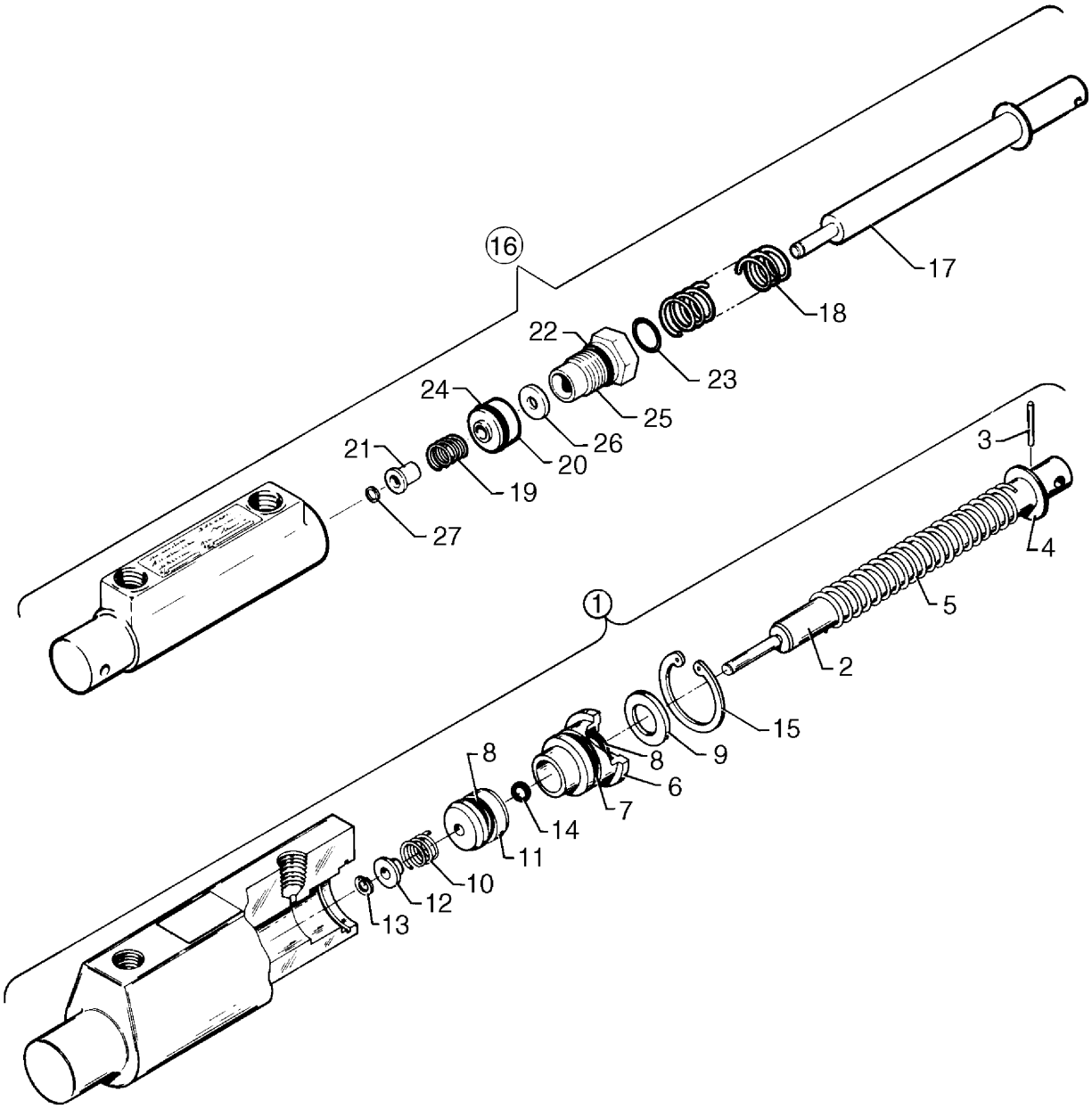

Figure 33. Toe Brake Master Cylinder Assembly

FIGURE ITEM	PART NUMBER	NOMENCLATURE	EFFECT FROM TO	UNITS PER ASSY
33	38012 (T)	DRAWING - Brake System Installation		
	63481 (AG)	DRAWING - Master Cylinder Assembly		
1	455-968	CYLINDER ASSY - Master (10-30) Cleveland		RF
2	--- ---	*PISTON ROD ASSY - (182-22)		1
		(must order 455-968 master cylinder assy)		
3	757-318	**ROLL PIN - (223-00500)		1
4	756-622	**WASHER - (095-10100)		1
5	756-118	**SPRING - (82-9)		1
6	755-082	**GLAND - Packing (141-25)		1
7	756-018	**O-RING - (101-01100)		1
8	756-016	**O-RING - (101-00800)		2
9	756-621	**WASHER - Wiper (095-01300)		1
10	757-580	**SPRING - (082-02100)		1
11	763-450	**PISTON - (148-25)		1
12	758-457	**BUSHING - (145-58)		1
13	762-586	**RING - Snap (T5304-15)		1
14	762-585	**O-RING - (101-1)		1
15	762-695	*RING - Snap (155-47)		1
16	455-944	CYLINDER ASSY - Master (17000) Gar-Kenyon		4
17	757-480	*PISTON ROD AND RING ASSY - (95404)		1
		Includes Spring Retaining Ring		
18	762-276	*SPRING - (17005)		1
19	762-277	*SPRING - (17006)		1
20	757-479	*PISTON - (17003)		1
21	762-275	*SLEEVE - (17007)		1
22	752-584	*O-RING - (MS 28775-113)		1
23	484-788	*O-RING - (MS 28775-012)		1
24	752-585	*O-RING - (MS 28775-110)		1
25	754-848	*FITTING - (17002)		1
26	494-177	*SEAL - (110 3/ 16)		1
27	762-531	*RING - Retaining (XRC-313)		1

-Item not illustrated

When ordering, always specify Part Number, Description, and Serial Number of Aircraft

THIS PAGE INTENTIONALLY LEFT BLANK

SECTION V
CABIN EQUIPMENT GROUP

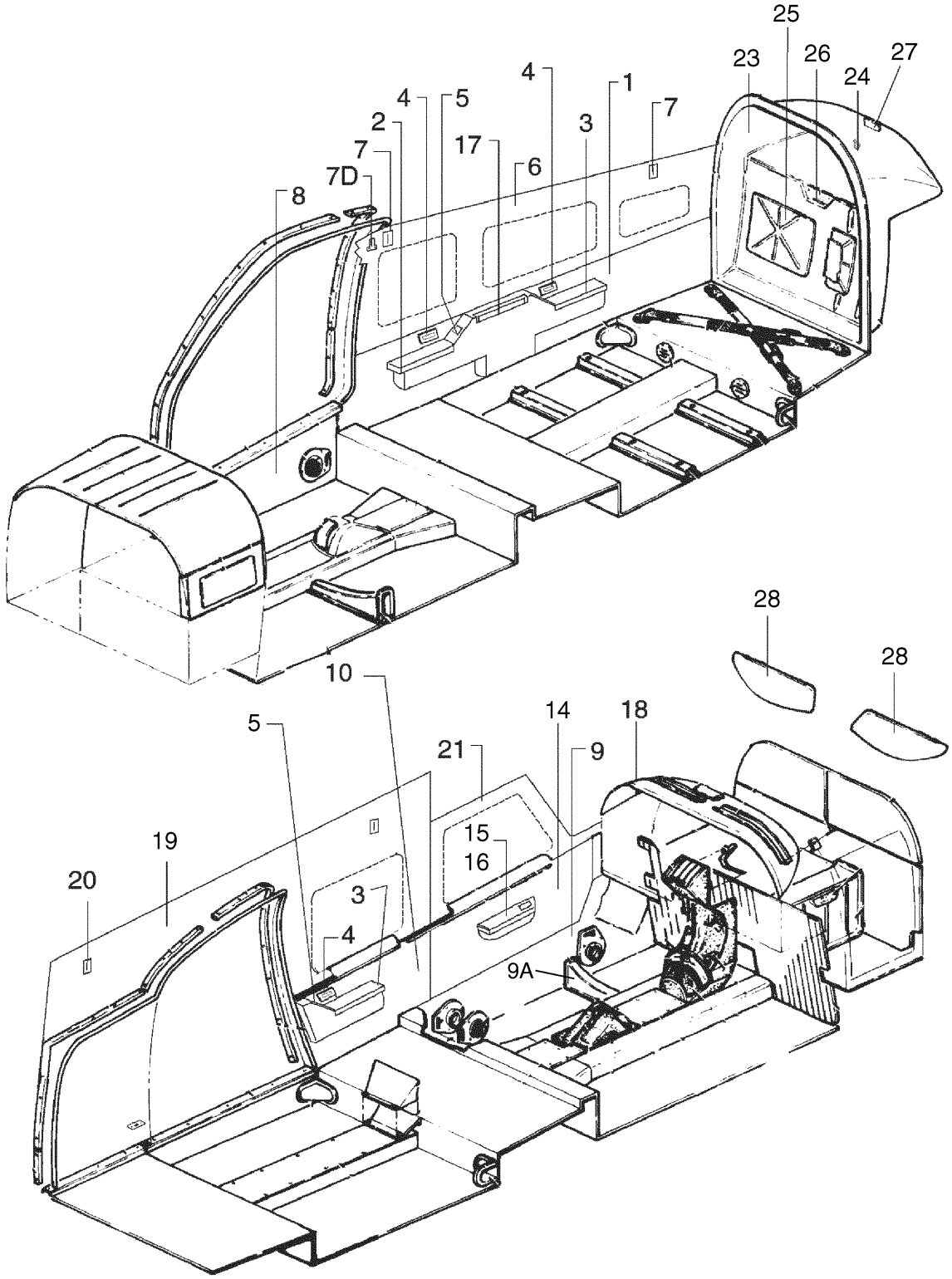

Figure 34. Cabin Finishing Installation

FIGURE ITEM	PART NUMBER	NOMENCLATURE	EFFECT FROM TO	UNITS PER ASSY
34	85200 (CL)	DRAWING - Interior Installation		
	85210 (BN)	DRAWING - Interior Details		
	101230 (M)	DRAWING - Interior Details		
	85366 (E)	DRAWING - Executive Writing Table, Details and Installation		
	66991 (AH)	DRAWING - Sun Visor Installation	3246001 thru 3246017	
	85458 (F)	DRAWING - Sun Visor Installation	3246018 and up 3257001 and up	
	38165 (V)	DRAWING - Finishing Install, Forward Baggage Compartment		
	82235 (F)	DRAWING - Fire Extinguisher Installation	3246001 thru 3246017	
	100801 (D)	DRAWING - Fire Extinguisher Installation	3246018 and up 3257001 and up	
	87713 (M)	DRAWING - Glaresheild Installation	3246001 thru 3246087	
	78734 (V)	DRAWING - Bulkhead Installation - Cabin, Aft		
1	85210-040	PANEL ASSY - Side, lower, right (When ordering, specify color)	3246001 thru 3246017	1
1	85210-190	PANEL ASSY - Side, lower, right (When ordering, specify color)	3246018 thru 3246059	1
1	85210-278	PANEL ASSY - Side, lower, right (When ordering, specify color)	3246060 thru 3246087	1
1	85210-269	PANEL ASSY - Side, lower, right (When ordering, specify color) (Used with 6 seat interior)	3246088 and up 3257001 and up	1
1	85210-296	PANEL ASSY - Side, lower, right (When ordering, specify color) (Used with 5 seat interior)	3246088 thru 3246181 3257001 thru 3257198	1
2	85210-060	. ARMREST ASSY - Forward		1
3	85210-059	. ARMREST ASSY (Used with 6 seat interior)		2
3	85210-242	. ARMREST ASSY (Used with 5 seat interior)	3246088 thru 3246181 3257001 thru 3257198	2
4	584-402	. RECEPTACLE - Ashtray (E83B-5404-788-AW)	3246001 thru 3246087	3
5	85210-006	. SWITCH ASSY - Light		2
6	85210-012	PANEL ASSY - Side, upper, right	3246001 thru 3246087	1
6	85210-301	PANEL ASSY - Side, upper, right	3246088 thru 3246158 3257001 thru 3257139	1
6	101230-012	PANEL ASSY - Side, upper, right	3246159 and up 3257140 and up	1
7	89567-005	. BEZEL - Shoulder harness	3246001 thru 3246158 3257001 thru 3257139	2
7	89567-015	. BEZEL - Shoulder harness	3246159 and up 3257140 and up	2
-7A	415-521	. SCREW - (MS35206-231)	3246159 and up 3257140 and up	2
-7B	594-016	. WASHER CAP - (APP0SC46032M)	3246159 and up 3257140 and up	2
-7C	406-362	. NUT - Speed (C8095-632-1)	3246159 and up 3257140 and up	2
7D	76221-000	. CLIP - Shoulder harness retaining	3246001 thru 3246158 3257001 thru 3257139	1
-7E	415-378	. SCREW - (MS51957-45)	3246001 thru 3246158 3257001 thru 3257139	2

-Item not illustrated

When ordering, always specify Part Number, Description, and Serial Number of Aircraft

FIGURE ITEM	PART NUMBER	NOMENCLATURE	EFFECT FROM TO	UNITS PER ASSY
34-				
-7F	690-618	. WASHER - (NAS1149FN816P)	3246001 thru 3246108 3257001 thru 3257139	
-7G	404-529	. NUT - (MS21042-08)	3246001 thru 3246158 3257001 thru 3257139	2
8	85210-104	PANEL ASSY - Cockpit, side, lower, right		1
9	85210-103	PANEL ASSY - Cockpit, side, lower, left		1
9A	66615-004	COVER ASSY		2
10	85210-084	PANEL ASSY - Side, lower, left	3246001 thru 3246017	1
10	85210-191	PANEL ASSY - Side, lower, left	3246018 thru 3246087	1
10	85210-221	PANEL ASSY - Side, lower left (Used with 5 seat interior)	3246088 thru 3246181 3257001 thru 3257198	1
10	85210-252	PANEL ASSY - Side, lower, left (Used with 6 seat interior)	3246088 and up 3257001 and up	1
10	85210-480	PANEL ASSY - Side, lower, left (Used with 6 seat interior) (Required with Avidyne Installation)	3246218 and up 3257339 and up	
-10A	85210-006	. SWITCH ASSY - Light		1
-11	100590-004	. COVER PLATE ASSY - Intercom	3246018 thru 3246087	1
-12	100902-004	. SENSOR ASSY - Cabin temperature	3246088 thru 3246181 3257011 thru 3257198	1
14	85210-108	PANEL ASSY - Pilot's side, lower	3246001 thru 3246087	1
14	85210-238	PANEL ASSY - Pilot's side, lower	3246088 and up 3257001 and up	1
15	85210-076	. ARMREST ASSY - Pilot's	3246001 thru 3246087	1
16	85210-230	. ARMREST ASSY - Pilot's	3246088 and up 3257001 and up	1
17	488-196	TABLE TOP - (AQI-NP-001)		1
-17A	85366-004	GUIDE - Forward		1
-17B	85366-003	GUIDE - Aft		1
18	85210-083	COVER - Cowl deck	3246001 thru 3246087	1
18	85210-309	COVER - Cowl deck	3246088 thru 3246187 3257001 thru 3257219	1
18	85210-310	COVER - Cowl deck	3246188 thru 3246217 3257220 thru 3257338	1
18	101759-002	COVER - Cowl deck (Required for Avidyne Installation)	3246218 and up 3257339 and up	
19	85210-095	PANEL ASSY - Aft cabin, upper, left	3246001 thru 3246087	1
19	85210-298	PANEL ASSY - Aft cabin, upper, left	3246088 thru 3246158 3257001 thru 3257139	1
19	101230-011	PANEL ASSY - Aft cabin, upper, left	3246159 and up 3257140 and up	1
20	89567-005	. BEZEL - Seat belt	3246001 thru 3246158 3257001 thru 3257139	2
20	89567-015	. BEZEL - Seat belt	3246159 and up 3257140 and up	2
-20A	415-521	. SCREW - (MS35206-231)	3246159 and up 3257140 and up	2
-20B	594-016	. WASHER - Cap (APP0SC46032M)	3246159 and up 3257140 and up	2
-20C	406-362	. NUT - Speed (C8095-632-1)	3246159 and up 3257140 and up	2
21	85210-158	PANEL ASSY - Close-out, pilot window	3246001 thru 3246017	1
21	85210-188	PANEL ASSY - Close-out, pilot window	3246018 thru 3246087	1
21	85210-222	PANEL ASSY - Close-out, pilot window	3246088 and up 3257001 and up	1

-Item not illustrated

When ordering, always specify Part Number, Description, and Serial Number of Aircraft

FIGURE ITEM	PART NUMBER	NOMENCLATURE	EFFECT FROM TO	UNITS PER ASSY
34-				
-22	79849-006	BULKHEAD ASSY - Cabin, Aft		1
-22	79849-015	BULKHEAD ASSY - Cabin, Aft		1
23	79837-011	. HATSHELF	3246001 thru 3246017	1
23	79837-013	. HATSHELF	3246018 and up 3257001 and up	1
24	487-629	. . STUD ASSY - Coat hanger (KM894-1A)		2
-24A	407-800	. . WASHER - (AN970-3)		1
-24B	690-616	. . WASHER - (NAS1149FN832P)		1
-24C	404-529	. . NUT - (MS21042-08)		1
25	79445-005	. DOOR		1
26	96272-000	PLACARD - Maximum baggage (See Figure 84)		RF
27	66787-000	PLACARD - Soft wear only (See Figure 84)		RF
28	65866-003	BLADE - Sun visor, pilot and copilot (Hardware not shown. See installation drawing)	3246001 thru 3246017	2
28	85515-002	BLADE - Sun visor, pilot and copilot (Hardware not shown. See installation drawing)	3246018 and up 3257001 and up	2
-29	459-886	FIRE EXTINGUISHER (P-1.25-1211A)	3246001 thru 3246017	1
-29	100632-002	FIRE EXTINGUISHER AND BRACKET (Installed on back of RH passenger seat on 6 seat install, or installed on fwd side of entertainment console of 5 seat optional install)	3246018 and up 3257001 and up	1
-30	82227-003	BRACKET - Fire extinguisher	3246001 thru 3246017	2
-31	416-787	SCREW - (MS35191-274) (Attaches fire extinguisher holder bracket to 82227-003 bracket)	3246001 thru 3246017	2
-31	411-530	SCREW - (MS35207-261) (Through fire extinguisher into 100801-005 support assy)(Used on 6 seat install)	3246018 and up 3257001 and up	2
-31	415-318	SCREW - (MS27039-1-08) (Through fire extinguisher bracket into entertainment console)(Used on 5 seat install)	3246088 thru 3246181 3257001 thru 3257198	4
-31A	690-609	WASHER - (NAS1149F0332P) (1 under screw head, 1 between fire extinguisher holder bracket and 82227-003 bracket)	3246001 thru 3246017	4
-31A	690-612	WASHER - (NAS1149F0363P) (Used on 6 seat install)	3246018 and up 3257001 and up	2
-31A	690-612	WASHER - (NAS1149F0363P) (Used on 5 seat install)	3246088 thru 3246181 3257001 thru 3257198	4
-31B	404-526	NUT - (MS21042-3)	3246001 thru 3246017	2
-32	100801-005	SUPPORT ASSY - Fire extinguisher (Against seat frame, inboard side of RH passenger seat) (Used on 6 seat installation)	3246018 and up 3257001 and up	1
-33	554-552	CLAMP - Fire extinguisher (Used on 6 seat install) (Fit fire extinguisher snugly against seat back before tightening clamps)	3246018 and up 3257001 and up	2

-Item not illustrated

When ordering, always specify Part Number, Description, and Serial Number of Aircraft

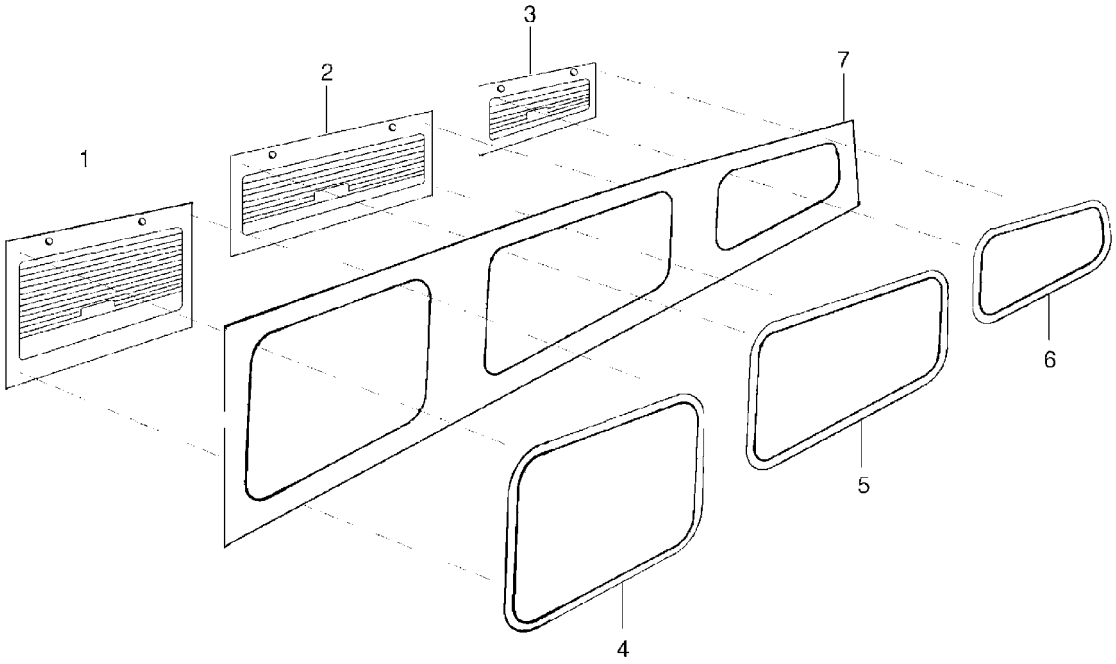

Figure 35. Window Shades and Reveals Installation

FIGURE ITEM	PART NUMBER	NOMENCLATURE	EFFECT FROM TO	UNITS PER ASSY
35	85200 (CL)	DRAWING - Interior Installation		
	85293 (K)	DRAWING - Window Shade Assy and Installation	3246001 thru 3246017	
	100836 (C)	DRAWING - Window Shade Assy and Installation	3246018 and up 3257001 and up	
1	85293-004	SHADE ASSY - Window, front, right	3246001 thru 3246017	1
1	100836-004	SHADE ASSY - Window, front, right (When ordering, specify color)	3246018 and up 3257001 and up	1
1	100836-022	SHADE ASSY - Window, front, right (Optional) (When ordering, specify color)	3246018 and up 3257001 and up	1
-1A	85293-003	SHADE ASSY - Window, front, left	3246001 thru 3246017	1
-1A	100836-003	SHADE ASSY - Window, front, left (When ordering, specify color)	3246018 and up 3257001 and up	1
-1A	100836-021	SHADE ASSY - Window, front, left (Optional) When ordering, specify color)	3246018 and up 3257001 and up	1
2	85293-006	SHADE ASSY - Window, center, right	3246001 thru 3246017	1
2	100836-006	SHADE ASSY - Window, center, right (When ordering, specify color)	3246018 and up 3257001 and up	1
2	100836-024	SHADE ASSY - Window, center, right (Optional) (When ordering, specify color)	3246018 and up 3257001 and up	1
-2A	85293-005	SHADE ASSY - Window, center, left	3246001 thru 3246017	1
-2A	100836-005	SHADE ASSY - Window, center, left (When ordering, specify color)	3246018 and up 3257001 and up	1
-2A	100836-023	SHADE ASSY - Window, center, left (Optional) (When ordering, specify color)	3246018 and up 3257001 and up	1
3	85293-008	SHADE ASSY - Window, aft, right	3246001 thru 3246017	1
3	100836-008	SHADE ASSY - Window, aft, right (When ordering, specify color)	3246018 and up 3257001 and up	1
3	100836-026	SHADE ASSY - Window, aft, right (Optional) (When ordering, specify color)	3246018 and up 3257001 and up	1
-3A	85293-007	SHADE ASSY - Window, aft, left	3246001 thru 3246017	1
-3A	100836-007	SHADE ASSY - Window, aft, left (When ordering, specify color)	3246018 and up 3257001 and up	1
-3A	100836-025	SHADE ASSY - Window, aft, left (Optional) (When ordering, specify color)	3246018 and up 3257001 and up	1
4	85210-002	REVEAL - Window, front, left and right	3246001 thru 3246017	2
4	85210-202	REVEAL - Window, front, left and right	3246018 and up 3257001 and up	2
5	85210-003	REVEAL - Window, center, right	3246001 thru 3246017	1
5	85210-203	REVEAL - Window, center, right	3246001 thru 3246017	1
-5A	85210-126	REVEAL - Window, center, left (aft cabin door)	3246001 thru 3246017	1
-5A	85210-206	REVEAL - Window, center, left (aft cabin door)	3246018 and up 3257001 and up	1
6	85210-004	REVEAL - Window, aft, right	3246001 thru 3246017	1
6	85210-204	REVEAL - Window, aft, right	3246018 and up 3257001 and up	1
-6A	85210-005	REVEAL - Window, aft, left (cargo door)	3246001 thru 3246017	1
-6A	85210-205	REVEAL - Window, aft, left (cargo door)	3246018 and up 3257001 and up	1
7	85210-012	PANEL ASSY - Side, upper, right (See Figure 34-6)	3246001 thru 3246087	RF
7	85210-301	PANEL ASSY - Side, upper, right (See Figure 34-6)	3246088 thru 3246158 3257001 thru 3257139	RF

-Item not illustrated

When ordering, always specify Part Number, Description, and Serial Number of Aircraft

FIGURE ITEM	PART NUMBER	NOMENCLATURE	EFFECT FROM TO	UNITS PER ASSY
35-				
7	101230-012	PANEL ASSY - Side, upper, right (See Figure 34-6)	3246159 and up 3257140 and up	RF
-8	419-956	SCREW - (2 each per shade assy)		12

-Item not illustrated

When ordering, always specify Part Number, Description, and Serial Number of Aircraft

THIS PAGE INTENTIONALLY LEFT BLANK

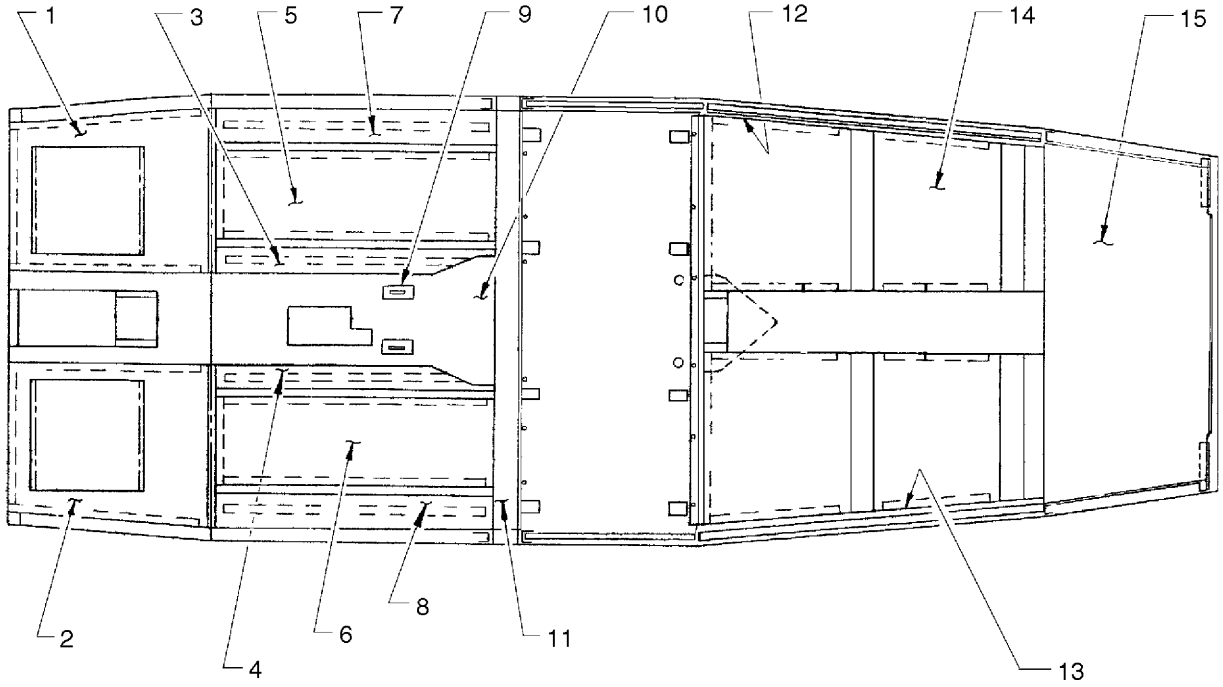

Figure 36. Carpet Installation

FIGURE ITEM	PART NUMBER	NOMENCLATURE	EFFECT FROM TO	UNITS PER ASSY
36	69845 (AH)	DRAWING - Carpet Installation		
	85200 (CL)	DRAWING - Interior Installation		
1	85210-023	CARPET ASSY - Right side		1
2	85210-022	CARPET ASSY - Left side		1
3	85210-025	CARPET ASSY - Right side		1
4	85210-024	CARPET ASSY - Left side		1
5	85210-027	CARPET ASSY - Right side		1
6	85210-026	CARPET ASSY - Left side		1
7	85210-029	CARPET ASSY - Right side		1
8	85210-028	CARPET ASSY - Left side		1
9	69636-005	COVER - Seat belt fitting		2
10	85210-030	CARPET ASSY		1
11	85210-031	CARPET ASSY		1
12	79680-003	CARPET ASSY		1
13	79680-002	CARPET ASSY		1
14	85210-054	CARPET ASSY		1
15	85210-056	CARPET ASSY		1

-Item not illustrated

When ordering, always specify Part Number, Description, and Serial Number of Aircraft

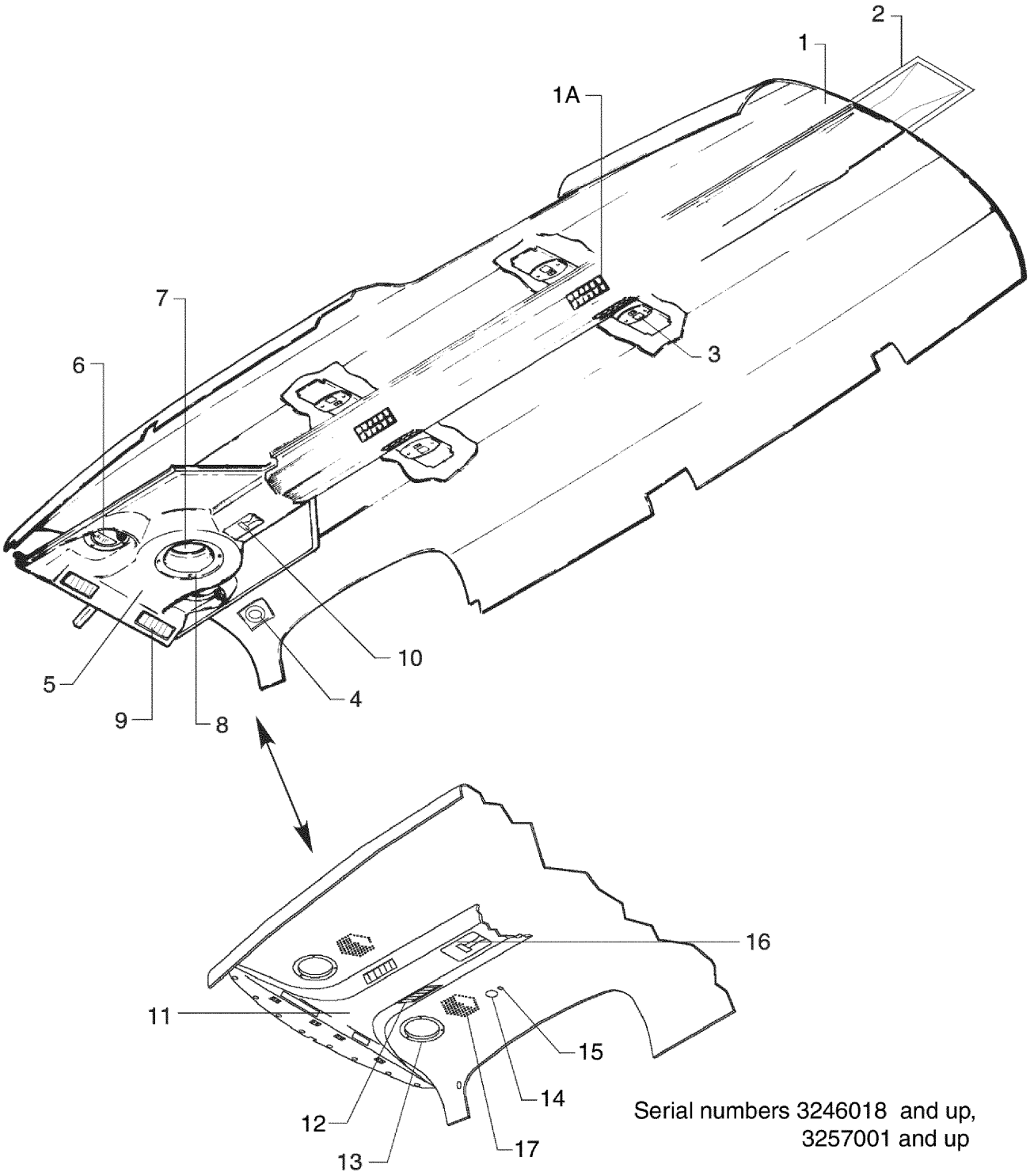

Figure 37. Headliner and Forward Fresh Air Duct Installation

FIGURE ITEM	PART NUMBER	NOMENCLATURE	EFFECT FROM TO	UNITS PER ASSY
37	85200 (CL)	DRAWING - Interior Installation		
	87348 (H)	DRAWING - Courtesy Lights Installation		
	84289 (D)	DRAWING - Speaker Installation	3246018 and up 3257001 and up	
	89402 (C)	DRAWING - Cable Installation - Fresh Air	3246018 and up 3257001 and up	
1	85210-092	PANEL ASSY - Headliner (Ducting is part of headliner panel assy)	3246001 thru 3246017	1
1	85210-182	PANEL ASSY - Headliner (Used if air conditioning NOT installed)	3246018 and up 3257001 and up	1
1	85210-177	PANEL ASSY - Headliner (Used if air conditioning is installed)	3246018 and up 3257001 and up	1
1A	473-195	. LOUVRE - (336-1HS)	3246001 thru 3246017	4
1A	473-700	. LOUVRE ASSY	3246018 and up 3257001 and up	4
2	85210-189	CLOSEOUT - Headliner	3246018 and up 3257001 and up	1
2	85210-123	CLOSEOUT - Headliner	3246001 thru 3246017	1
3	85311-002	LIGHT ASSY - Reading, 14 volt	3246001 thru 3246017	3
3	85311-004	LIGHT ASSY - Reading, 28 volt	3246018 thru 3246087	3
3	85311-005	LIGHT ASSY - Reading, 28 volt	3246088 and up 3257001 and up	3
-3A	472-034	. LAMP - 14 volt	3246001 thru 3246017	1
-3A	472-027	. LAMP - 28 volt	3246018 and up 3257001 and up	1
-3B	85310-002	. BEZEL	3246001 thru 3246087	1
-3B	85310-003	. BEZEL	3246088 and up 3257001 and up	1
-3C	558-300	. CUP/LENS ASSY - (01-0770614-00)		1
4	37871-009	LIGHT ASSY - Cabin entrance, 14 volt	3246001 thru 3246017	1
-4A	572-525	. LIGHT ASSY - 14 volt (A325FL-14)	3246001 thru 3246017	1
-4B	472-034	. . LAMP - 14 volt	3246001 thru 3246017	1
5	78731-016	OVERHEAD ASSY - Forward, fresh air vent	3246001 thru 3246017	1
-5A	85210-019	. PANEL ASSY - Cockpit headliner	3246001 thru 3246017	1
6	87396-002	. LIGHT ASSY - Cockpit overhead, 14 volt	3246001 thru 3246017	1
-6A	572-582	. . LIGHT - 14 volt (A300-W-14)	3246001 thru 3246017	2
-6B	95228-000	. . POTENTIOMETER - 14 volt light (456-732)	3246001 thru 3246017	2
-6C	571-136	. KNOB	3246001 thru 3246017	2
7	99820-003	. SPEAKER	3246001 thru 3246017	1
-7A	68441-000	. BAFFLE - Speaker	3246001 thru 3246017	1
8	68440-000	. RING - Speaker	3246001 thru 3246017	1
-8A	414-783	. SCREW - (MS24693-C51)	3246001 thru 3246017	4
9	473-195	. LOUVRE - (336-1HS)	3246001 thru 3246017	2
-9A	461-391	. FRAME - Louvre	3246001 thru 3246017	2
-9B	406-424	. NUT - (C2773-040-4)	3246001 thru 3246017	8
10	653-640	CABLE ASSY - Cabin air	3246001 thru 3246017	1
-10A	69669-077	PLACARD - Cabin air, pull off (See figure 84)	3246001 thru 3246017	1
11	83396-004	OVERHEAD ASSY - Forward, fresh air vent (Used if air conditioning NOT installed)	3246018 thru 3246039	1
11	83396-005	OVERHEAD ASSY - Forward, fresh air vent (Used if air conditioning is installed)	3246018 thru 3246039	1

-Item not illustrated

When ordering, always specify Part Number, Description, and Serial Number of Aircraft

FIGURE ITEM	PART NUMBER	NOMENCLATURE	EFFECT FROM TO	UNITS PER ASSY
37-				
11	83396-008	OVERHEAD ASSY - Forward, fresh air vent (Used if air conditioning NOT installed)	3246040 and up 3257001 and up	1
11	83396-009	OVERHEAD ASSY - Forward, fresh air vent (Used if air conditioning is installed)	3246040 and up 3257001 and up	1
-11A	85210-170	. PANEL ASSY - Cockpit headliner	3246018 thru 3246039	1
-11A	85210-174	. PANEL ASSY - Cockpit headliner	3246018 thru 3246039	1
-11A	85210-248	. PANEL ASSY - Cockpit headliner	3246040 and up 3257001 and up	1
-11A	85210-250	. PANEL ASSY - Cockpit headliner	3246040 and up 3257001 and up	1
12	473-700	. LOUVRE ASSY	3246018 and up 3257001 and up	2
13	95229-006	. LIGHT ASSY - Cockpit, overhead, 28 volt	3246018 and up 3257001 and up	2
-13A	84264-005	. . MAP LIGHT ASSY	3246018 and up 3257001 and up	1
-13B	572-610	. . . LIGHT - 28 volt	3246018 and up 3257001 and up	1
-13C	95228-003	. . POTENTIOMETER - 28 volt light	3246018 and up 3257001 and up	1
-13D	571-136	. KNOB	3246018 and up 3257001 and up	1
14	89875-005	. LIGHT ASSY - Cabin entrance, 28 volt	3246018 and up 3257001 and up	1
-14A	572-662	. . LIGHT ASSY - 28 volt	3246018 and up 3257001 and up	1
-14B	472-027	. . . LAMP - 28 volt	3246018 and up 3257001 and up	1
15	89908-003	. SWITCH ASSY - Cabin entrance light	3246018 and up 3257001 and up	1
-15A	688-374	. . SWITCH - (62116919)	3246018 and up 3257001 and up	1
-15B	582-692	. . PLUG - (1-480319-0)	3246018 and up 3257001 and up	1
16	653-643	CABLE ASSY - Cabin air	3246018 and up 3257001 and up	1
17	85430-002	SPEAKER ASSY	3246018 and up 3257001 and up	2
-17A	486-230	SCREW - (MS24621-29)	3246018 and up 3257001 and up	4
-17B	406-447	CLIP NUT - (NAS395-14-3)	3246018 and up 3257001 and up	4

-Item not illustrated

When ordering, always specify Part Number, Description, and Serial Number of Aircraft

THIS PAGE INTENTIONALLY LEFT BLANK

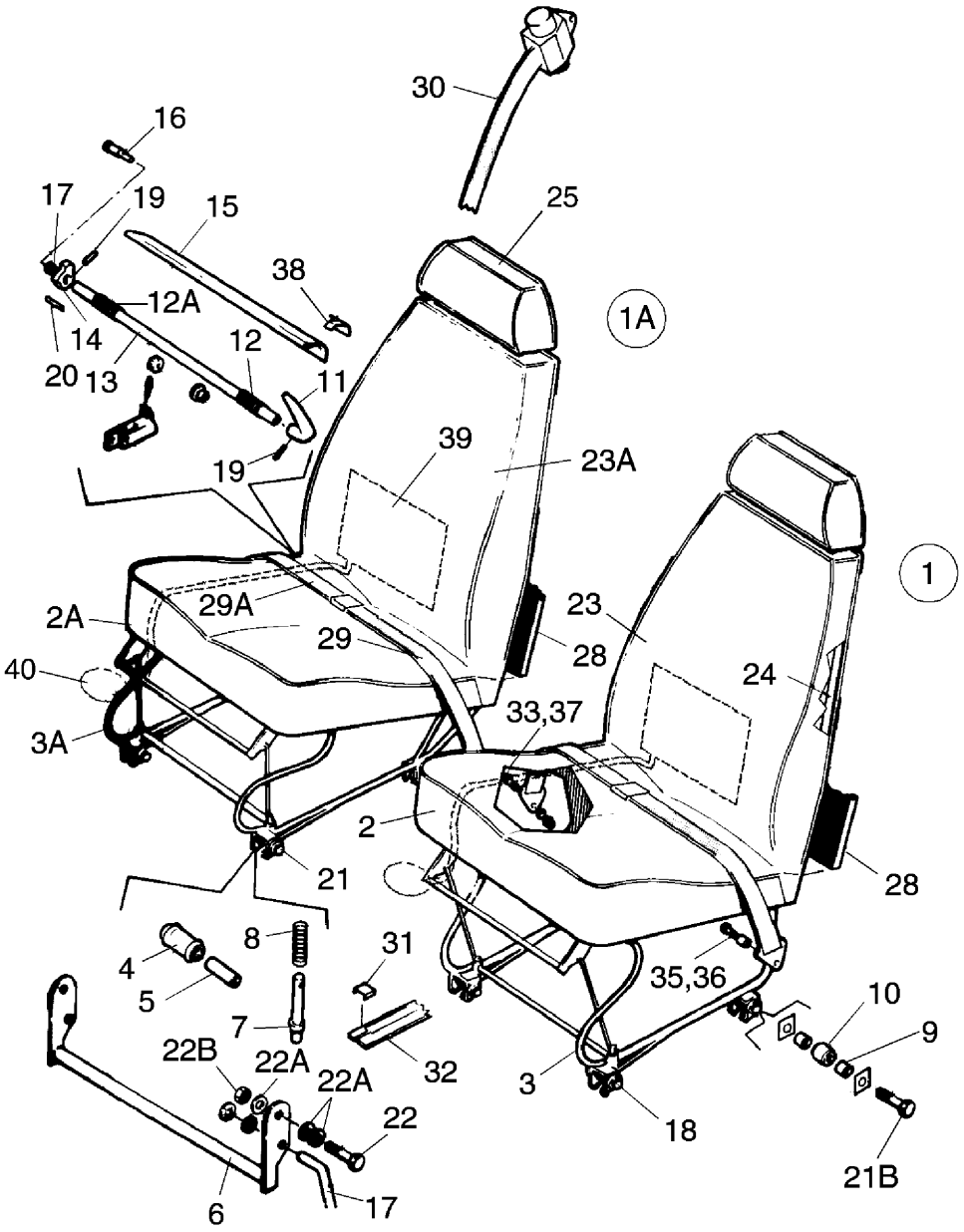

Figure 38. Forward Seats Installation

FIGURE ITEM	PART NUMBER	NOMENCLATURE	EFFECT FROM TO	UNITS PER ASSY
38	78087 (AY)	DRAWING - Seats Installation		
	78354 (AD)	DRAWING - Shoulder Harness Installation		
	02585 (F)	DRAWING - Lumbar Installation - Crew Seats		
1	89026-004	SEAT ASSY - Pilot adjustable	3246001 thru 3246017	1
		(When ordering, specify color and material)		
1	89026-012	SEAT ASSY - Pilot adjustable	3246018 and up	1
		(When ordering, specify color and material)	3257001 and up	
1A	89026-005	SEAT ASSY - Copilot adjustable	3246001 thru 3246017	1
		(When ordering, specify color and material)		
1A	89026-013	SEAT ASSY - Copilot adjustable	3246018 and up	1
		(When ordering, specify color and material)	3257001 and up	
2	89026-008	. BOTTOM ASSY - Pilot seat		1
2A	89026-009	. BOTTOM ASSY - Copilot seat		1
3	79540-002	. . FRAME ASSY - Pilot seat, bottom		1
3A	79540-003	. . FRAME ASSY - Copilot seat, bottom		1
4	87332-002	. . . ROLLER - Seat track		2
5	95061-106	. . . BEARING - Seat roller		2
6	79207-000	. . . HANDLE ASSY - Seat release		1
7	76175-000	. . . PLUNGER - Seat		2
-7A	424-139	. . . PIN - (MS20392-1C13)		2
-7B	690-668	. . . WASHER - (NAS1149FN432P)		2
-7C	424-051	. . . COTTER PIN - (MS24665-132)		2
8	587-299	. . . SPRING - Seat plunger (LC 038F-6SS)		2
9	95061-161	. . . SPACER - Seat roller		4
10	452-386	. . . BEARING - (NAS506-4)		2
11	79442-000	. . . HANDLE - Seat recliner		1
12	19336-000	. . . SPRING - Seat back adjustment, inboard		1
12A	19336-001	. . . SPRING - Seat back adjustment, inboard		1
13	79230-000	. . . TUBE - Reclining mechanism		1
14	19365-002	. . . CAM - Reclining seat		2
15	76176-000	. . . COVER - Reclining seat		1
		(When ordering, specify color and material)		
-15A	419-474	. . . SCREW - (MS51861-12)		4
16	79229-000	. . . BEARING SHAFT - Seat release, right		1
17	79235-000	. . . BUSHING - Seat back release, right		1
18	62833-078	. . . WASHER - Seat attachment		8
19	480-701	. . . PIN - Roll (59 028 128 0625)		3
20	480-732	. . . PIN - Roll (59 040 187 0937)		2
21	401-318	. . . BOLT - (AN4-20A)		2
-21A	404-530	. . . NUT - (MS21042-4)		2
21B	401-318	. . . BOLT - (AN4-20A)		2
-21C	477-708	. . . NUT - (26C-048)		2
22	400-002	. . . BOLT - (AN4-5A)		2
22A	494-040	. . . WASHER - Nylon		6
22B	404-836	. . . NUT - (MS20364-428C)		2
23	89023-010	. BACK ASSY - Pilot seat	3246001 thru 3246017	1
23	85514-004	. BACK ASSY - Pilot seat	3246018 and up	1
			3257001 and up	
23A	89023-011	. BACK ASSY - Copilot seat	3246001 thru 3246017	1
23A	85514-005	. BACK ASSY - Copilot seat	3246018 and up	1
			3257001 and up	
24	79555-000	. . FRAME ASSY - Pilot seat, back	3246001 thru 3246017	1
24	79555-012	. . FRAME ASSY - Pilot seat, back	3246018 and up	1
			3257001 and up	

-Item not illustrated

When ordering, always specify Part Number, Description, and Serial Number of Aircraft

FIGURE ITEM	PART NUMBER	NOMENCLATURE	EFFECT FROM TO	UNITS PER ASSY
38-				
-24A	79555-014	. . FRAME ASSY - Copilot seat, back	3246001 thru 3246017	1
-24A	79555-013	. . FRAME ASSY - Copilot seat, back	3246018 and up 3257001 and up	1
25	89028-002	. HEADREST ASSY		2
28	89023-013	. . COVER ASSY - Pilot and copilot seats, back (When ordering, specify color and material)		1
29	564-862	BELT ASSY - Lap, buckle end (Refer to Piper Service Bulletin #990 - latest revision)	3246001 thru 3246087	2
29	564-878	BELT ASSY - Lap, buckle end	3246088 thru 3246158 3257001 thru 3257139	2
29A	564-867	BELT ASSY - Lap, adjustable end (Refer to Piper Service Bulletin #990 - latest revision)	3246001 thru 3246087	2
29A	564-876	BELT ASSY - Lap, adjustable end	3246088 thru 3246158 3257001 thru 3257139	2
-29B	104211-004	BELT ASSY - Left, lap and shoulder harness assy (564-886)	3246159 and up 3257140 and up	2
-29B	104211-005	BELT ASSY - Right, lap and shoulder harness assy (564-887)	3246159 and up 3257140 and up	2
30	452-692	BELT ASSY - Shoulder (with inertia reel)	3246001 thru 3246158 3257001 thru 3257139	2
31	62654-000	STOP - Seat track		8
32	62557-004	TRACK - Front seat (See figure 11)		RF
33	63900-145	BUSHING - Seat belt attachment (Inbd lap belt) (Refer to Figure 11 for seat belt floor attachment installation)		2
-33A	101178-004	BUSHING - Seat belt attachment (Inbd lap belt, one on either side of lap belt attachment)(Refer to Figure 11 for seat belt floor attachment installation)	3246159 and up 3257140 and up	4
35	63900-145	BUSHING - Seat belt attachment (Outbd lap belt) (Refer to Figure 11 for seat belt floor attachment installation)		2
36	400-441	BOLT - (AN3-7A)		2
-36A	690-612	WASHER - (NAS1149F0363P)		2
-36B	404-526	NUT - (MS21042-3)		2
37	400-441	BOLT - (AN3-7A)		2
-37A	690-612	WASHER - (NAS1149FN363P)		2
-37B	404-526	NUT - (MS21042-3)		2
38	76176-002	CLIP - Seat stop (Component of Club Seats Installation drawings - see figure 41)		2
39	02585-004	LUMBAR ASSY - Pilot seat		1
39	02585-005	LUMBAR ASSY - Copilot seat		1
-39A	02585-006	. PAD		1
-39B	686-207	. BLADDER - (BL-900-068-00)		1
40	686-208	PUMP BULB - (ILSHPB)		1
-40A	592-683	VALVE - (ILSPBV)		1

-Item not illustrated

When ordering, always specify Part Number, Description, and Serial Number of Aircraft

THIS PAGE INTENTIONALLY LEFT BLANK

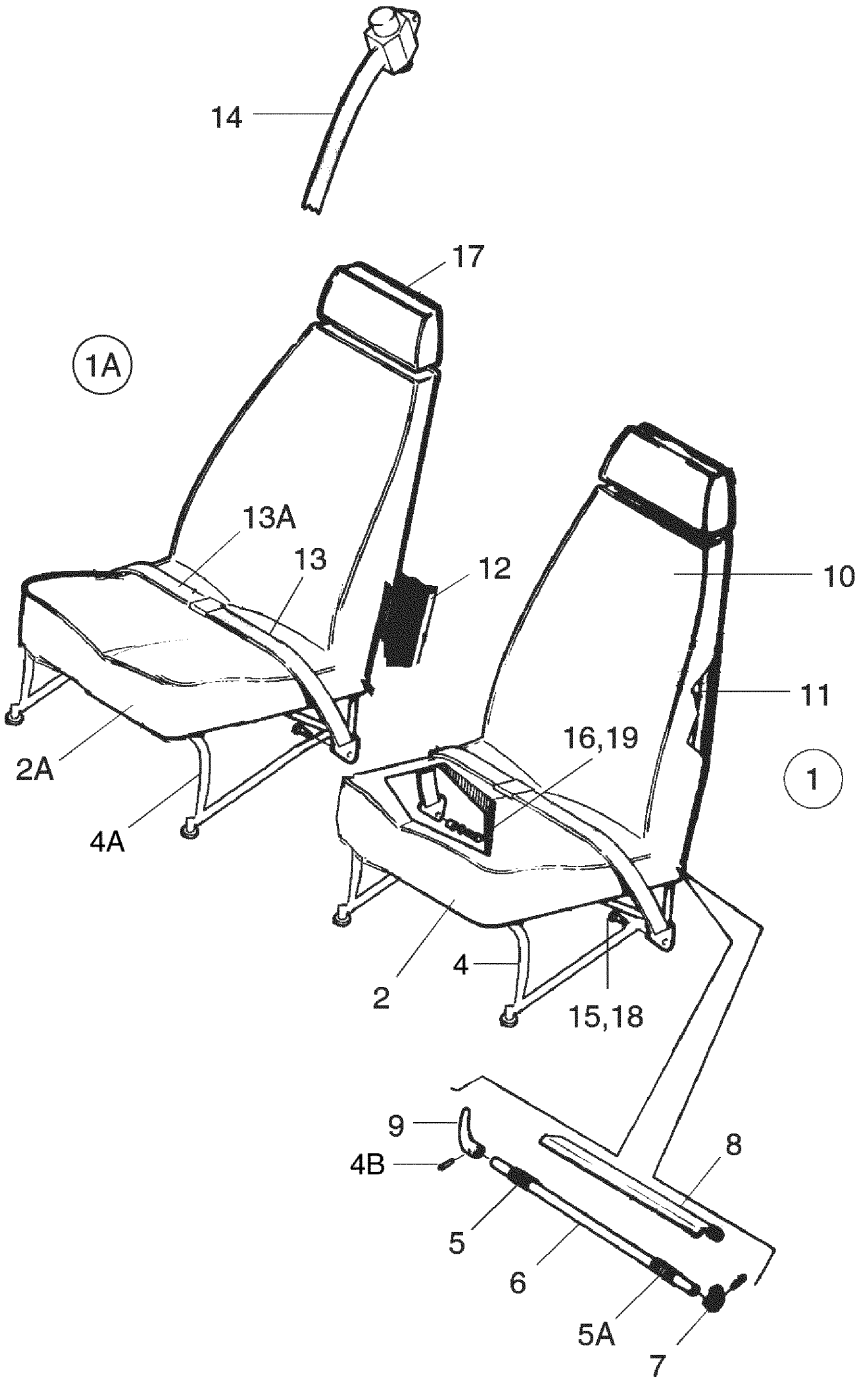

Figure 39. Rear Seats Installation

FIGURE ITEM	PART NUMBER	NOMENCLATURE	EFFECT FROM TO	UNITS PER ASSY
39	78087 (AY)	DRAWING - Seats Installation		
	78354 (AD)	DRAWING - Shoulder Harness Installation		
1	89046-002	SEAT ASSY - Rear, left		1
		(When ordering, specify color and material)		
1A	89046-004	SEAT ASSY - Rear, right		1
		(When ordering, specify color and material)		
2	89046-005	. BOTTOM ASSY - Left rear seat		1
2A	89046-007	. BOTTOM ASSY - Right rear seat		1
-3	455-742	. . CUSHION - Rear seat, bottom		2
-3A	101317-002	. . ARMREST ASSY - Rear seat, right (optional)		1
-3B	79759-028	. . . BUSHING		1
-3C	400-928	. . . BOLT - (AN24-38A)(through aft armrest strut)		1
-3D	400-932	. . . BOLT - (AN24-46A)(through fwd armrest strut)		1
-3E	404-530	. . . NUT - (MS21042-4)		2
4	79633-002	. . FRAME ASSY - Rear seat, bottom, left		1
4A	79633-015	. . FRAME ASSY with armrest- Rear seat, bottom, right		1
4B	480-701	. . . PIN - Roll (59 028 128 0625)		3
-4C	424-060	. . . COTTER PIN - (MS24665-285)		2
5	19336-000	. . . SPRING - Seat back adjustment, inboard		1
5A	19336-001	. . . SPRING - Seat back adjustment, outboard		1
6	19392-015	. . . TUBE - Reclining mechanism		1
7	19365-002	. . . CAM - Reclining seat		2
8	76176-000	. . . COVER - Reclining seat		1
		(When ordering, specify color and material)		
-8A	419-474	. . . SCREW - (MS51861-12)		4
9	79442-000	. . . HANDLE - Seat recliner		1
-9A	480-732	. . . PIN - Roll (59 040 187 0937)		2
10	89023-010	. BACK ASSY - Left and right rear seats		2
11	79555-000	. . FRAME ASSY - Rear seat back		1
12	89023-013	. . COVER ASSY - Rear seat back		1
		(When ordering, specify color and material)		
13	564-862	BELT ASSY - Lap, buckle end	3246001 thru 3246087	2
		(Refer to Piper Service Bulletin #990 - latest revision)		
13	564-878	BELT ASSY - Lap, buckle end	3246088 thru 3246158 3257001 thru 3257139	2
13A	564-867	BELT ASSY - Lap, adjustable end	3246001 thru 3246087	2
		(Refer to Piper Service Bulletin #990 - latest revision)		
13A	564-876	BELT ASSY - Lap, adjustable end	3246088 thru 3246158 3257001 thru 3257139	2
-13B	104211-002	BELT ASSY - Left, lap and shoulder harness (564-892)	3246159 and up 3257140 and up	1
-13B	104211-003	BELT ASSY - Right, lap and shoulder harness (564-893)	3246159 and up 3257140 and up	1
14	452-679	BELT ASSY - Shoulder (with inertia reel)	3246001 thru 3246158 3257001 thru 3257139	2
15	63900-145	BUSHING - Seat belt attachment		2
		(Refer to Figure 12 for seat belt floor attachment installation)		
16	63900-147	BUSHING - Seat belt attachment		2
		(Refer to Figure 12 for seat belt floor attachment installation)		
17	89028-002	HEADREST ASSY		2
18	400-441	BOLT - (AN3-7A)		2

-Item not illustrated

When ordering, always specify Part Number, Description, and Serial Number of Aircraft

FIGURE ITEM	PART NUMBER	NOMENCLATURE	EFFECT FROM TO	UNITS PER ASSY
39-				
-18A	690-612	WASHER - (NAS1149F0363P)		2
19	400-440	BOLT - (AN3-6A)		2
-19A	690-612	WASHER - (NAS1149F0363P)		2

-Item not illustrated

When ordering, always specify Part Number, Description, and Serial Number of Aircraft

THIS PAGE INTENTIONALLY LEFT BLANK

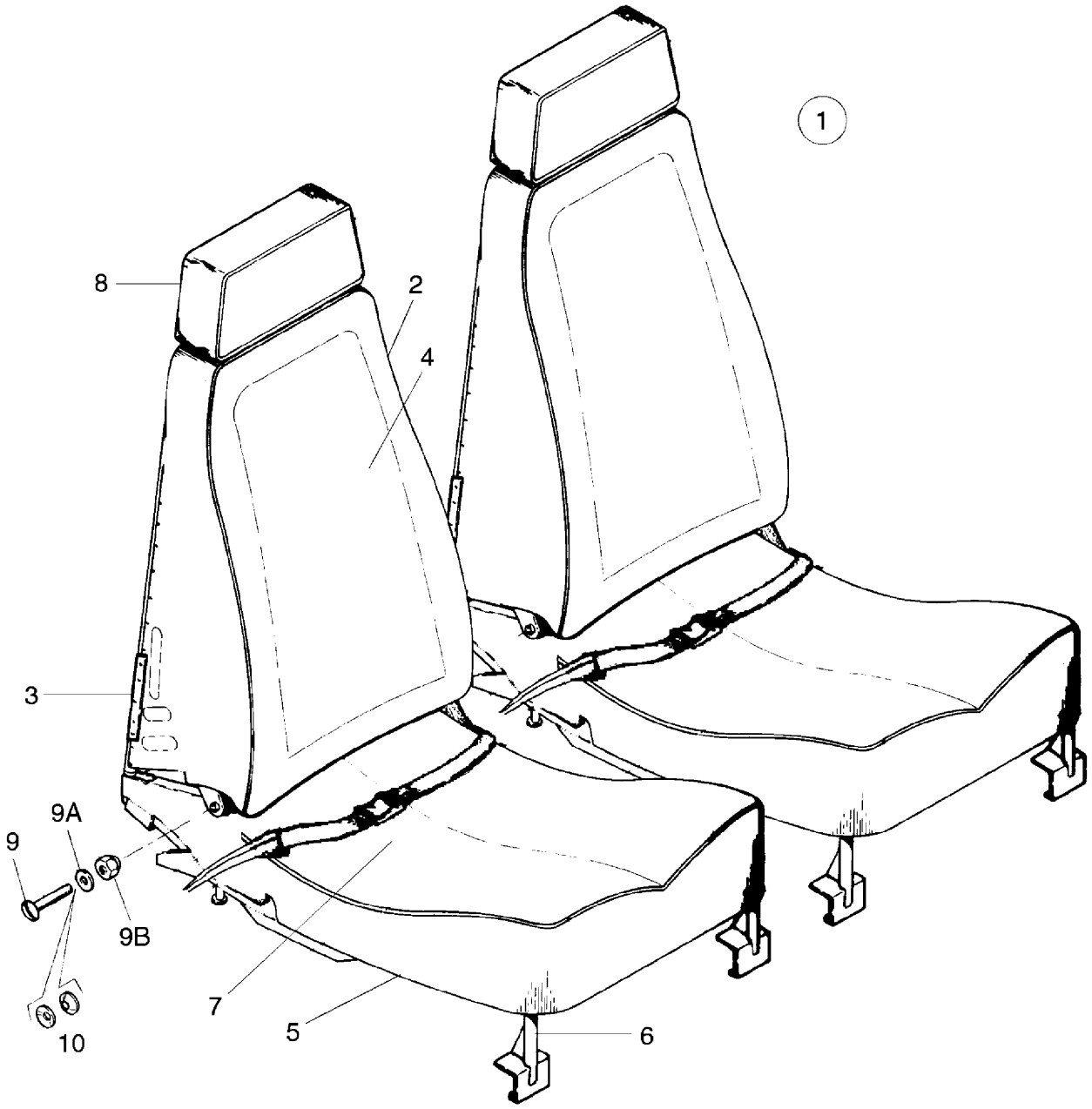

Figure 40. Aft Facing Seat Assembly - Center

FIGURE ITEM	PART NUMBER	NOMENCLATURE	EFFECT FROM TO	UNITS PER ASSY
40	89036 (F)	DRAWING - Seat Assy, Center, Club		
	37825 (BD)	DRAWING - Club Seats Installation		
	100849 (N)	DRAWING - Club Seats Installation	3246088 thru 3246158	
		(5 seat install option)	3257001 thru 3257139	
1	89036-002	SEAT ASSY - Center, aft facing		1
		(See Figure 41 for seat install)		
		(When ordering, specify color and material)		
2	89036-003	. BACK ASSY - Aft facing center seat		1
-2A	455-743	. . CUSHION - Seat back		1
3	37796-002	. . FRAME ASSY - Seat back		1
4	89036-005	. . COVER - Seat back		1
		(When ordering, specify color and material)		
5	89036-004	. BOTTOM ASSY - Aft facing center seat		1
-5A	455-741	. . CUSHION - Seat bottom		1
6	37797-002	. . FRAME ASSY - Seat bottom		1
7	89036-006	. . COVER - Seat bottom		1
		(When ordering, specify color and material)		
8	89028-002	. HEADREST ASSY - Aft facing center seat		1
-8A	603-320	. NUT - Headrest retainer (PV375015S)(Optional)		2
9	400-916	. BOLT - (AN24-26A)		2
9A	690-611	. WASHER - (NAS1149F0463P)		4
9B	477-708	. NUT - (26C-048)		2
10	408-834	. WASHER - (AM251215)		2

-Item not illustrated

When ordering, always specify Part Number, Description, and Serial Number of Aircraft

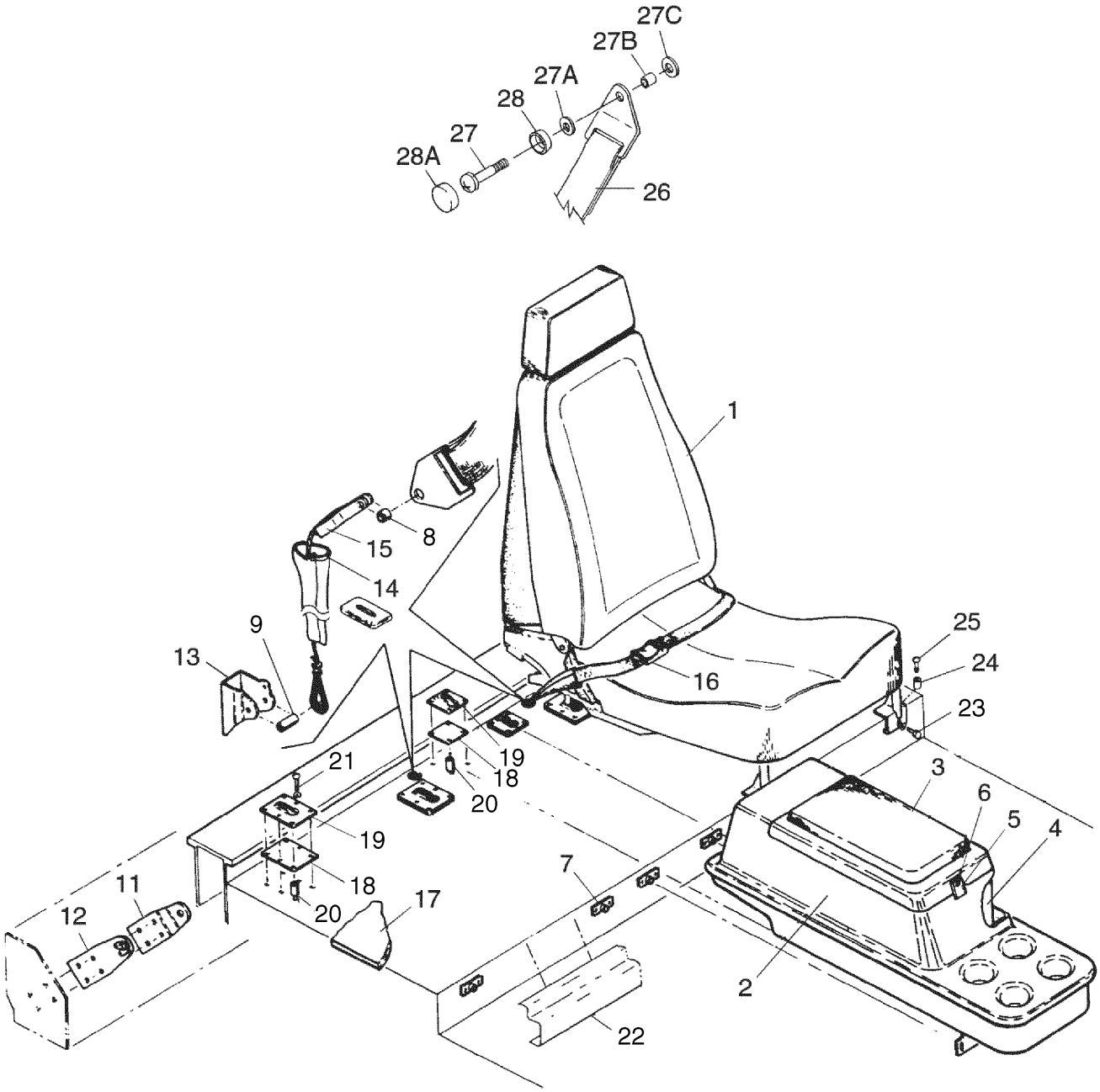

Figure 41. Club Seating Installation

FIGURE ITEM	PART NUMBER	NOMENCLATURE	EFFECT FROM TO	UNITS PER ASSY
41	37825 (BB)	DRAWING - Club Seats Installation (6 seat installation)		
	100849 (N)	DRAWING - Club Seat and Console Installation (5 seat installation option)(See figure 41A for console)	3246088 thru 3246181 3257001 thru 3257198	
1	89036-002	SEAT ASSY - Center, aft facing (See Figure 40 for component parts)(When ordering, specify color and material)		RF
2	104215-002	CONSOLE ASSY - Center refreshment, Quartz (When ordering, specify color and material) (See figure 41A for 5 seat console install)		1
2	104215-003	CONSOLE ASSY - Center refreshment, Topaz (When ordering, specify color and material) (See figure 41A for 5 seat console install)		1
2	104215-004	CONSOLE ASSY - Center refreshment, Emerald (When ordering, specify color and material) (See figure 41A for 5 seat console install)		1
2	104215-005	CONSOLE ASSY - Center refreshment, Sapphire (When ordering, specify color and material) (See figure 41A for 5 seat console install)		1
3	104215-006	. ARM PAD ASSY - Refreshment console (When ordering, specify color and material) (Used on 104215-002 console assy)		1
3	104215-007	. ARM PAD ASSY - Refreshment console (When ordering, specify color and material) (Used on 104215-003 console assy)		1
3	104215-008	. ARM PAD ASSY - Refreshment console (When ordering, specify color and material) (Used on 104215-004 console assy)		1
3	104215-009	. ARM PAD ASSY - Refreshment console (When ordering, specify color and material) (Used on 104215-005 console assy)		1
4	602-022	. ICE-COOLER		1
5	601-703	. LATCH - (07-10-201-12)		1
6	520-039	. SCREW - (MS51862-3C)		2
7	37850-002	PLATE ASSY - Seats		6
8	63900-149	BUSHING		2
9	95061-157	BUSHING		2
11	37834-002	LINK - Seat belt attachment	3246001 thru 3246158 3257001 thru 3257139	2
11	87297-003	LINK - Seat belt attachment	3246159 and up 3257140 and up	2
12	37835-002	LINK - Seat belt attachment	3246001 thru 3246158 3257001 thru 3257139	2
12	87297-002	LINK - Seat belt attachment	3246159 and up 3257140 and up	2
-12A	415-310	SCREW - (MS27039-0810) (Through seat belt attachment links - LH and RH)		8
-12B	690-616	WASHER - (NAS1149FN832P)		8
-12C	401-310	BOLT - (AN4-10A)(Through seat belt attachment links and adjustable lap belt - LH and RH)		2
-12D	690-611	WASHER - (NAS1149F0463P)		2
-12E	63900-146	SPACER		2
13	37839-002	FITTING - Seat belt attachment		2

-Item not illustrated

When ordering, always specify Part Number, Description, and Serial Number of Aircraft

FIGURE ITEM	PART NUMBER	NOMENCLATURE	EFFECT FROM TO	UNITS PER ASSY
41-				
14	68022-014	BOOT - Seat belt attachment, black		2
15	96908-000	CABLE ASSY - Seat belt		2
16	564-868	BELT ASSY - Lap, buckle end, center aft facing seats	3246001 thru 3246087	2
16	564-879	BELT ASSY - Lap, buckle end, center aft facing seats	3246088 thru 3246158 3257001 thru 3257139	2
-16A	564-867	BELT ASSY - Lap, adjustable end, center aft facing seats	3246001 thru 3246087	2
-16A	564-876	BELT ASSY - Lap, adjustable end, center aft facing seats	3246088 thru 3246158 3257001 thru 3257139	2
-16B	564-889	BELT ASSY - Lap and shoulder harness (LH), center aft facing seats (104211-006)	3246159 and up 3257140 and up	1
-16B	564-888	BELT ASSY - Lap and shoulder harness (RH), center aft facing seats (104211-007)	3246159 and up 3257140 and up	1
17	37829-007	FLOOR ASSY - Center (Used when console installed)		1
17	37829-010	FLOOR ASSY - Center (Used when no console installed)	3246001 thru 3246087 3246159 and up 3257140 and up	1
18	99140-000	. PLATE - Seat attachment		6
19	99141-003	. PLATE - Seat attachment		6
20	95061-009	. SPACER		36
21	415-540	. SCREW - (MS35206-250)		36
-21A	690-616	. WASHER - (NAS1149FN832P)		36
-21B	404-529	. NUT - Self locking (MS21042-08)		36
22	68613-000	STRIP - Trim	3246001 thru 3246087	1
22	68613-002	STRIP - Trim	3246088 and up 3257001 and up	1
22	68613-003	STRIP - Trim (Optional) (Replaces 68613-002 if no console installed)	3246159 and up 3257140 and up	1
23	400-009	BOLT - (AN4-14A)		6
-23A	690-613	WASHER - (NAS1149F0432P)		6
24	95061-008	SPACER		6
25	414-772	SCREW - (MS24693-S55)		6
-25A	494-101	WASHER	3246001 thru 3246087	6
-25A	598-395	WASHER - (Stainless steel)	3246088 and up 3257001 and up	6
26	564-860	BELT ASSY - Shoulder, center aft facing seats (fixed)	3246001 thru 3246087	2
26	551-424	BELT ASSY - Shoulder, center aft facing seats (fixed)	3246088 thru 3246158 3257001 thru 3257139	2
27	415-372	SCREW - Shoulder harness, left (MS27039-4-15)		1
27	415-370	SCREW - Shoulder harness, right (MS27039-4-13)		1
27A	690-613	WASHER - (NAS1149F0432P)(Left and right)		2
27B	63900-146	SPACER - Shoulder harness, left		1
27B	63900-007	SPACER - Shoulder harness, right		1
27C	690-629	WASHER - (NAS1149F0663P)(Left and right)		2
28	452-104	BASE - Screw cover (APP0SB250P)		2
28A	655-100	COVER - Screw (APP0SC25001M)		2

-Item not illustrated

When ordering, always specify Part Number, Description, and Serial Number of Aircraft

THIS PAGE INTENTIONALLY LEFT BLANK

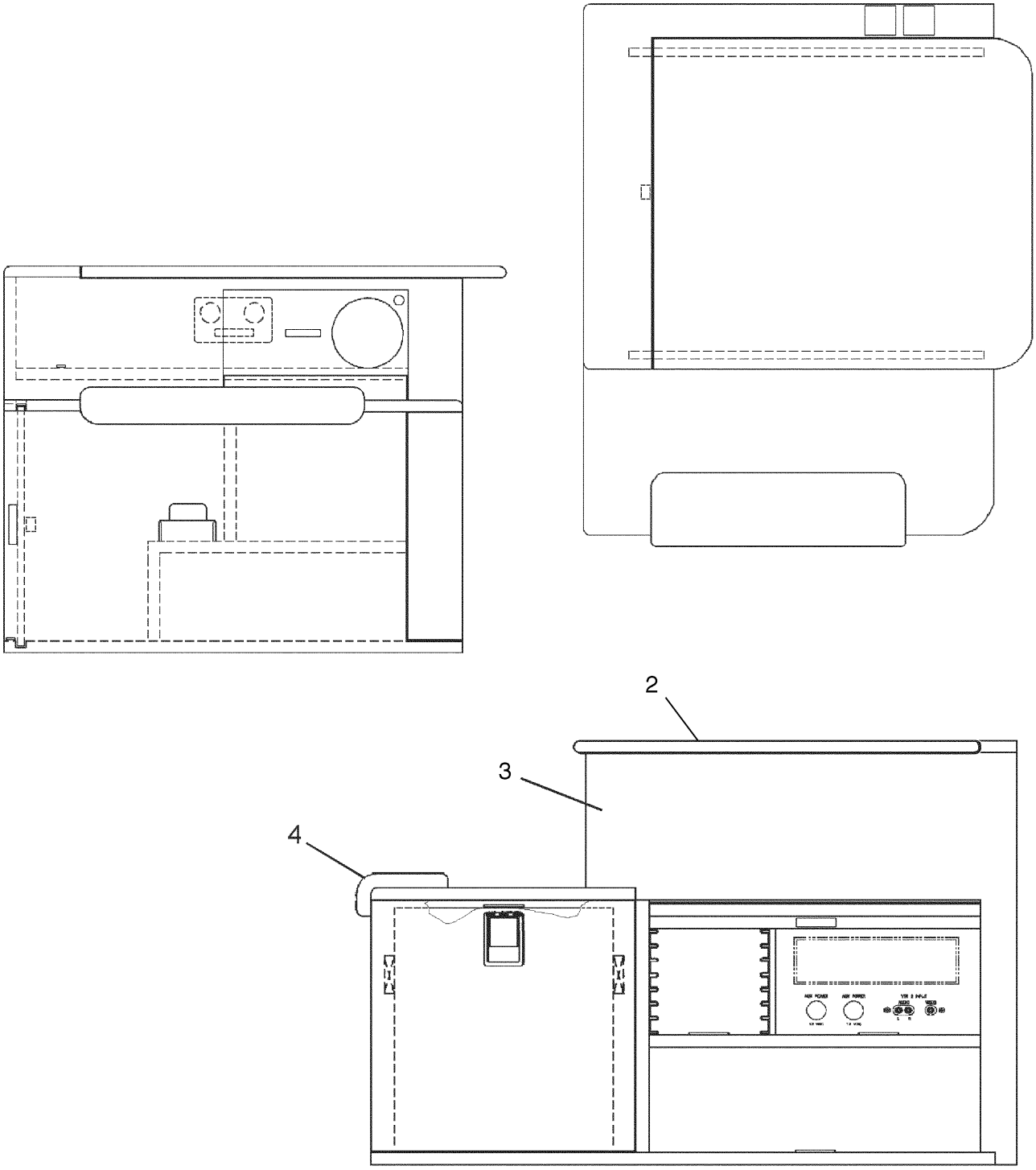

Figure 41A. Entertainment Console (Serial numbers 3246088 and up; 3257001 and up)

FIGURE ITEM	PART NUMBER	NOMENCLATURE	EFFECT FROM TO	UNITS PER ASSY
41A	100849 (N)	DRAWING - Club Seat and Console Installation (5 seat installation option)	3246088 thru 3246181 3257001 thru 3257198	
-1	100849-004	CONSOLE ASSY		1
2	602-014	. CONSOLE TOP - Entertainment, emerald (P-0369-005E)	3246088 thru 3246181 3257001 thru 3257198	1
2	602-015	. CONSOLE TOP - Entertainment, quartz (P-0369-005Q)	3246088 thru 3246181 3257001 thru 3257198	1
2	602-016	. CONSOLE TOP - Entertainment, sapphire (P-0369-005S)	3246088 thru 3246181 3257001 thru 3257198	1
2	602-017	. CONSOLE TOP - Entertainment, topaz (P-0369-005T)	3246088 thru 3246181 3257001 thru 3257198	1
3	602-005	. CONSOLE	3246088 thru 3246181 3257001 thru 3257198	1
4	85210-259	. ARMREST ASSY (When ordering, specify color and material)	3246088 thru 3246181 3257001 thru 3257198	1
-5	415-520	. SCREW - (MS35206-230) (Attaches armrest to console)	3246088 thru 3246181 3257001 thru 3257198	2
-6	690-640	. WASHER - (NAS1149FN632P)	3246088 thru 3246181 3257001 thru 3257198	2

-Item not illustrated

When ordering, always specify Part Number, Description, and Serial Number of Aircraft

GRIDS 1G22 THRU 1H2
INTENTIONALLY BLANK

SECTION VI
INSTRUMENTS GROUP

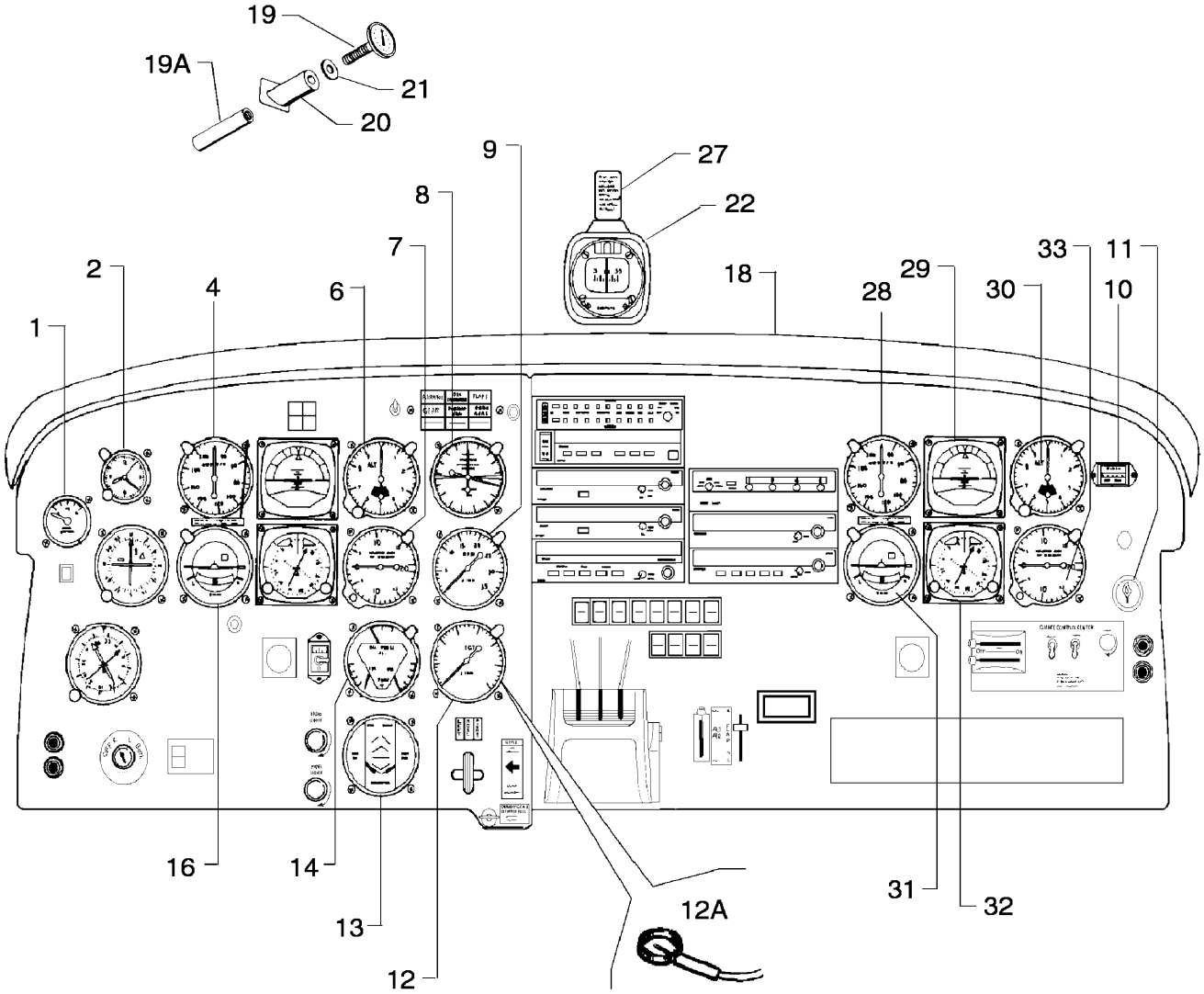

Figure 42. Instrument Panel Installation
(Serial numbers 3246001 thru 3246017)

FIGURE ITEM	PART NUMBER	NOMENCLATURE	EFFECT FROM TO	UNITS PER ASSY
42	85343 (G)	DRAWING - Instruments Installation, Engine		
	38453 (AC)	DRAWING - Instruments Installation, Flight		
	87240 (N)	DRAWING - OAT Gauge Installation		
	85569 (J)	DRAWING - Co-Pilot's Instruments Option		
	87713 (M)	DRAWING - Glareshield Installation		
	85295 (F)	DRAWING - Electrical Installation		
1	559-537	INSTRUMENT - Vacuum gauge (99480-003)		1
-1A	514-748	SCREW		4
2	548-868	INSTRUMENT - Clock (87347-002)		1
-3	DELETED			
4	599-542	INSTRUMENT - Airspeed		1
-4A	514-751	SCREW		AR
-5	DELETED			
6	548-330	INSTRUMENT - Altimeter		1
-6A	514-751	SCREW		AR
7	550-556	INSTRUMENT - Rate of climb (99010-005)		1
-7A	514-751	SCREW		AR
8	548-343	INSTRUMENT - Manifold pressure and fuel flow		1
-8A	514-751	SCREW		4
9	599-282	INSTRUMENT - Tachometer		1
-9A	514-751	SCREW		4
10	51006-000	INSTRUMENT - Engine hour meter		1
-10A	514-748	SCREW		2
11	472-969	LIGHTER - Cigar (CAS208634)		1
12	599-543	INSTRUMENT - Exhaust gas temperature		1
12A	481-388	PROBE - Exhaust gas temperature		1
-12B	514-752	SCREW		4
-12C	477-725	NUT - (NAS487-17)		1
13	599-535	INSTRUMENT - Fuel quantity		1
-13A	514-751	SCREW		4
14	599-534	INSTRUMENT - Engine gauge (oil temperature, oil pressure, cylinder head temperature)		1
-14A	514-751	SCREW		4
-15	DELETED			
16	95219-000	INSTRUMENT - Turn indicator (pilot)		1
-16A	514-751	SCREW		AR
-17	DELETED			
18	87713-025	GLARESHIELD ASSY		1
19	87702-006	INSTRUMENT - OAT gauge		1
19A	87240-006	SHIM - OAT gauge		1
-19B	565-375	HOUSING - (1-480351-0)		1
-19C	480-656	TERMINAL		1
20	83932-007	BRACKET ASSY - OAT gauge		1
21	690-628	WASHER - (NAS1149F0563P)		1
22	67462-006	INSTRUMENT - Compass		1
-23	79600-000	HOLDER - Compass		1
-24	486-284	SCREW - (4157)		1
-25	455-154	CONNECTOR		2
-26	418-704	SCREW		3
27	35669-165	PLACARD - Compass (See Figure 81-19)		RF
28	599-542	INSTRUMENT - Airspeed		1
-28A	514-751	SCREW		AR
29	599-564	INSTRUMENT - Attitude (RCA26AK-4)		1

-Item not illustrated

When ordering, always specify Part Number, Description, and Serial Number of Aircraft

FIGURE ITEM	PART NUMBER	NOMENCLATURE	EFFECT FROM TO	UNITS PER ASSY
42-				
-29A	514-748	SCREW		AR
30	599-549	INSTRUMENT - Altimeter		1
-30A	514-751	SCREW		AR
31	548-190	INSTRUMENT - Turn and bank (co-pilot)		1
-31A	514-751	SCREW		AR
32	548-435	INSTRUMENT - Directional gyro		1
-32A	514-748	SCREW		AR
33	99010-005	INSTRUMENT - Rate of climb		1
-33A	514-751	SCREW		AR

-Item not illustrated

When ordering, always specify Part Number, Description, and Serial Number of Aircraft

THIS PAGE INTENTIONALLY LEFT BLANK

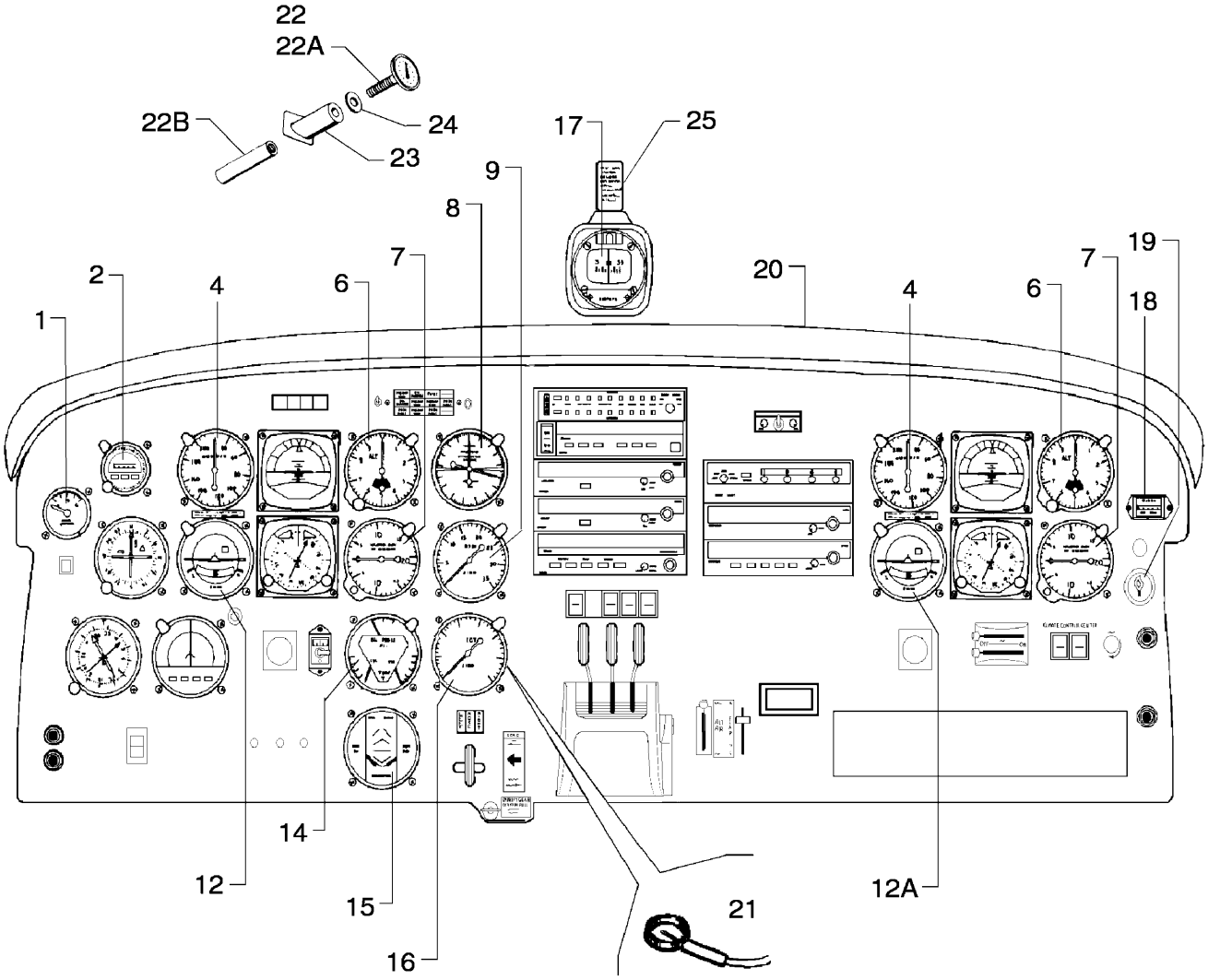

Figure 42A. Instrument Panel Installation
(Serial numbers 3246018 thru 3246087)

FIGURE ITEM	PART NUMBER	NOMENCLATURE	EFFECT FROM TO	UNITS PER ASSY
42A	85343 (G)	DRAWING - Instruments Installation, Engine		
	38453 (AC)	DRAWING - Instruments Installation, Flight		
	87240 (N)	DRAWING - OAT Gauge Installation		
	85569 (J)	DRAWING - Co-Pilot's Instruments Option		
	85196 (AZ)	DRAWING - Placard Installation		
	87713 (M)	DRAWING - Glareshield Installation		
	85455 (G)	DRAWING - Electrical Installation		
1	599-537	INSTRUMENT - Vacuum gauge (99480-003)		1
-1A	515-709	SCREW		4
2	600-103	INSTRUMENT - Clock (87347-005)		1
-3	DELETED			
4	602-200	INSTRUMENT - Airspeed		2
-4A	520-009	SCREW		AR
-5	DELETED			
6	599-549	INSTRUMENT - Altimeter		2
-6A	520-009	SCREW		AR
7	550-556	INSTRUMENT - Rate of climb (99010-005)		2
-7A	520-009	SCREW		AR
8	548-343	INSTRUMENT - Manifold pressure and fuel flow		1
-8A	520-009	SCREW		4
9	599-282	INSTRUMENT - Tachometer		1
-9A	515-715	SCREW		4
-10	DELETED			
-11	DELETED			
12	95219-000	INSTRUMENT - Turn indicator (pilot)		1
12A	548-190	INSTRUMENT - Turn indicator (co-pilot)		1
-12B	520-009	SCREW - (Pilot and co-pilot)		AR
-13	DELETED			
14	599-539	INSTRUMENT - Engine gauge (oil temperature, oil pressure, cylinder head temperature)		1
-14A	520-009	SCREW		4
15	599-563	INSTRUMENT - Fuel quantity		1
-15A	520-009	SCREW		4
16	599-543	INSTRUMENT - Exhaust gas temperature		1
-16A	520-010	SCREW		4
-16B	603-300	NUT - Mounting (MS33737)		1
17	548-082	INSTRUMENT - Compass		1
-17A	79600-000	HOLDER - Compass		1
-17B	486-284	SCREW - (4157)		1
-17C	455-154	CONNECTOR		2
-17D	418-704	SCREW		3
18	51006-000	INSTRUMENT - Engine hour meter		1
-18A	514-748	SCREW - (MS24693-S28)		2
19	559-030	LIGHTER - Cigar with knob (208083)		1
-19A	455-035	CLAMP SHELL - Lighter		1
-19B	494-411	WELL - Cigar lighter		1
20	87713-025	GLARESHIELD ASSY		1
21	481-388	PROBE - Exhaust gas temperature		1
22	87702-007	INSTRUMENT - OAT gauge		1
22A	87702-005	INSTRUMENT - OAT gauge (alternate)		1
22B	87240-006	SHIM - OAT gauge		1
-22C	404-323	NUT - OAT gauge (AN316)		1
-22D	565-375	HOUSING - (1-480351-0)		1

-Item not illustrated

When ordering, always specify Part Number, Description, and Serial Number of Aircraft

FIGURE ITEM	PART NUMBER	NOMENCLATURE	EFFECT FROM TO	UNITS PER ASSY
42A-				
-22E	480-656	TERMINAL PIN		1
23	83932-007	BRACKET ASSY - OAT gauge		1
24	690-628	WASHER - (NAS1149F0563P)		1
25	87369-027	PLACARD - Compass (See Figure 81-19)		RF

-Item not illustrated

When ordering, always specify Part Number, Description, and Serial Number of Aircraft

THIS PAGE INTENTIONALLY LEFT BLANK

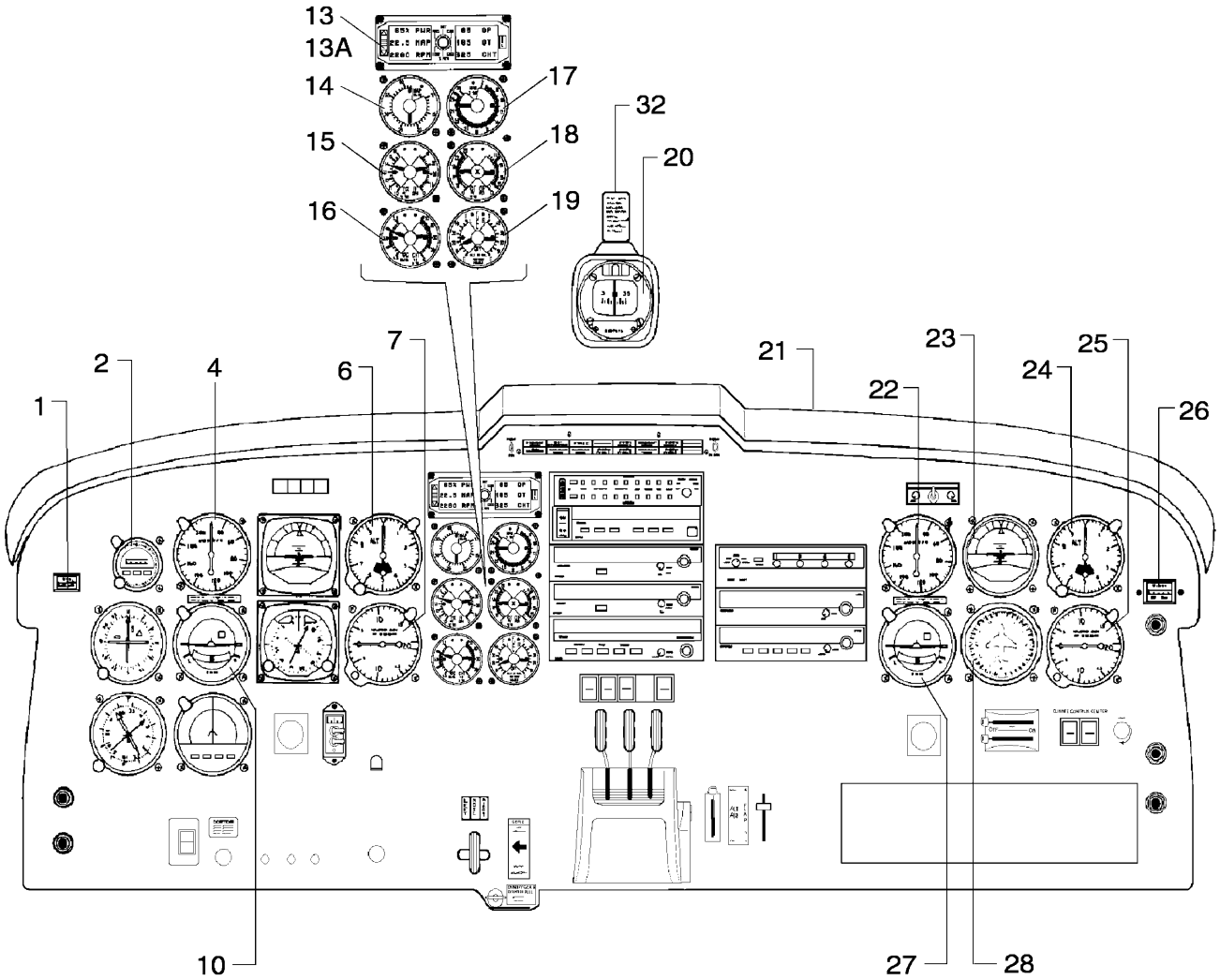

Figure 42B. Instrument Panel Installation
(Serial numbers 3246088 and up)

FIGURE ITEM	PART NUMBER	NOMENCLATURE	EFFECT FROM TO	UNITS PER ASSY
42B	100933 (D)	DRAWING - Instruments Installation, Engine	3246088 and up	
	38453 (AC)	DRAWING - Instruments Installation, Flight		
	85569 (J)	DRAWING - Instruments Installation, Co-Pilot's		
	85196 (AZ)	DRAWING - Placard Installation		
	101022 (H)	DRAWING - Glareshield Installation		
	87779 (H)	DRAWING - Electrical Installation, Standby Vacuum Sys.		
1	766-795	SWITCH - Auxiliary vacuum (F7-236-2)		1
2	600-103	INSTRUMENT - Clock (87347-005)		1
-3	DELETED			
4	602-230	INSTRUMENT - Airspeed		1
-4A	520-009	SCREW		AR
-5	DELETED			
6	599-549	INSTRUMENT - Altimeter		1
-6A	520-000	SCREW - (AN500A8-10)		AR
7	550-556	INSTRUMENT - Rate of climb (99010-005)		1
-7A	520-000	SCREW - (AN500A8-10)		AR
-8	DELETED			
-9	DELETED			
10	95219-000	INSTRUMENT - Turn indicator (pilot)		1
-10A	520-009	SCREW		AR
-11	DELETED			
-12	DELETED			
13	691-401	INDICATOR - Digital display monitor panel (100930-009)	3246088 thru 3246125	1
		(Refer to Piper Service Bulletin #1031 - latest revision)		
		(Refer to Piper Service Bulletin #1081 - latest revision)		
13A	100930-012	INSTRUMENT - Digital display monitor panel	3246126 and up	1
-13B	520-009	SCREW		4
14	602-215	INDICATOR - Manifold pressure (100930-008)		1
		(Refer to Piper Service Bulletin #1031 - latest revision)		
		(Refer to Piper Service Bulletin #1081 - latest revision)		
15	602-216	INDICATOR - EGT/fuel flow (100930-010)		1
		(Refer to Piper Service Bulletin #1031 - latest revision)		
		(Refer to Piper Service Bulletin #1081 - latest revision)		
16	602-258	INDICATOR - Vacuum/CHT (100930-013)		1
		(Refer to Piper Service Bulletin #1031 - latest revision)		
		(Refer to Piper Service Bulletin #1081 - latest revision)		
17	602-217	INDICATOR - RPM (100930-011)		1
		(Refer to Piper Service Bulletin #1031 - latest revision)		
		(Refer to Piper Service Bulletin #1081 - latest revision)		
18	602-212	INDICATOR - Oil temperature/pressure (100930-005)		1
		(Refer to Piper Service Bulletin #1031 - latest revision)		
		(Refer to Piper Service Bulletin #1081 - latest revision)		
19	602-260	INDICATOR - Fuel quantity (100930-014)		1
		(Refer to Piper Service Bulletin #1031 - latest revision)		
		(Refer to Piper Service Bulletin #1081 - latest revision)		
20	598-599	INSTRUMENT - Compass (67462-009)		1
-20A	79600-000	HOLDER - Compass		1
-20B	486-284	SCREW - (4157)		4
-20C	455-154	CONNECTOR		2
-20D	418-204	SCREW		3
21	101022-003	GLARESHIELD ASSY		1
21	101022-007	GLARESHIELD ASSY	3246218 and up	1
		(Required with Avidyne Installation)		

-Item not illustrated

When ordering, always specify Part Number, Description, and Serial Number of Aircraft

FIGURE ITEM	PART NUMBER	NOMENCLATURE	EFFECT FROM TO	UNITS PER ASSY
42B-				
22	602-200	INSTRUMENT - Airspeed		1
-22A	520-009	SCREW		AR
23	548-365	INSTRUMENT - Attitude Indicator		1
24	599-549	INSTRUMENT - Altimeter		1
-24A	520-009	SCREW		AR
25	550-556	INSTRUMENT - Rate of climb (99010-005)		1
-25A	520-009	SCREW		AR
26	51006-000	INSTRUMENT - Engine hour meter		1
-26A	514-748	SCREW		2
27	548-190	INSTRUMENT - Turn indicator (co-pilot)		1
-27A	520-009	SCREW		AR
28	548-435	INSTRUMENT - Directional gyro		1
-29	515-718	SCREW		6
-30	517-810	SCREW		6
-31	554-593	CLAMP - Instrument (5801-A)		6
32	87369-027	PLACARD - Compass (See Figure 81-19)		RF

-Item not illustrated

When ordering, always specify Part Number, Description, and Serial Number of Aircraft

THIS PAGE INTENTIONALLY LEFT BLANK

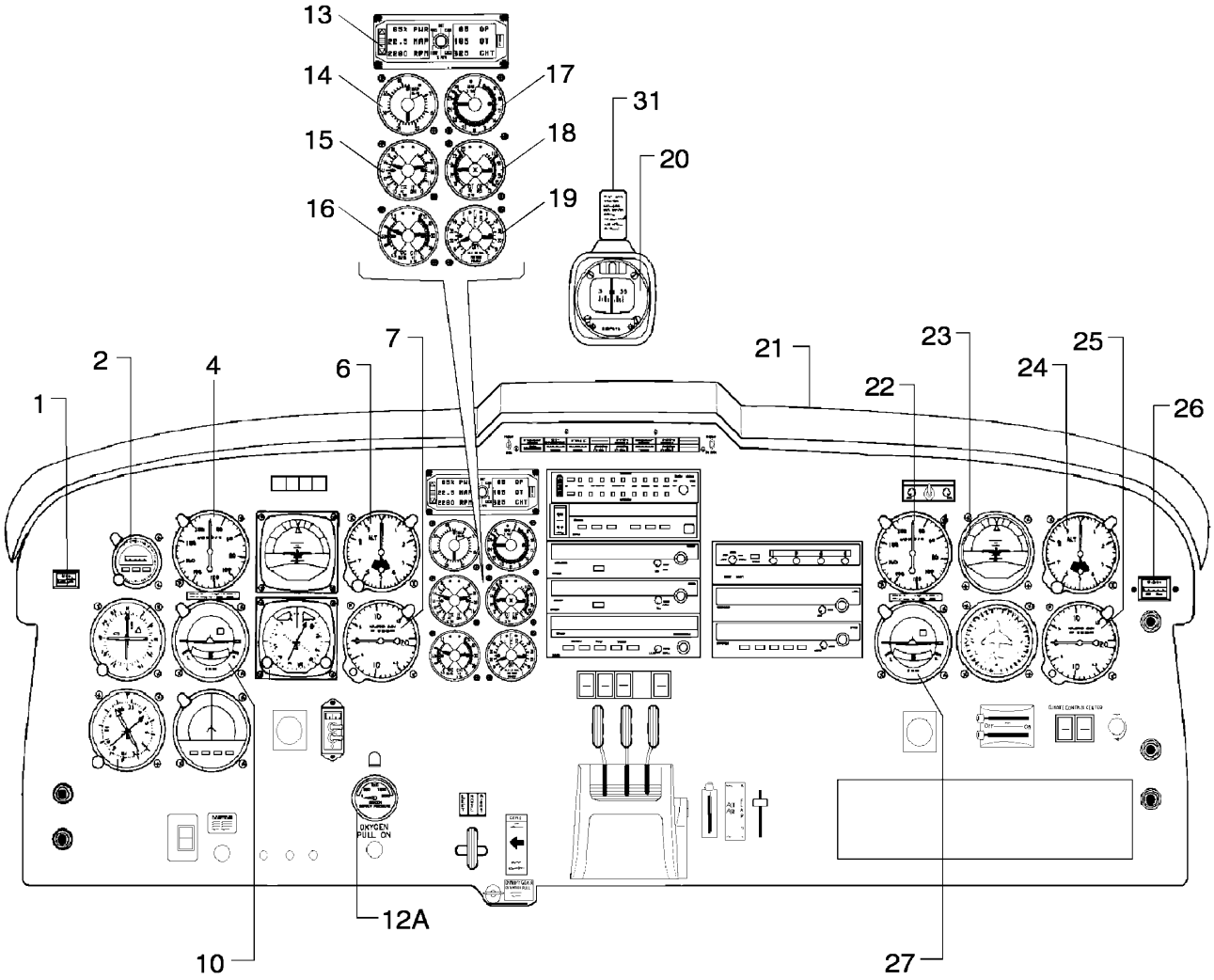

Figure 42C. Instrument Panel Installation
(Serial numbers 3257001 and up)

FIGURE ITEM	PART NUMBER	NOMENCLATURE	EFFECT FROM TO	UNITS PER ASSY
42C-	100933 (D)	DRAWING - Instruments Installation, Engine	3257001 and up	
	38453 (AC)	DRAWING - Instruments Installation, Flight		
	85569 (J)	DRAWING - Instruments Installation, Co-Pilot's	3257001 thru 3257075	
	100946 (H)	DRAWING - Oxygen System Installation		
	87779 (H)	DRAWING - Electrical Installation, Standby Vacuum Sys.		
	101022 (H)	DRAWING - Glareshield Installation		
	85196 (AV)	DRAWING - Placard Installation		
1	766-795	SWITCH - Auxiliary vacuum (F7-236-2)		1
2	600-103	INSTRUMENT - Clock (87347-005)		1
-3	DELETED			
4	602-230	INSTRUMENT - Airspeed		1
-4A	520-009	SCREW		AR
-5	DELETED			
6	599-549	INSTRUMENT - Altimeter		1
-6A	520-009	SCREW		AR
7	550-556	INSTRUMENT - Rate of climb (99010-005)		1
-7A	520-009	SCREW		AR
-8	DELETED			
-9	DELETED			
10	95219-000	INSTRUMENT - Turn indicator (pilot)		1
-10A	520-009	SCREW		AR
-11	DELETED			
-12	36964-008	OXYGEN KIT		1
12A	461-915	. GAUGE - Oxygen (800435-001)		1
13	691-400	INDICATOR - Digital display monitor panel (100930-001)		1
		(Refer to Piper Service Bulletin #1031 - latest revision)		
		(Refer to Piper Service Bulletin #1081 - latest revision)		
-13A	520-009	SCREW		4
14	602-201	INDICATOR - Manifold pressure (100624-002)		1
		(Refer to Piper Service Bulletin #1031 - latest revision)		
		(Refer to Piper Service Bulletin #1081 - latest revision)		
15	602-211	INDICATOR - TIT/fuel flow (100930-004)		1
		(Refer to Piper Service Bulletin #1031 - latest revision)		
		(Refer to Piper Service Bulletin #1081 - latest revision)		
16	602-258	INDICATOR - Vacuum/CHT (100930-013)		1
		(Refer to Piper Service Bulletin #1031 - latest revision)		
		(Refer to Piper Service Bulletin #1081 - latest revision)		
17	602-210	INDICATOR - RPM (100930-003)		1
		(Refer to Piper Service Bulletin #1031 - latest revision)		
		(Refer to Piper Service Bulletin #1081 - latest revision)		
18	602-212	INDICATOR - Oil temperature/pressure (100930-005)		1
		(Refer to Piper Service Bulletin #1031 - latest revision)		
		(Refer to Piper Service Bulletin #1081 - latest revision)		
19	602-260	INDICATOR - Fuel quantity (100930-014)		1
		(Refer to Piper Service Bulletin #1031 - latest revision)		
		(Refer to Piper Service Bulletin #1081 - latest revision)		
20	598-599	INSTRUMENT - Compass (67462-009)		1
-20A	79600-000	HOLDER - Compass		1
-20B	--- ---	SCREW - (4157)		4
-20C	455-154	CONNECTOR		2
-20D	418-704	SCREW		3
21	101022-003	GLARESHIELD ASSY		1
21	101022-007	GLARESHIELD ASSY	3257338 and up	1
		(Required with Avidyne Installation)		

-Item not illustrated

When ordering, always specify Part Number, Description, and Serial Number of Aircraft

FIGURE ITEM	PART NUMBER	NOMENCLATURE	EFFECT FROM TO	UNITS PER ASSY
42C-				
22	602-230	INSTRUMENT - Airspeed	3257001 thru 3257075	1
-22A	520-009	SCREW	3257001 thru 3257075	AR
23	548-365	INSTRUMENT - Attitude Indicator		1
24	599-549	INSTRUMENT - Altimeter	3257001 thru 3257075	1
-24A	520-009	SCREW	3257001 thru 3257075	AR
25	550-556	INSTRUMENT - Rate of climb (99010-005)	3257001 thru 3257075	1
-25A	520-009	SCREW	3257001 thru 3257075	AR
26	51006-000	INSTRUMENT - Engine hour meter		1
-26A	514-748	SCREW		2
27	548-190	INSTRUMENT - Turn and bank (co-pilot)	3257001 thru 3257075	1
-27A	520-009	SCREW	3257001 thru 3257075	AR
-28	515-718	SCREW		6
-29	517-810	SCREW		6
-30	554-593	CLAMP - Instrument (5801-A)		6
31	87369-027	PLACARD - Compass (See Figure 81-19)		RF

-Item not illustrated

When ordering, always specify Part Number, Description, and Serial Number of Aircraft

THIS PAGE INTENTIONALLY LEFT BLANK

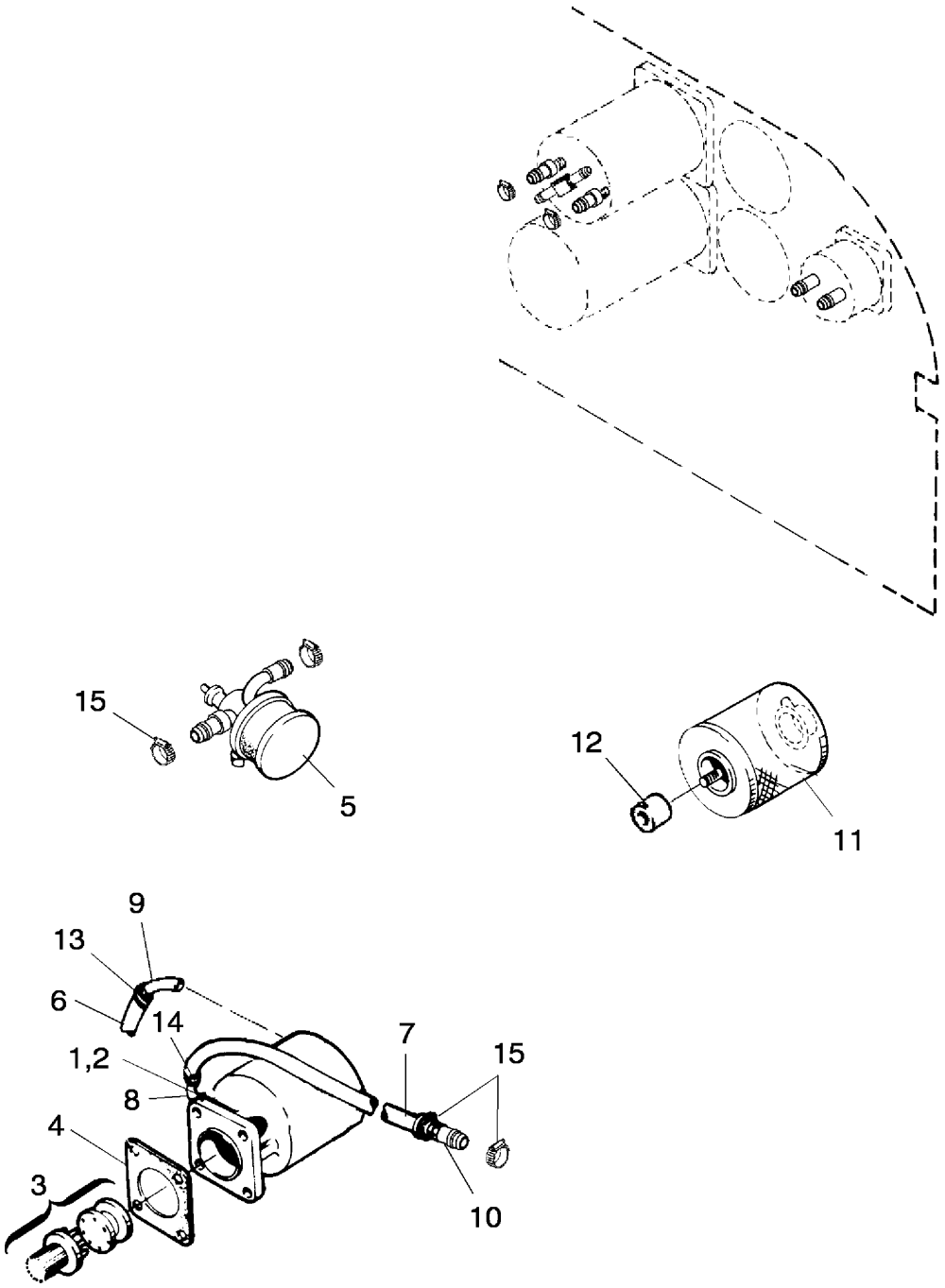

Figure 43. Vacuum System Installation
(Serial numbers 3246001 thru 3246087)

FIGURE ITEM	PART NUMBER	NOMENCLATURE	EFFECT FROM TO	UNITS PER ASSY
43	69370 (AE)	DRAWING - Vacuum System Installation	3246001 thru 3246087	
	85569 (J)	DRAWING - Co-Pilot's Instruments Options	3246001 thru 3246087	

Note: Installation of autopilot system or other optional equipment may alter the installation of the vacuum system.

1	754-575	KIT - Vacuum pump drive (79005)	1
-1A	477-850	NUT - (MS27151-12)	4
2	79399-000	PUMP ASSY - Dry vacuum	1
3	753-910	. COUPLING ASSY KIT - Vacuum pump drive	1
		(Refer to Piper Service Bulletin #1026 - latest revision)	
4	751-859	. . GASKET - Vacuum pump mounting (82-50130)	1
5	492-240	VALVE - Suction regulating (AIM2H3-19)	1
6	63904-029	HOSE - Vacuum pump exhaust	1
7	63913-064	HOSE - Vacuum pump to firewall fitting	1
8	458-958	ELBOW - (1K1-6-10)	1
9	558-900	ELBOW - (1K8-6-8)	1
10	460-807	FITTING - (1K22-10-10)	1
11	460-888	FILTER ASSY - Gyro air (66673-000)	1
-11A	757-899	. CARTRIDGE - Air Filter	1
		(Refer to Piper Service Bulletin #1041 - latest revision)	
12	63900-145	BUSHING - Air filter	1
13	554-985	CLAMP - Hose (SAE TY-E11)	1
14	554-793	CLAMP - Hose (SAE TY-F8)	1
15	454-837	CLAMP - Hose	3
-16	63913-211	HOSE - Regulator to co-pilot's D.G. (VAC)	1
		(Use only with co-pilot's instruments option installed)	
-17	554-888	CLAMP - Hose (SAE TY-F6)	4
-18	63913-211	HOSE - Filter to co-pilot's D.G. (INLET)	1
		(Use only with co-pilot's instruments option installed)	
-19	558-913	ELBOW - (Co-pilot's D.G.)(1K9-4-6)	1

Note: Installation of autopilot system or other optional equipment may alter the installation of the vacuum system.

-Item not illustrated

When ordering, always specify Part Number, Description, and Serial Number of Aircraft

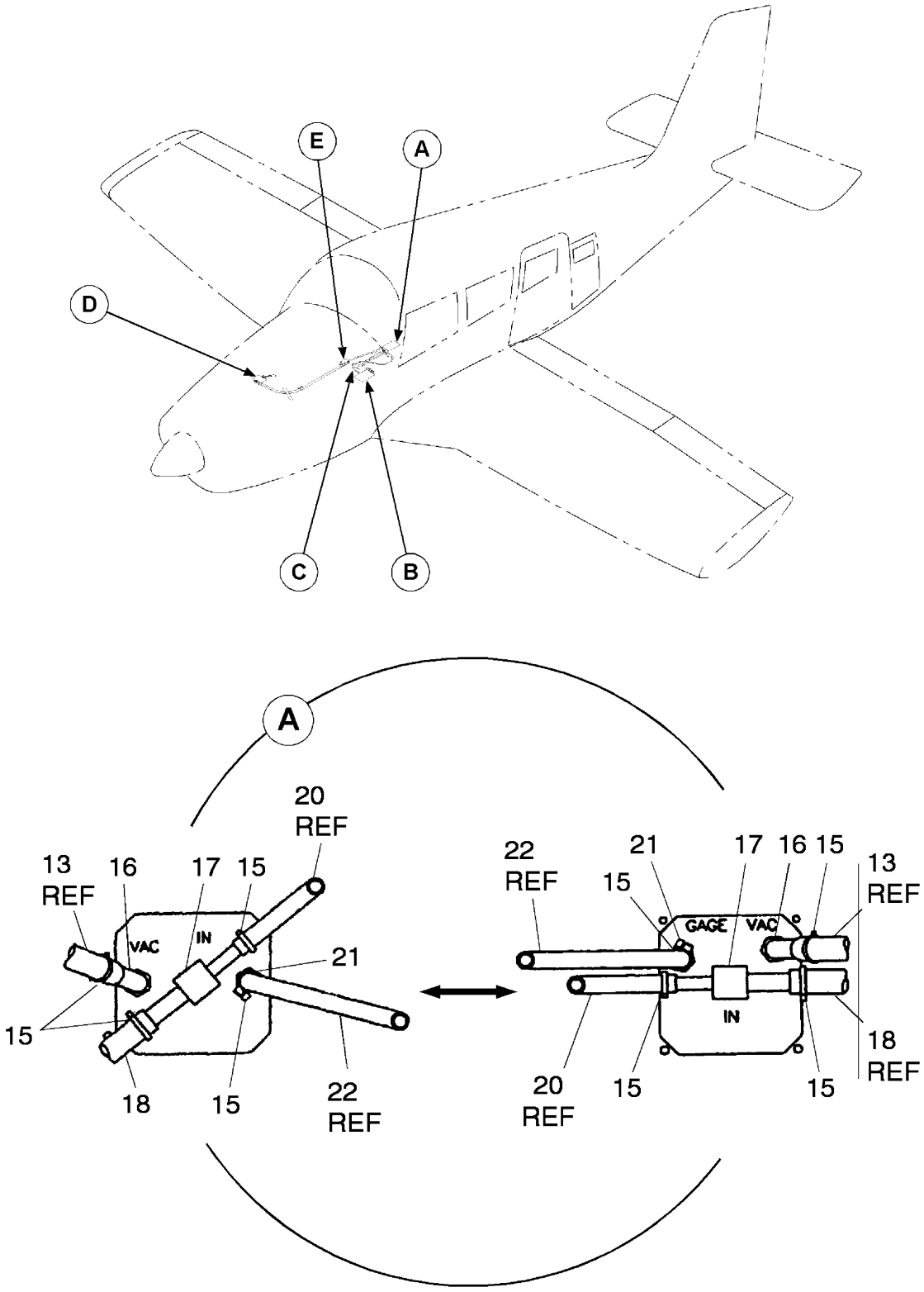

Figure 43A. Vacuum System Installation (Sheet 1 of 3)
(Serial numbers 3246088 and up and 3257001 and up)

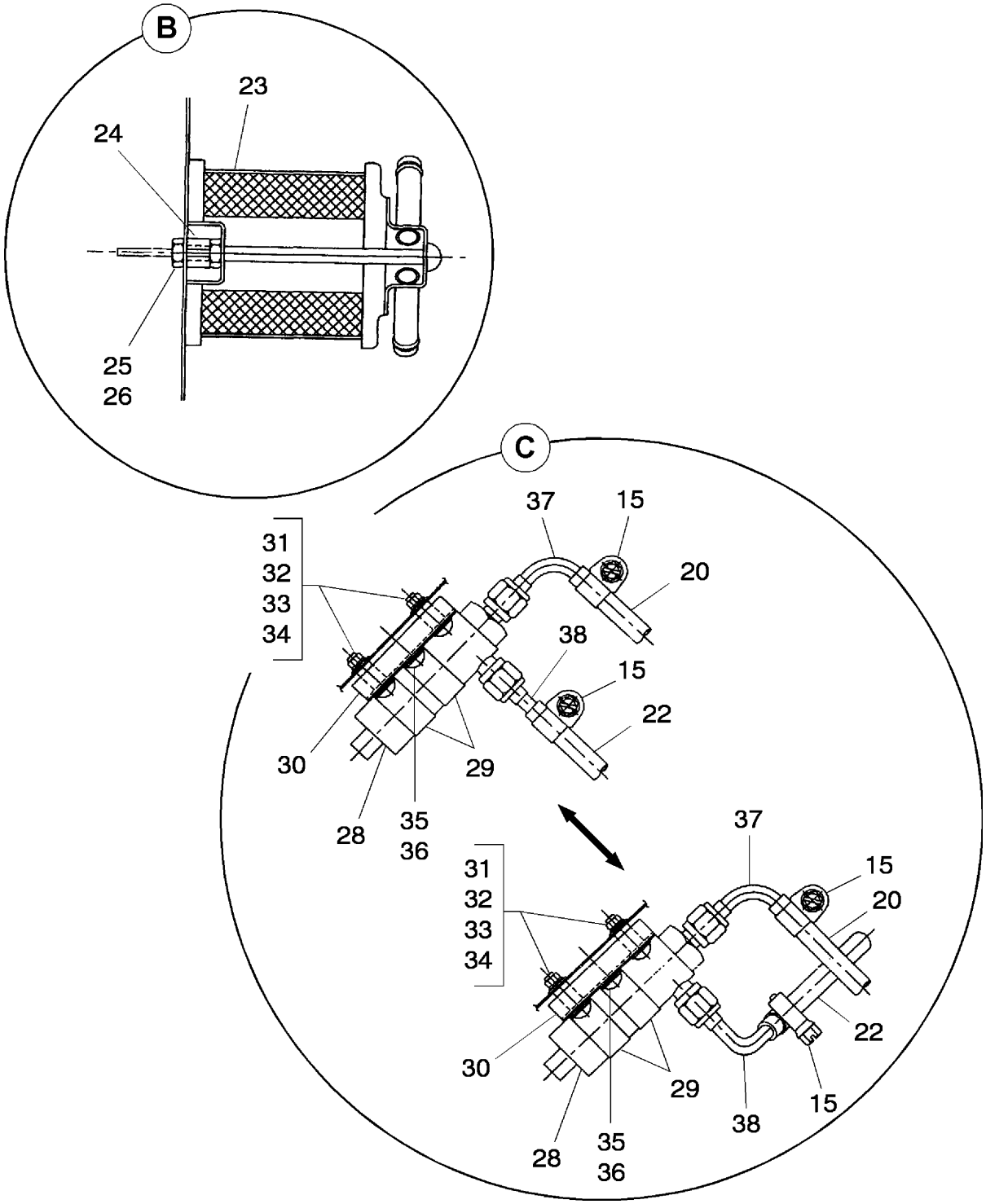

Figure 43A. Vacuum System Installation (Sheet 2 of 3)
(Serial numbers 3246088 and up and 3257001 and up)

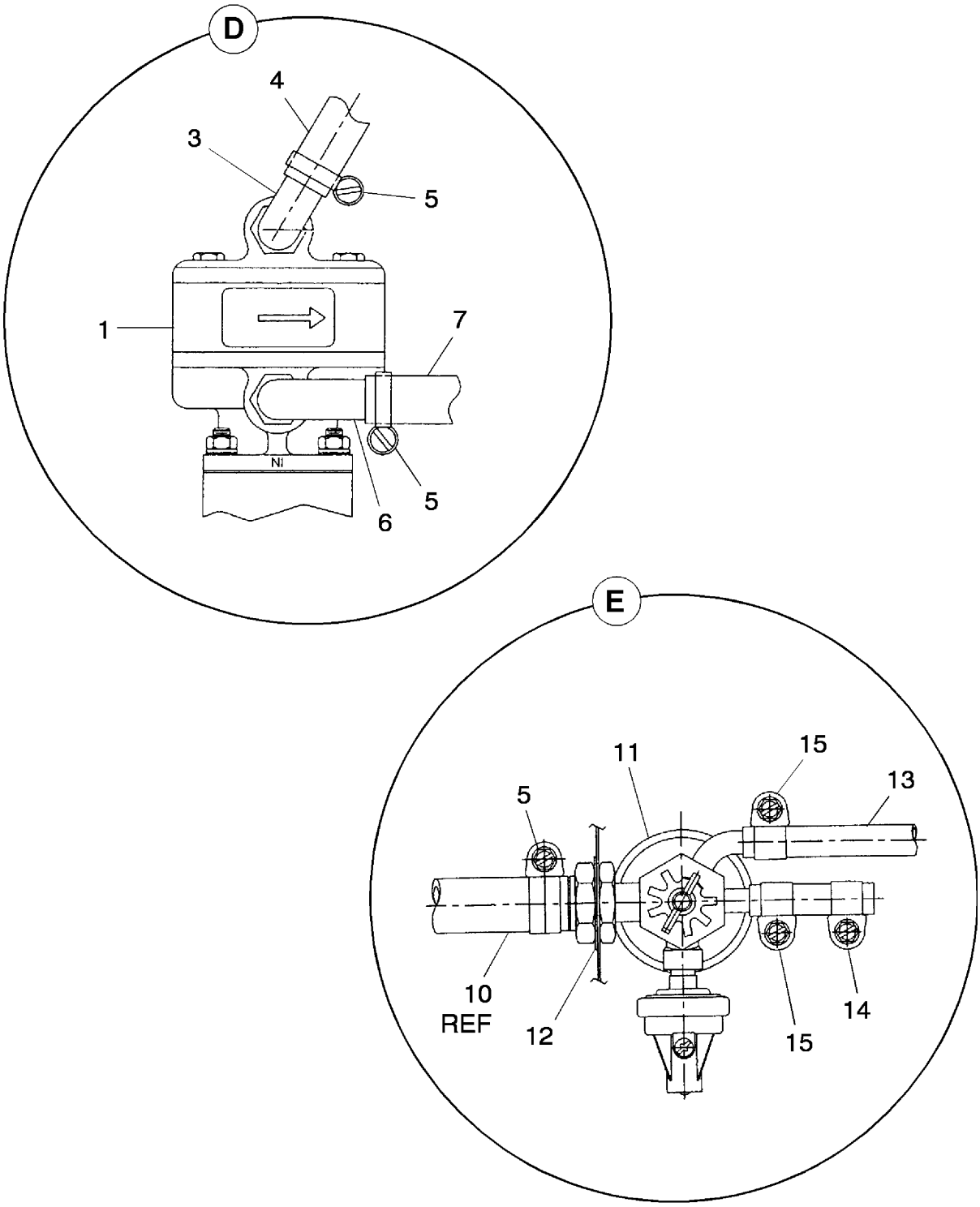

Figure 43A. Vacuum System Installation (Sheet 3 of 3)
(Serial numbers3246088 and up and 3257001 and up)

FIGURE ITEM	PART NUMBER	NOMENCLATURE	EFFECT FROM TO	UNITS PER ASSY
43A	100940 (G)	DRAWING - Vacuum System Installation	3246088 and up 3257001 and up	
	85569 (J)	DRAWING - Co-Pilot's Instrument Option	3246088 and up 3257001 and up	
Note: Installation of autopilot system or other optional equipment may alter the installation of the vacuum system.				
1	79399-005	PUMP - Dry air		1
-2	753-910	. COUPLING ASSY KIT - Vacuum pump drive (Refer to Piper Service Bulletin #1026 - latest revision)		1
3	560-775	ELBOW - Pump exhaust (1K8-6-10)		1
4	63913-228	HOSE - Pump exhaust		1
5	554-552	CLAMP		5
6	458-958	ELBOW - Pump to firewall (1K1-6-10)		1
7	63913-064	HOSE - Pump to firewall		1
-9	460-807	FITTING - Firewall (1K22-10-10)		1
10	69015-051	HOSE - Firewall to regulator valve		1
11	492-240	VALVE - Regulator (A/M 2H3-19)		1
12	690-615	WASHER - (NAS1149F1432P)		1
13	84013-103	HOSE - Regulator to pilot's attitude indicator VAC	3246088 thru 3246125 3257001 thru 3257075	1
13	63913-047	HOSE - Regulator to pilot's attitude indicator VAC	3246126 and up 3257076 and up	1
14	96268-000	PLUG ASSY - (Use only without co-pilot'sinstrument option installed)		1
15	554-575	CLAMP		9
16	558-913	ELBOW - Pilot's attitude indicator VAC		1
17	560-878	FITTING - Pilot's attitude indicator 'IN' (1K72-4-6-4)		1
18	63913-055	HOSE - Pilot's attitude indicator 'IN' to filter		1
-19	554-678	CLAMP		1
20	63913-214	HOSE - Pilot's attitude indicator 'IN' to transducer MAIN port	3246088 thru 3246125 3257001 thru 3257075	1
20	63913-231	HOSE - Pilot's attitude indicator 'IN' to transducer MAIN port	3246126 and up 3257076 and up	1
21	451-881	ADAPTER - Pilot's attitude indicator 'G' (1K10-2-4)		1
22	63913-223	HOSE - Pilot's attitude indicator 'G' to transducer REF port		1
23	460-888	FILTER ASSY - (66673-000)		1
-23A	757-899	. CARTRIDGE - Air filter (D9-18-1) (Refer to Piper Service Bulletin #1041 - latest revision)		1
24	63900-145	BUSHING		1
25	690-609	WASHER - (NAS1149F0332P)		1
26	404-526	NUT - (MS21042-3)		1
-27	96268-000	PLUG ASSY - (Use only without co-pilot'sinstrument option installed)		1
28	599-593	TRANSDUCER		1
29	454-942	CLAMP - Transducer		2
30	100916-002	CLIP ASSY		1
31	415-324	SCREW - (MS27039-1-14)		2
32	587-440	SPACER - (NAS43DD3-28FC)		2
33	690-609	WASHER - (NAS1149F0332P)		4
34	404-526	NUT - (MS21042-3)		2
35	415-317	SCREW - (MS27039-1-07)		1

-Item not illustrated

When ordering, always specify Part Number, Description, and Serial Number of Aircraft

FIGURE ITEM	PART NUMBER	NOMENCLATURE	EFFECT FROM TO	UNITS PER ASSY
43A-				
36	690-609	WASHER - (NAS1149F0332P)		1
37	83744-191	TUBE ASSY - Transducer MAIN port		1
38	84015-075	TUBE ASSY - Transducer REF port	3246088 thru 3246125 3257001 thru 3257075	1
38	83744-191	TUBE ASSY - Transducer REF port	3246126 and up 3257076 and up	1
Note: The following parts are installed as part of the co-pilot's instrument options.				
-40	63913-211	HOSE - Regulator to co-pilot's D.G. (VAC)		1
-41	554-888	CLAMP - (SAE TY-F6)		4
-42	63913-211	HOSE - Filter to co-pilot's D.G. (INLET)		1
-43	558-913	ELBOW - Co-pilot's D.G. (1K9-4-6)		2

-Item not illustrated

When ordering, always specify Part Number, Description, and Serial Number of Aircraft

THIS PAGE INTENTIONALLY LEFT BLANK

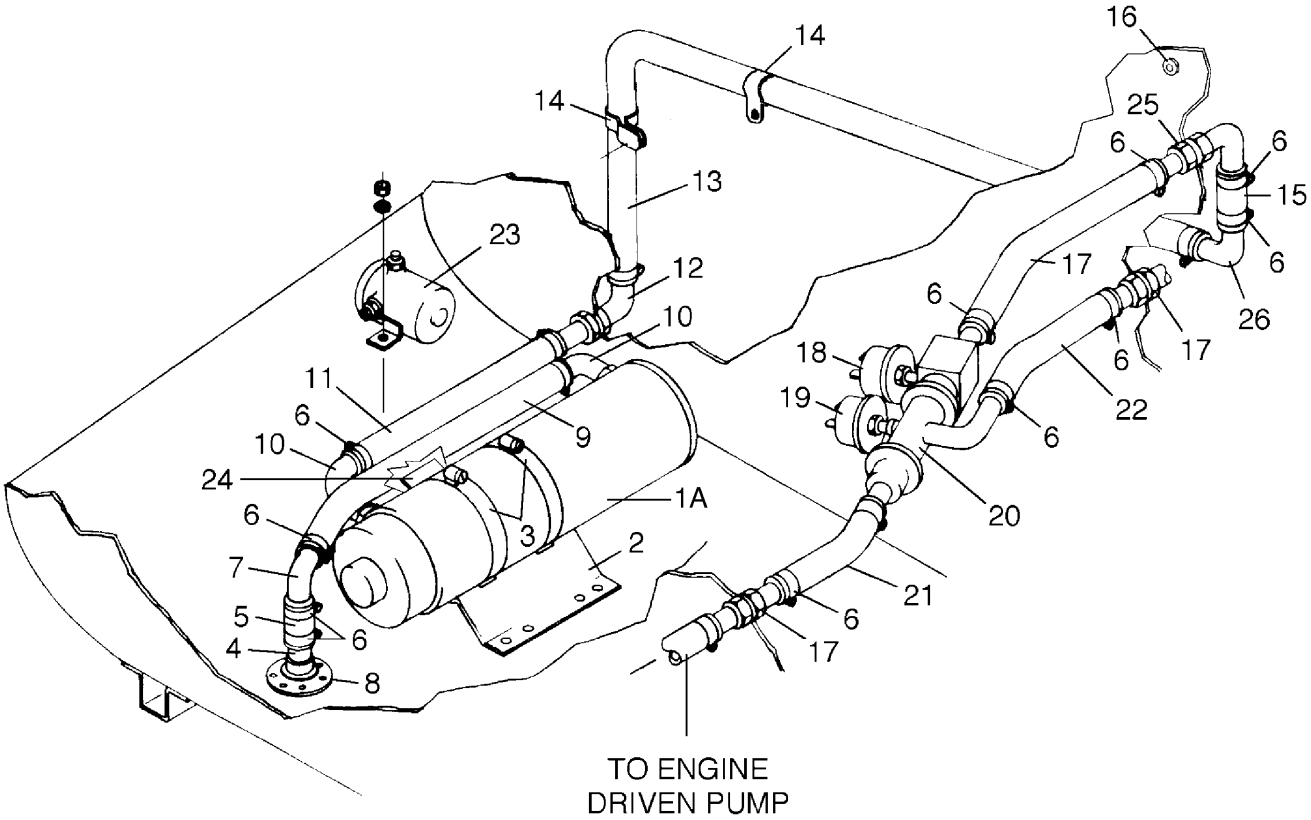

Figure 44. Standby Vacuum System Installation

FIGURE ITEM	PART NUMBER	NOMENCLATURE	EFFECT FROM TO	UNITS PER ASSY
44-	87778 (H)	DRAWING - Standby Vacuum System Installation		
	87779 (H)	DRAWING - Standby Vacuum Sys. Installation - Electrical		
-1	566-528	KIT - Auxiliary air pump 14VDC	3246001 thru 3246017	1
-1	652-349	KIT - Auxiliary air pump 28VDC	3246018 and up 3257001 and up	1
1A	461-764	PUMP ASSY - (4A2-1)	3246018 and up 3257001 and up	1
1A	461-765	PUMP ASSY - (4A3-1)	2346001 thru 3246017	1
2	758-690	BRACKET - Pump support (D5-78-1)	2346001 thru 3246017	1
2	85491-004	BRACKET - Pump support	3246018 and up 3257001 and up	1
3	654-186	CLAMP		2
4	754-906	FITTING ASSY - Exhaust (A9-233-1)		1
5	84013-047	HOSE		1
6	554-552	CLAMP		15
7	764-534	ELBOW - 90 degree beaded (D4-19-9)		1
8	--- ---	SHIELD - Exhaust (D5-83-1)		1
9	84013-079	HOSE		1
10	458-958	ELBOW - 90 degree (1K1-6-10)		2
11	84013-082	HOSE		1
12	560-987	FITTING - 90 degree bulkhead (1K43-10-10)		1
13	84013-095	HOSE		1
14	554-775	CLAMP		2
-14A	411-532	SCREW - (MS35207-263)		2
-14B	690-612	WASHER - (NAS1149F0363P)		2
-14C	404-526	NUT - (MS21042-3)		2
15	84013-021	HOSE		1
16	758-691	BUSHING (116A10003-04)		2
17	84013-055	HOSE		1
18	765-496	SWITCH - (F7-16-3)		1
19	757-790	SWITCH - (F7-16-1)		1
20	761-814	MANIFOLD - (1H5-21)		1
21	84013-074	HOSE		1
22	84013-059	HOSE		1
23	--- ---	CONTACTOR (F7-64-2)	3246001 thru 3246017	1
23	762-681	CONTACTOR (F7-64-1)	3246018 and up 3257001 and up	1
-23A	400-438	BOLT - (AN3-4A)		2
-23B	690-609	WASHER - (NAS1149F0332P)		4
-23C	404-526	NUT - (MS21042-3)		2
24	754-895	FILTER - EMI (F7-84-1)		1
-24A	415-332	SCREW - (MS27039-1-22)		2
-24B	690-609	WASHER - (NAS1149F0332P)		1
-24C	404-526	NUT - (MS21042-3)		1
25	560-987	FITTING - 90 degree bulkhead (1K43-10-10)		1
26	764-533	ELBOW (D4-139-1)		1
-30	87780-003	FLOOR ASSY - Left side F.S. 33.40 to F.S. 49.50		1
-31	419-713	SCREW - (attach floor assy to door sill)		2
-32	494-081	WASHER - Dimpled (attach floor assy to door sill)	3246001 thru 3246087	2
-32	494-004	WASHER - Dimpled (attach floor assy to door sill)	3246088 and up 3257001 and up	2
-33	406-418	CLIP NUT - (NAS395-18-1)		2

-Item not illustrated

When ordering, always specify Part Number, Description, and Serial Number of Aircraft

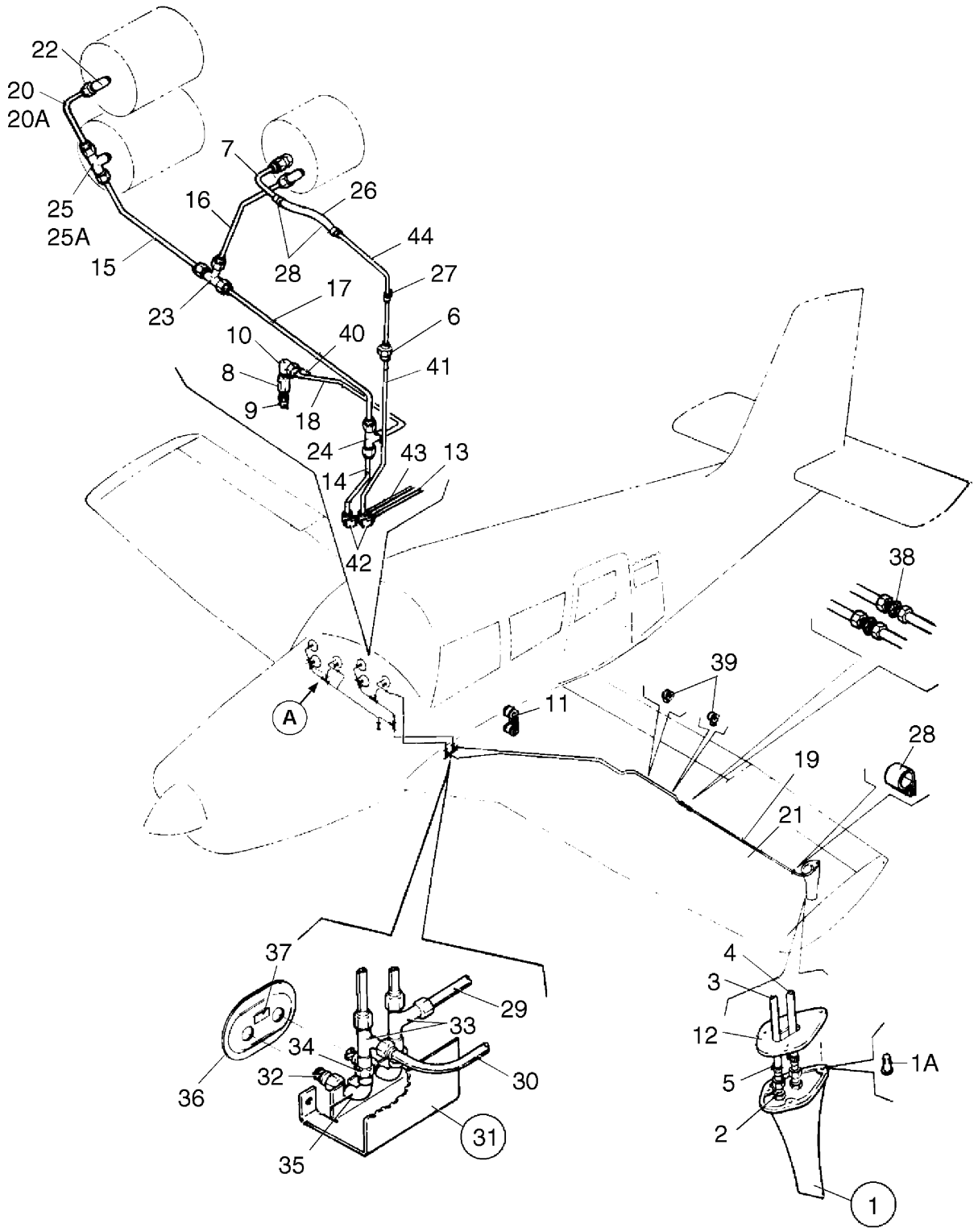

Figure 45. Pitot Static System Installation (Sheet 1 of 2)
(Serial numbers3246001 thru 3246017)

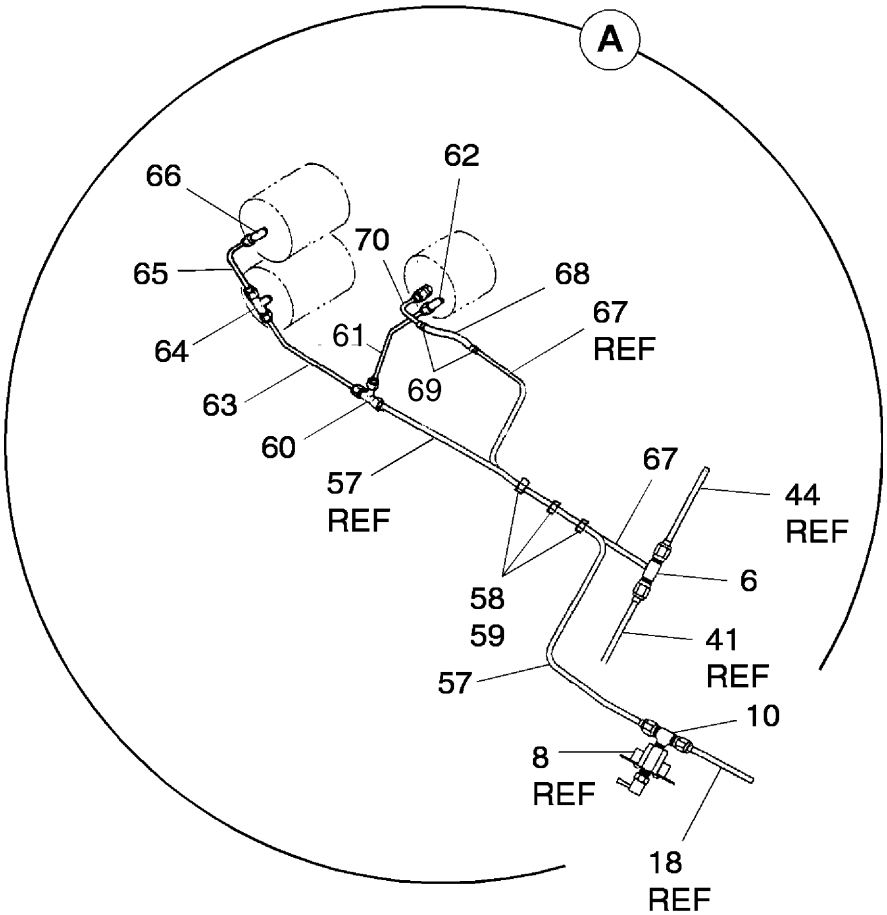

Figure 45. Pitot Static System Installation (Sheet 2 of 2)
(Serial numbers 3246001 thru 3246017)

FIGURE ITEM	PART NUMBER	NOMENCLATURE	EFFECT FROM TO	UNITS PER ASSY
45-	38548 (W)	DRAWING - Pitot Static System Installation	3246001 thru 3246017	
	85569 (J)	DRAWING - Co-Pilot's Instruments Option	3246001 thru 3246017	

Note: Installation of autopilot system and/or other optional equipment may alter the installation of the pitot static system.

1	96392-009	HEAD ASSY - Pitot (heated)		1
1A	415-535	SCREW - (MS35206-245)		3
2	556-105	. CONNECTOR - Heated pitot head (1068 x 4)		2
3	63913-034	HOSE - Pitot		1
4	63913-037	HOSE - Static		1
5	488-722	TIE - Cable (MS3367-4-9)		2
6	491-059	UNION - (AN832-3D) (Use only on airplanes without co-pilot's instrument options installed)		1
6	488-315	TEE - (AN824-3D) (Use only on airplanes with co-pilot's instrument options installed)		1
7	63207-000	TUBE - Airspeed pitot pressure		1
8	96143-011	VALVE ASSY - Static air vent		1
-8A	519-751	SCREW - (MS24617-10)		2
9	492-100	. VALVE - (CCA-7450)		1
10	458-893	. ELBOW - (AN822-3D) (Use only on airplanes without co-pilot's instrument options installed)		1
10	488-315	TEE - (AN824-3D) (Use only on airplanes with co-pilot's instrument options installed)		1
11	654-086	CLAMP - (414S-3-6)		2
12	69042-000	GASKET - Pitot head		1
13	37343-079	TUBE ASSY - Pitot pressure		1
14	37343-082	TUBE ASSY - Static		1
15	67700-350	TUBE ASSY - Static		1
16	67700-066	TUBE ASSY - Airspeed static		1
17	67700-186	TUBE ASSY - Static		1
18	67700-172	TUBE ASSY - Static		1
19	67700-317	TUBE ASSY - Pitot pressure		1
20	95153-101	TUBE ASSY - Altimeter static		1
20A	95153-158	TUBE ASSY - Static (Install in lieu of 95153-101 when encoding altimeter is installed)		1
21	67700-347	TUBE ASSY - Static		1
22	458-893	ELBOW - (AN822-3D)		1
23	488-315	TEE - (AN824-3D)		1
24	488-315	TEE - (AN824-3D)		1
25	491-059	TEE - (AN832-3D)		1
25A	691-218	TEE - (AN825-3D)(Install in lieu of AN832-3D for optional rate of climb indicator)		1
26	63913-106	HOSE - Pitot pressure		1
27	554-953	CLAMP		1
28	554-861	CLAMP - (SAE TY-F4)		4
29	67700-346	TUBE ASSY - Static		1
30	67700-316	TUBE ASSY - Pitot pressure		1
31	37994-002	SUMP ASSY - Pitot static		1
-31A	415-535	SCREW - (MS35206-245)		2
-31B	690-616	WASHER - (NAS1149FN832P)		

-Item not illustrated

When ordering, always specify Part Number, Description, and Serial Number of Aircraft

FIGURE ITEM	PART NUMBER	NOMENCLATURE	EFFECT FROM TO	UNITS PER ASSY
45-				
-31C	434-192	GROMMET - (MS35489-134S)		
32	492-241	. VALVE		2
33	488-310	. TEE - (AN826-3D)		2
34	455-173	. COUPLING - (AN910-1D)		2
35	35696-002	. ELBOW		2
36	35507-002	COVER ASSY - Pitot static drain (When ordering, specify color)		1
-36A	415-378	SCREW - (MS51957-45)		2
-36B	690-651	WASHER - (NAS1149CN832R)		
-36C	603-349	NUT		
37	69669-115	. PLACARD - Pitot drain		1
38	491-112	UNION - (62 x 3)		2
39	454-928	CLAMP		6
40	78113-000	CLIP ASSY - Alternate static source		1
41	37343-081	TUBE ASSY - Pitot static		1
42	458-879	ELBOW - (AN821-3D)		2
43	37343-078	TUBE ASSY - Static		1
44	37343-080	TUBE ASSY - Pitot pressure		1
-45	434-128	GROMMET - (MS35489-6)(2 ea. at W.S. 190.900, 174.000, 157.000, 140.090, 174.000M 157.000, 140.090, 123.150, 106.190, 86.030, 59.000, 49.250)		18
-46	488-706	TIE PLATE - (MS3339-2-9)		1
-47	415-520	SCREW - (MS35206-230)		2
-48	404-532	NUT - (MS21042-06)		2
-49	63913-163	HOSE ASSY - (Slit permissible upper side)		2
-50	587-690	STRAP - (MS3367-5-9)		2
-51	411-533	SCREW - (MS35207-264)		5
-52	690-609	WASHER - (NAS1149F0332P)		5
-53	404-526	NUT - (MS21042-3)		5
-54	411-532	SCREW - (MS35207-263)		1
-55	404-526	NUT - (MS21042-3)		1
-56	488-701	TIE - Cable (MS3367-7-9)		2
57	95153-200	TUBE ASSY - Co-pilot's static		1
58	555-411	CONNECTOR - (CR2M)		3
59	488-702	TIE - Cable (MS3367-1-9)		3
60	488-315	TEE - (AN824-3D)		1
61	39573-015	TUBE ASSY - Co-pilot's airspeed static		1
62	476-647	NIPPLE - Co-pilot's airspeed static (AN816-3D)		1
63	39573-030	TUBE ASSY - Co-pilot's rate of climb static		1
64	488-380	TEE - Co-pilot's rate of climb (AN825-3D)		1
65	95153-101	TUBE ASSY - Co-pilot's altimeter static		1
66	458-893	ELBOW - Co-pilot's altimeter static (AN822-3D)		1
67	95153-201	TUBE ASSY - Co-pilot's pitot pressure		1
68	63913-106	HOSE - Co-pilot's pitot pressure		1
69	554-861	CLAMP - (SAE TY-F4)		2
70	65165-091	TUBE - Co-pilot's airspeed pitot pressure		1

-Item not illustrated

When ordering, always specify Part Number, Description, and Serial Number of Aircraft

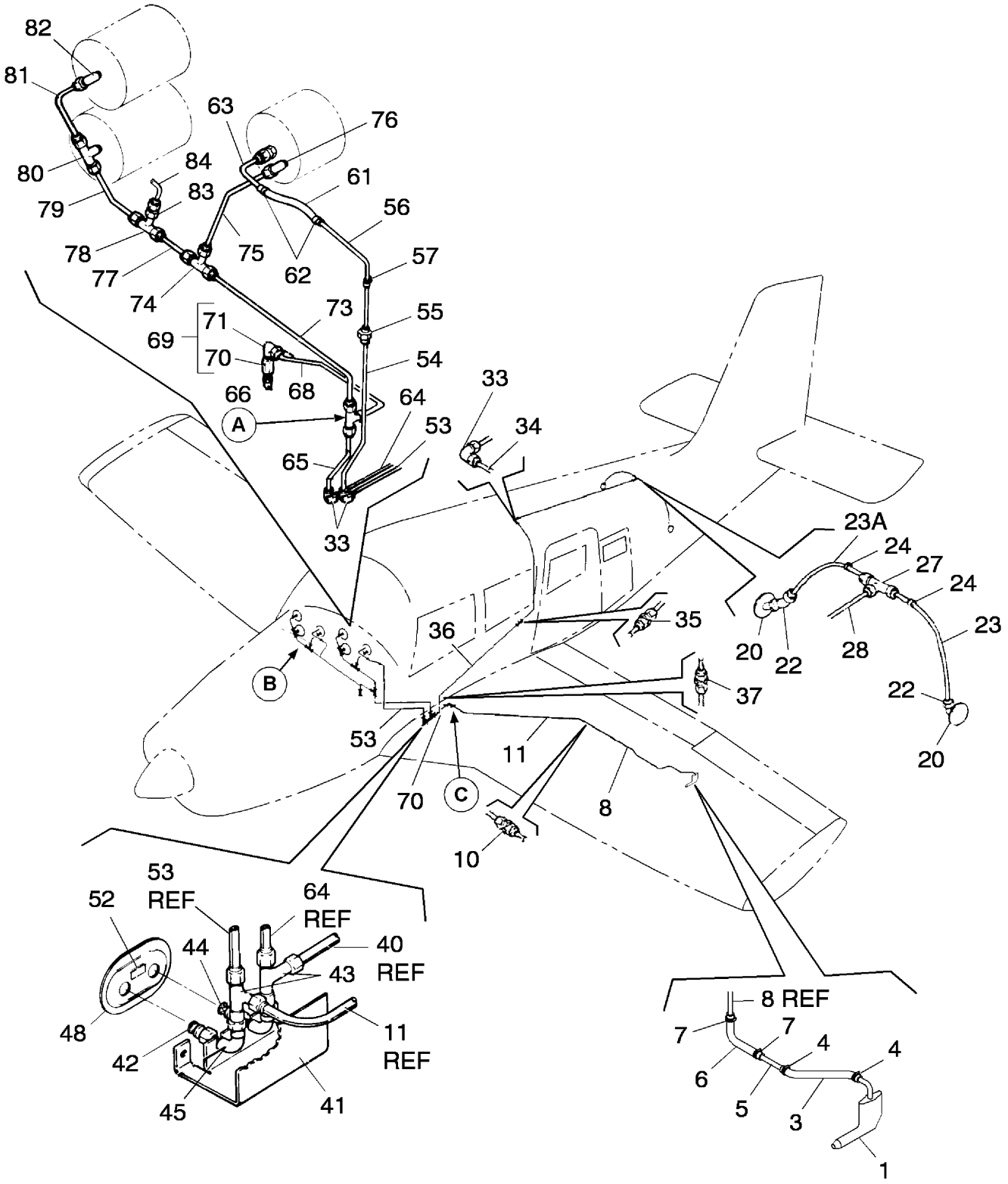

Figure 45A. Pitot Static System Installation (Sheet 1 of 2)
(Serial numbers 3246018 and up and 3257001 and up)

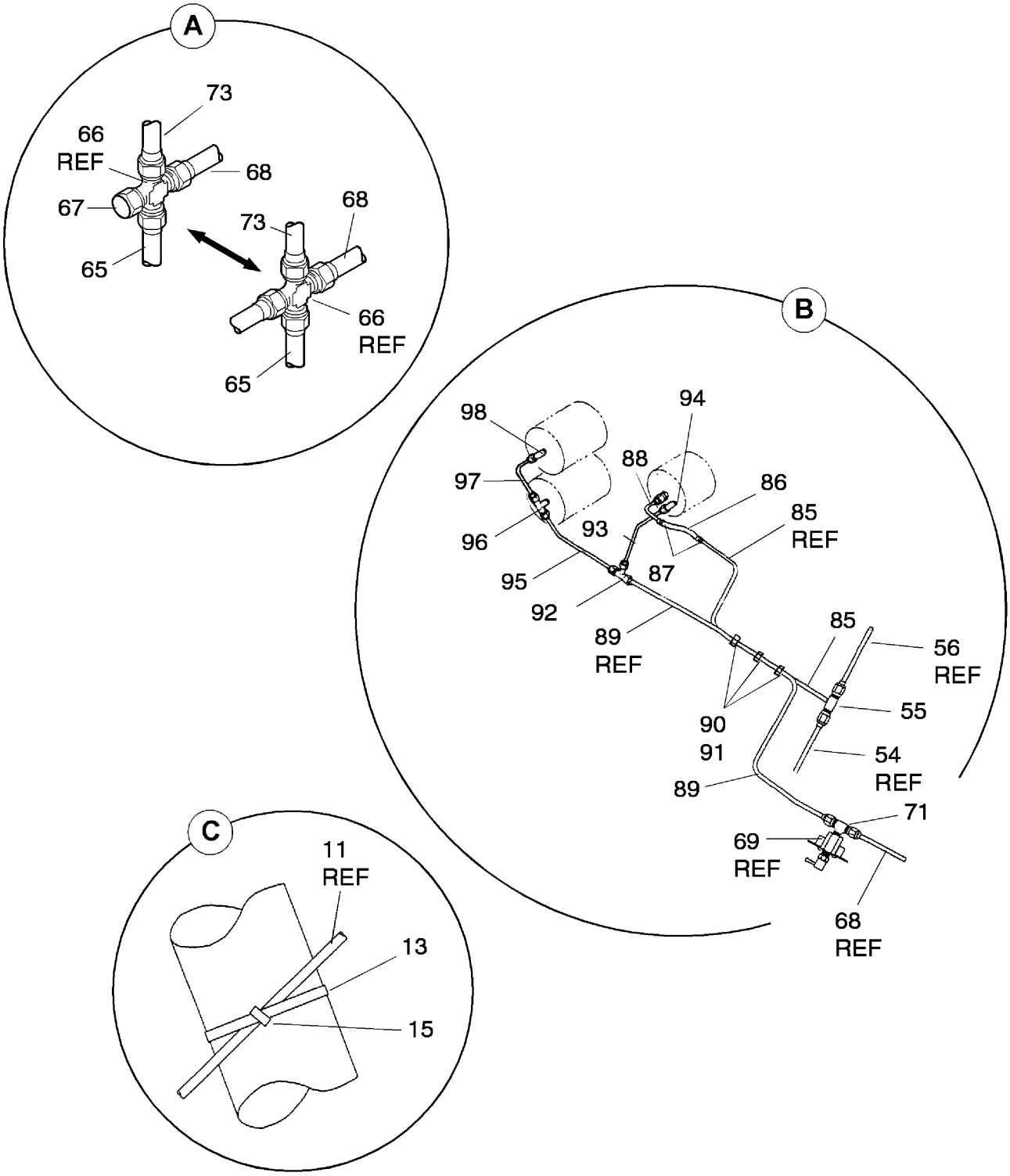

Figure 45A. Pitot Static System Installation (Sheet 2 of 2)
(Serial numbers 3246018 and up and 3257001 and up)

FIGURE ITEM	PART NUMBER	NOMENCLATURE	EFFECT FROM TO	UNITS PER ASSY
45A	85462 (M)	DRAWING - Pitot Static System Installation	3246018 and up 3257001 and up	
	85569 (J)	DRAWING - Co-pilot's Instruments Option	3246018 and up 3257001 thru 3257075	

Note: Installation of autopilot system and/or other optional equipment may alter the installation of the pilot static system.

1	85643-002	HEAD ASSY - Pitot	1
-2	414-515	SCREW - (MS24693-S48)	8
3	84013-042	HOSE - Pitot pressure	1
4	554-575	CLAMP	2
5	85462-003	ADAPTER - Pitot	1
6	63913-106	HOSE - Pitot pressure	1
7	554-575	CLAMP	2
8	67700-426	TUBE ASSY - Pitot pressure	1
-9	434-128	GROMMET - (MS35489-6)	4
10	491-112	UNION - (62 x 3)	1
11	67700-316	TUBE ASSY - Pitot pressure	1
-12	434-128	GROMMET - (MS35489-6)	2
13	488-701	TIE - Cable (MS3367-7-9)	1
-14	434-192	GROMMET - (MS35489-134S) (Feed-through to sump assy)	1
15	555-411	CONNECTOR - (CR2M)	1
-16	454-928	CLAMP	3
-17	411-533	SCREW - (MS35207-264)	3
-18	690-609	WASHER - (NAS1149F0332P)	3
-19	404-526	NUT - (MS21042-3)	3
20	78039-000	FITTING ASSY - Static line vent (LH & RH)	2
-21	420-704	RIVET - (MS20426AD3-4)	4
22	458-888	ELBOW - (MS20823-3D)	2
23	95153-020	TUBE ASSY - LH static (F.S. 220.164)	1
23A	95153-079	TUBE ASSY - RH static (F.S. 220.164)	1
24	454-928	CLAMP	2
-25	411-532	SCREW - (MS35207-263)	2
-26	404-526	NUT - (MS21042-3)	2
27	488-315	TEE - (AN824-3D)	1
28	95153-168	TUBE ASSY - Static	1
-29	554-953	CLAMP	3
-30	415-519	SCREW - (MS35206-229)	3
-31	404-528	NUT - (MS21042-06)	3
-32	434-141	GROMMET - (MS35489-20)	3
33	458-879	ELBOW - (AN821-3D)	3
34	95153-169	TUBE ASSY - Static	1
35	491-049	UNION - (AN815-3D)	1
36	95153-170	TUBE ASSY - Static	1
37	491-059	UNION - Feed-through (AN832-3D)	1
-38	477-617	NUT - (AN924-3D)	1
-39	690-620	WASHER - (NAS1149F0632P)	1
40	67700-425	TUBE ASSY - Static	1
41	37994-003	SUMP ASSY - Pitot static	1
42	492-241	. VALVE	2
43	488-310	. TEE - (AN826-3D)	2
44	455-173	. COUPLING - (AN910-1D)	2
45	35696-002	. ELBOW	2

-Item not illustrated

When ordering, always specify Part Number, Description, and Serial Number of Aircraft

FIGURE ITEM	PART NUMBER	NOMENCLATURE	EFFECT FROM TO	UNITS PER ASSY
45A-				
-46	415-535	SCREW - (MS35206-245)		2
-47	690-616	WASHER - (NAS1149FN832P)		2
48	35507-002	COVER ASSY - Pitot static drain (When ordering, specify color)		1
-49	415-378	SCREW - (MS51957-45)		2
-50	690-651	WASHER - (NAS1149CN832R)		2
-51	603-349	NUT-CLIP		2
52	69669-115	. PLACARD - Pitot drain		1
53	37343-079	TUBE ASSY - Pitot pressure		1
54	37343-081	TUBE ASSY - Pitot pressure		1
55	491-059	UNION - (AN832-3D) (Use only on airplanes without co-pilot's instrument options installed)		1
55	488-315	TEE - (AN824-3D) (Use only on airplanes with co-pilot's instrument options installed)		1
56	37343-080	TUBE ASSY - Pitot pressure		1
57	554-953	CLAMP		1
-58	411-533	SCREW - (MS35207-264)		1
-59	690-609	WASHER - (NAS1149F0332P)		1
-60	404-526	NUT - (MS21042-3)		1
61	63913-106	HOSE - Pitot pressure		1
62	554-575	CLAMP		2
63	63207-000	TUBE ASSY - Airspeed indicator pitot pressure		1
64	37343-078	TUBE ASSY - Static		1
65	37343-082	TUBE ASSY - Static		1
66	455-417	CROSS - (AN827-3D)	3246018 thru 3246125 3257001 thru 3257075	1
66	488-315	TEE - (AN824-3D)		1
67	454-289	CAP - (AN929-3)	3246018 thru 3246087	1
68	67700-172	TUBE ASSY - Static (to valve assy)	3246018 thru 3246087	1
68	67700-150	TUBE ASSY - Static (to valve assy)	3246088 and up 3257001 and up	1
69	96143-011	VALVE ASSY - Static air vent		1
70	492-100	. VALVE - (CCA-7450)		1
71	458-893	ELBOW - (AN822-3D) (Use only on airplanes without co-pilot's instrument options installed)		1
71	691-218	TEE - (AN825-3D) (Use only on airplanes with co-pilot's instrument options installed)		1
-72	519-751	SCREW - (MS24617-10) (Valve assy to instrument panel knee guard)		2
73	83744-181	TUBE ASSY - Static (to pilot's instruments)		1
74	488-315	TEE - (AN824-3D)	3246088 and up 3257001 and up	1
75	83744-256	TUBE ASSY - Airspeed indicator static	3246088 and up 3257001 and up	1
76	476-647	NIPPLE - Airspeed indicator static (AN816-3D)	3246088 and up 3257001 and up	1
77	83744-250	TUBE ASSY - Static	3246088 and up 3257001 and up	1

-Item not illustrated

When ordering, always specify Part Number, Description, and Serial Number of Aircraft

FIGURE ITEM	PART NUMBER	NOMENCLATURE	EFFECT FROM TO	UNITS PER ASSY
45A-				
	83744-256	TUBE ASSY	3246088 and up 3257001 and up	
78	691-218	TEE - (MS20825-3D)	3246088 and up 3257001 and up	1
79	83744-249	TUBE ASSY - Static	3246088 and up 3257001 and up	1
80	691-218	TEE - (MS20825-3D)	3246088 and up 3257001 and up	1
81	95153-101	TUBE ASSY - Static	3246088 thru 3246125 3257001 thru 3257075	1
81	95153-158	TUBE ASSY - Static	3246126 and up 3257076 and up	1
82	558-807	ELBOW - Adapter (MS20822-3D)(to altimeter)	3246088 and up 3257001 and up	1
83	455-173	COUPLING - (AN910-1D)	3246088 and up 3257001 and up	1
84	458-940	HOSE ELBOW - (AN844-4D)	3246088 and up 3257001 and up	1
85	95153-201	TUBE ASSY - Co-pilot's pitot pressure		1
86	63913-106	HOSE - Co-pilot's pitot pressure		1
87	554-861	CLAMP - (SAE TY-F4)		2
88	65165-091	TUBE - Co-pilot's airspeed pitot pressure		1
89	95153-200	TUBE ASSY - Co-pilot's static		1
90	555-411	CONNECTOR - (CR2M)		3
91	488-702	TIE - Cable (MS3367-1-9)		3
92	488-315	TEE - (AN824-3D)		1
93	39573-015	TUBE ASSY - Co-pilot's airspeed static		1
94	476-647	NIPPLE - Co-pilot's airspeed static (AN816-3D)		1
95	39573-030	TUBE ASSY - Co-pilot's rate of climb static		1
96	488-315	TEE - Co-pilot's rate of climb (AN824-3D)		1
97	95153-101	TUBE ASSY - Co-pilot's altimeter static		1
98	458-893	ELBOW - Co-pilot's altimeter static (AN822-3D)		1

-Item not illustrated

When ordering, always specify Part Number, Description, and Serial Number of Aircraft

THIS PAGE INTENTIONALLY LEFT BLANK

GRIDS 1I16 THRU 1I24
INTENTIONALLY BLANK

SECTION VII
POWERPLANT GROUP

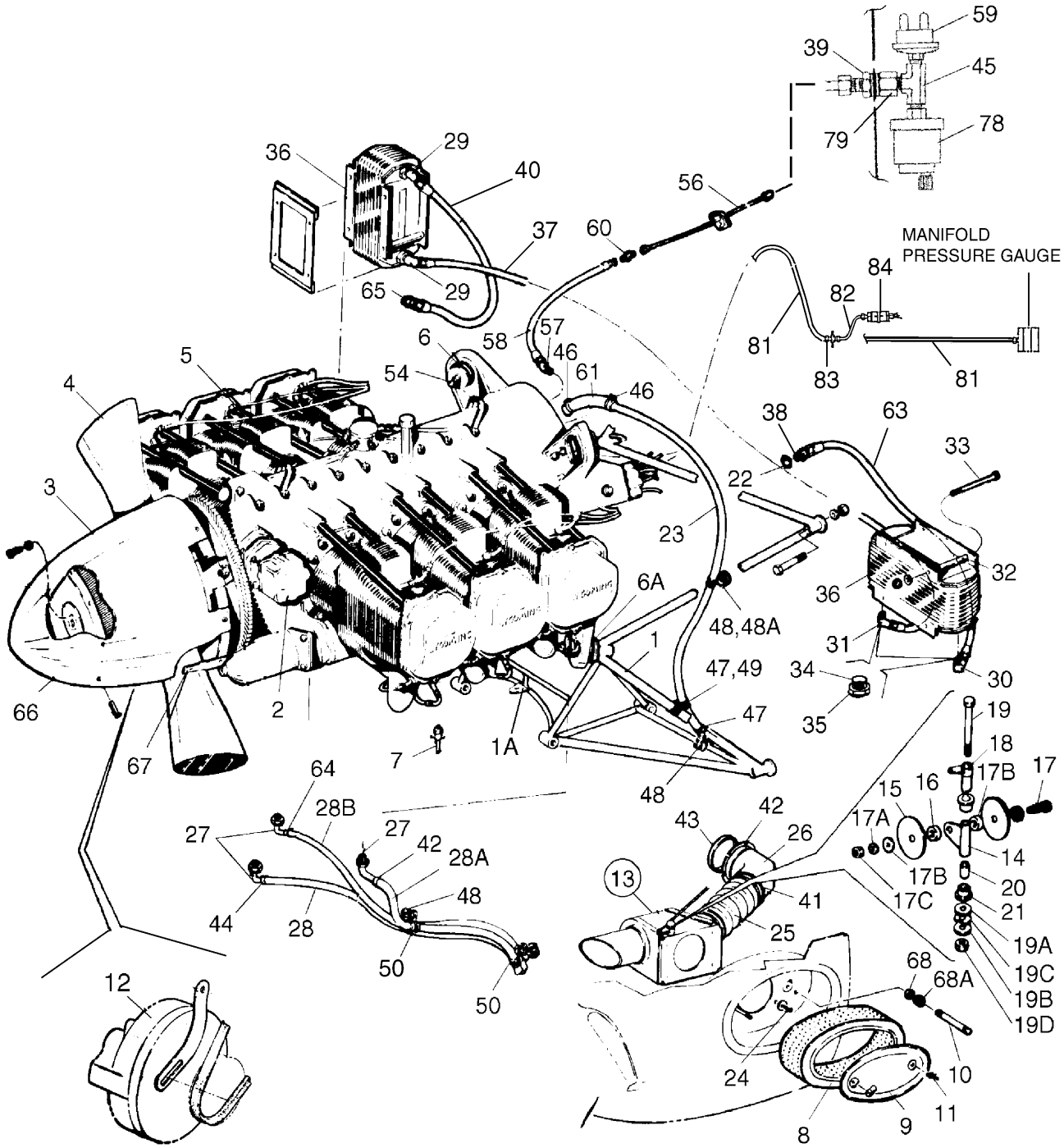

Figure 46. Power Plant Installation (PA-32R-301)
SN's 3246001 and up

FIGURE ITEM	PART NUMBER	NOMENCLATURE	EFFECT FROM TO	UNITS PER ASSY
46	85234 (Y)	DRAWING - Power Plant Installation		
	85325 (D)	DRAWING - Engine Instrument Lines Installation	3246001 thru 3246087	
	100928 (E)	DRAWING - Engine Instrument Lines Installation	3246088 and up	
1	38729-021	MOUNT ASSY (Refer to Piper Service Bulletin #1092 - Latest Revision)		1
1A	104642-002	. BRACKET ASSY (Refer to Piper Service Bulletin #1092 - Latest Revision)		1
2	463-255	GOVERNOR - Propeller		1
3	587-726	SPINNER ASSY - Propeller		1
4	551-037	PROPELLER ASSY - Hartzell, three blade (See Figure 50 for component parts)		1
5	----- -----	ENGINE ASSY (Secure from Textron Lycoming Corporation, Williamsport, PA)		1
6	475-115	MOUNTING KIT - Engine upper (J9613-12)		2
6A	470-516	MOUNTING KIT - Engine lower (J9613-19)		2
-6B	401-533	BOLT - (AN7-33A)		2
-6C	690-626	WASHER - (NAS1149F0732P)		4
-6D	404-891	NUT - (MS20365-720C)		2
7	61879-002	VALVE ASSY - Oil drain (492-018)		1
8	89308-000	FILTER - Air (460-632) (Refer to Piper Service Bulletin #1022 - Latest Revision for serial numbers 3246001 thru 3246117)		1
9	38019-014	CAP - Air filter		1
10	38019-003	STUD		2
11	690-609	WASHER - (NAS1149F0332P)		2
-11A	407-043	WASHER - Lock (MS35338-43)		2
-11B	477-668	WING NUT - (WC-02)		2
-11C	95061-308	SPACER		2
12	----- -----	ALTERNATOR - 90 amp, 28 volt (Secure from Textron Lycoming Corporation, Williamsport, PA)		1
13	38080-022	VALVE BOX ASSY - Induction air		1
14	38080-009	. ARM ASSY		1
15	38080-024	. VALVE DISC		2
16	38080-015	. SPACER		2
17	401-269	. BOLT - (AN3-10A)		1
17A	407-800	. WASHER - (AN970-3)		2
17B	407-043	. WASHER - Spring (MS35338-43)		1
17C	404-526	. NUT - (MS21042-3)		1
18	38080-012	. CONTROL ASSY		1
19	401-343	. BOLT - (AN4-53)		1
19A	690-626	. WASHER - (NAS1149F0732P)		1
19B	62833-086	. WASHER		1
19C	587-384	. WASHER - Spring (3502-22-00)		1
19D	404-101	. NUT - (AN310-4)		1
-19E	424-052	. COTTER PIN - (MS24665-134)		1
20	38080-017	. BUSHING		1
21	452-619	. BEARING - (MS17796-58)		2
22	479-402	O-RING - (MS28778-010)		2
23	38166-000	TUBE - Oil breather		1

-Item not illustrated

When ordering, always specify Part Number, Description, and Serial Number of Aircraft

FIGURE ITEM	PART NUMBER	NOMENCLATURE	EFFECT FROM TO	UNITS PER ASSY
46-				
24	407-800	WASHER - (AN970-3)		1
-24A	404-526	NUT - (MS21042-3)		1
-24B	404-224	CHECK NUT - (AN315-3R)		1
25	99849-008	HOSE - Air duct, flexible		1
26	69232-000	ELBOW ASSY - Engine air filter (Refer to Piper Service Bulletin #1009 - Latest Revision)		1
26	101090-002	ELBOW ASSY - Engine air filter (Refer to Piper Service Bulletin #1009 - Latest Revision)	3246001 thru 3246094	1
27	492-091	VALVE ASSY - Automatic fuel drain, left, right and center		3
28	69015-002	HOSE - Automatic fuel, drain, left	3246001 thru 3246087	1
28	69015-004	HOSE - Automatic fuel, drain, left	3246088 and up	1
28A	63913-026	HOSE - Automatic fuel, drain, right		1
28B	69015-004	HOSE - Automatic fuel, drain, center		1
29	558-779	ELBOW		2
30	458-905	ELBOW - (AN833-8D)		1
31	458-914	ELBOW		1
32	86700-007	TUBE - Spacer		8
33	400-461	BOLT - (AN3-36A)		8
-33A	690-612	WASHER - (NAS1149FN363P)		16
-33B	690-609	WASHER - (NAS1149F0332P)		16
-33C	404-526	NUT - (MS21042-3)		8
34	484-879	O-RING - (MS28778-8)		4
35	477-621	NUT - (AS5178D08)		4
36	557-564	COOLER ASSY - Oil		2
37	63901-098	HOSE (565-666)		1
38	79869-002	REDUCER		1
39	477-629	NUT - (AS5178-04)		1
-39A	690-626	WASHER - (NAS1149F0732P)		2
40	63901-100	HOSE (565-668)		1
41	554-883	CLAMP		2
42	555-846	CLAMP		1
43	69231-000	SPACER		1
44	454-806	CLAMP - (SAE TY-E7)		2
45	588-469	TEE		1
46	554-701	CLAMP		2
47	554-881	CLAMP		4
48	454-977	CLAMP		3
48A	554-568	CLAMP		3
-48B	411-532	SCREW - (MS35207-263)		2
-48C	404-526	NUT - (MS21042-3)		2
49	554-567	CLAMP		1
50	554-881	CLAMP		4
54	401-535	BOLT - (AN7-35A)		2
-54A	690-626	WASHER - (NAS1149F0732P)		2
-54B	690-630	WASHER - (NAS1149F0763P)		2
-54C	404-891	NUT - (MS20365-720C)		4
56	67700-082	TUBE ASSY - Oil pressure gauge	3246001 thru 3246087	1
56	67700-430	TUBE ASSY - Oil pressure gauge	3246088 and up	1
-56A	486-594	CABLE - Tachometer (penetration of firewall) (connects to oil pressure gauge)	3246001 thru 3246087	1
57	68778-000	FITTING		1

-Item not illustrated

When ordering, always specify Part Number, Description, and Serial Number of Aircraft

FIGURE ITEM	PART NUMBER	NOMENCLATURE	EFFECT FROM TO	UNITS PER ASSY
46-				
58	63901-174	HOSE ASSY - Oil pressure	3246088 and up	1
58	63901-052	HOSE ASSY - Oil pressure	3246001 thru 3246087	1
58	63901-027	HOSE ASSY - Oil pressure (alternate for 63901-052)	3246001 thru 3246087	1
-58A	454-935	CLAMP	3246088 and up	2
-58A	454-929	CLAMP	3246001 thru 3246087	2
-58B	411-532	SCREW - (MS35207-263)		1
-58C	404-526	NUT - (MS21042-3)		1
59	85342-002	SWITCH - Oil pressure		1
60	491-055	UNION - (AN815-4)	3246001 thru 3246087	1
60	491-063	UNION - (AN832-4)	3246088 and up	1
-60A	454-935	CLAMP	3246001 thru 3246087	2
-60B	411-532	SCREW - (MS35207-263)	3246001 thru 3246087	1
-60C	404-526	NUT - (MS21042-3)	3246001 thru 3246087	1
61	63913-133	HOSE - Oil breather		1
63	63901-099	HOSE		1
64	454-983	CLAMP		1
65	484-139	REDUCER - (MS24399-D16)		1
66	754-633	DOME - Spinner (C-4548)		1
67	763-476	PLATE - Filler		3
68	407-800	WASHER - (AN970-3)		1
68A	404-224	NUT - (AN315-3R)		1
78	86684-002	TRANSDUCER - Oil pressure (14 volt) (489-449)	3246001 thru 3246017	1
78	548-914	TRANSDUCER - Oil pressure (28 volt)	3246018 thru 3246087	1
78	599-594	TRANSDUCER - Oil pressure	3246088 and up	1
79	557-580	CONNECTOR - Bulkhead		1
-80	85239-002	FILTER BOX ASSY		1
-80A	416-785	SCREW - (MS24693-S272)		3
81	35801-018	TUBE ASSY - Manifold pressure	3246001 thru 3246087	2
81	56958-050	TUBE ASSY - Manifold pressure	3246088 and up	1
82	68005-000	TUBE ASSY - Manifold pressure	3246001 thru 3246087	1
82	67700-429	TUBE ASSY - Manifold pressure	3246088 and up	
83	551-873	BULKHEAD - Union(AN807-4)	3246001 thru 3246087	1
83	551-890	BULKHEAD - Union (AN807-4J) (Alternate for 551-873)	3246001 thru 3246087	1
83	491-063	UNION - (AN832-4)	3246088 and up	2
84	460-685	CONNECTOR	3246001 thru 3246087	1
84	599-592	TRANSDUCER	3246088 and up	1

-Item not illustrated

When ordering, always specify Part Number, Description, and Serial Number of Aircraft

THIS PAGE INTENTIONALLY LEFT BLANK

THIS PAGE INTENTIONALLY LEFT BLANK

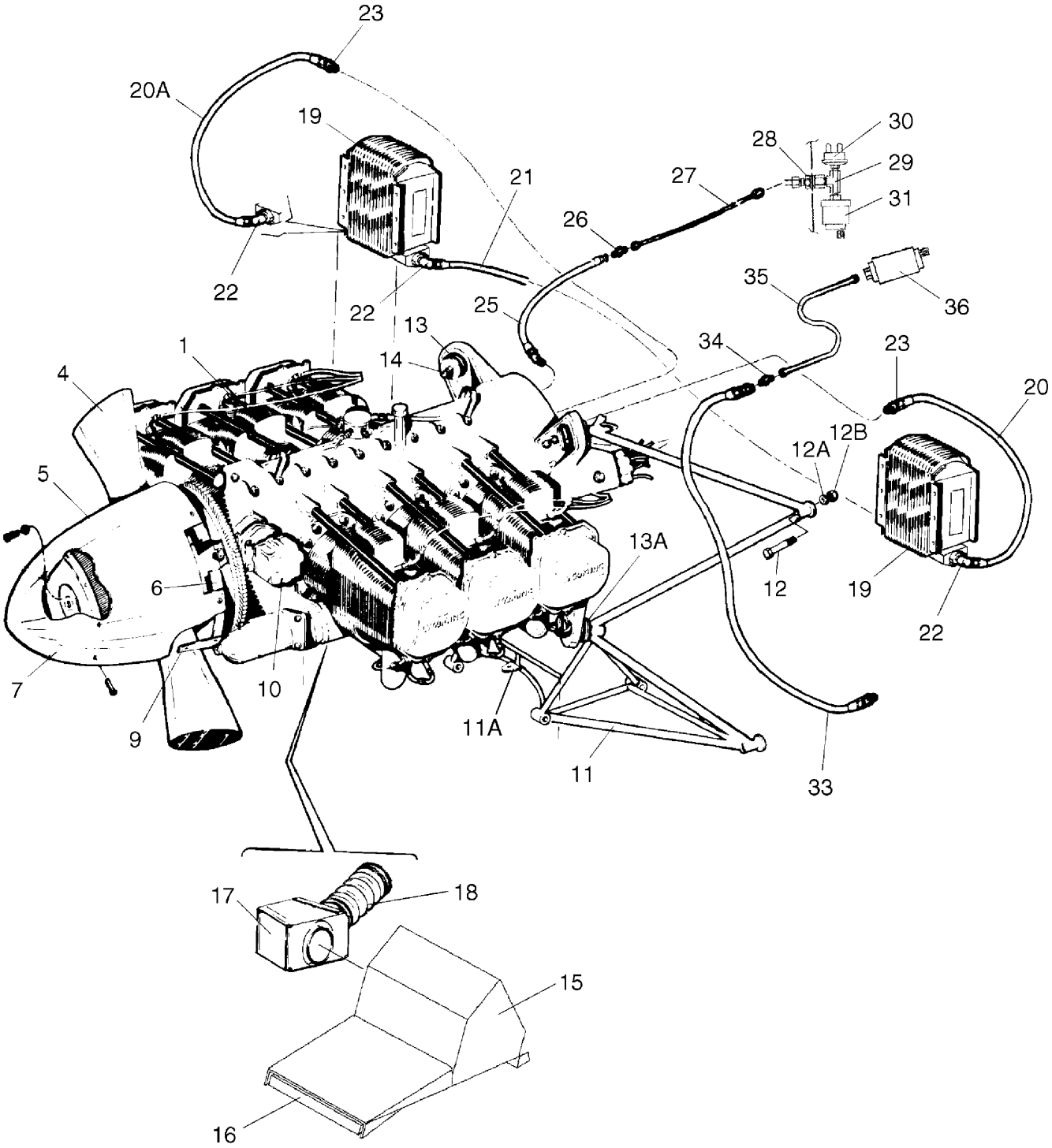

Figure 46A. Power Plant Installation (PA-32R-301T)
SN's 3257001 and up

FIGURE ITEM	PART NUMBER	NOMENCLATURE	EFFECT FROM TO	UNITS PER ASSY
46A	100920 (V)	DRAWING - Power Plant Installation		
	100928 (E)	DRAWING - Engine Instrument Lines Installation		
	100932 (D)	DRAWING - Alternate Air Box Assy		
1	----- -----	ENGINE ASSY (Secure from Textron Lycoming Corporation, Williamsport, PA)		1
-1A	----- -----	ALTERNATOR - 90 amp, 28 volt (Secure from Textron Lycoming Corporation, Williamsport, PA)		1
4	551-043	PROPELLER ASSY		1
5	551-035	SPINNER ASSY - Propeller		1
6	587-742	. BULKHEAD ASSY - Propeller		1
7	587-741	. DOME - Spinner		1
9	763-476	PLATE - Filler		3
10	463-262	GOVERNOR - Propeller		1
-10A	755-146	. GASKET - Propeller governor		1
11	38729-021	MOUNT ASSY - Engine and nose gear strut (Refer to Piper Service Bulletin #1092 - Latest Revision)		1
11A	104642-002	. BRACKET ASSY (Refer to Piper Service Bulletin #1092 - Latest Revision)		1
12	401-405	BOLT - (AN6-25A)		5
12A	690-629	WASHER - (NAS1149F0663P)		AR
12B	404-563	NUT - (MS21045-6)		5
13	475-115	MOUNTING KIT - Engine upper (J9613-12)		2
13A	470-516	MOUNTING KIT - Engine lower (J9613-19)		2
-13B	581-605	PLUG - (Upper mounts only) (192-1)		2
-13C	24754-005	HEAT SHIELD - (Lower RH mount only)		1
14	401-535	BOLT - Upper mounts (AN7-35A)		2
-14A	401-527	BOLT - Lower mounts (AN7-34A)		2
-14B	690-626	WASHER - (NAS1149F0732P)		4
-14C	690-630	WASHER - (NAS1149F0763P)		4
-14D	404-891	NUT - (MS20365-720C)		4
-14E	85012-101	WASHER - Lower mounts		2
15	100923-002	BOX ASSY - Alternate air		1
-15A	411-532	SCREW - (MS35207-263)		6
-15B	690-612	WASHER - (NAS1149FN363P)		6
16	561-020	FILTER - Air		1
17	100932-002	BOX ASSY - Diverter		1
-17A	100932-003	. SHAFT ASSY - Diverter		1
-17B	100932-027	. DOOR ASSY - Diverter (Refer to Piper Service Bulletin #1025 - Latest Revision)		1
-17C	415-521	. SCREW - (MS35206-231) (Refer to Piper Service Bulletin #1025 - Latest Revision)		1
-17D	404-528	. NUT - (MS21042-06) (Refer to Piper Service Bulletin #1025 - Latest Revision for serial numbers 3257002 thru 3257062)		1
-17E	95061-311	. BUSHING		1
-17F	95061-310	. BUSHING		1
18	565-455	HOSE - Diverter		1

-Item not illustrated

When ordering, always specify Part Number, Description, and Serial Number of Aircraft

FIGURE ITEM	PART NUMBER	NOMENCLATURE	EFFECT FROM TO	UNITS PER ASSY
46A-				
-18A	454-993	CLAMP		2
19	557-903	COOLER ASSY - Oil		2
-19A	101120-002	SEAL - Oil cooler		2
-19B	400-464	BOLT - (AN3-41A)		8
-19C	86062-094	BUSHING		1
-19D	690-612	WASHER - (NAS1149FN363P)		AR
-19E	690-609	WASHER - (NAS1149F0332P)		8
-19F	406-443	NUT - (NAS679A3W)		8
20	63901-179	HOSE ASSY - Oil cooler		2
20A	566-427	HOSE		1
21	63901-197	HOSE ASSY - Oil cooler		1
22	558-779	ELBOW		4
23	476-688	NIPPLE - (AN816-8)		2
-24	DELETED			
25	63901-174	HOSE ASSY - Oil pressure		1
-25A	454-935	CLAMP		2
-25B	411-532	SCREW - (MS35207-263)		1
-25C	404-526	NUT - (MS21042-3)		1
26	491-063	UNION - (AN832-4)		1
-26A	80122-169	WASHER		2
-26B	477-629	NUT - (AS5178-04)		1
27	67700-430	TUBE ASSY - Oil pressure		1
28	557-580	CONNECTOR - Bulkhead		1
-28A	690-626	WASHER - (NAS1149F0732P)		2
-28B	477-629	NUT - (AS5178-04)		1
29	588-469	TEE - (1/8MMS-S)		1
30	85342-002	SWITCH - Oil pressure		1
31	599-594	TRANSDUCER - Oil pressure	3257001 thru 3257198	1
-32	DELETED			
33	63901-171	HOSE ASSY - Manifold pressure		1
-33A	454-868	CLAMP		1
-33B	454-935	CLAMP		1
-33C	411-532	SCREW - (MS35207-263)		1
-33D	404-526	NUT - (MS21042-3)		1
34	458-938	ELBOW - (SAEAS1040-0404)		1
-34A	80122-169	WASHER		2
-34B	477-629	NUT - (AS5178-04)		1
35	67700-429	TUBE ASSY - Manifold pressure		1
36	599-592	TRANSDUCER - Manifold pressure		1
-36A	554-775	CLAMP		1
-36B	411-533	SCREW - (MS35207-264)		1

-Item not illustrated

When ordering, always specify Part Number, Description, and Serial Number of Aircraft

THIS PAGE INTENTIONALLY LEFT BLANK

THIS PAGE INTENTIONALLY LEFT BLANK

THIS PAGE INTENTIONALLY LEFT BLANK

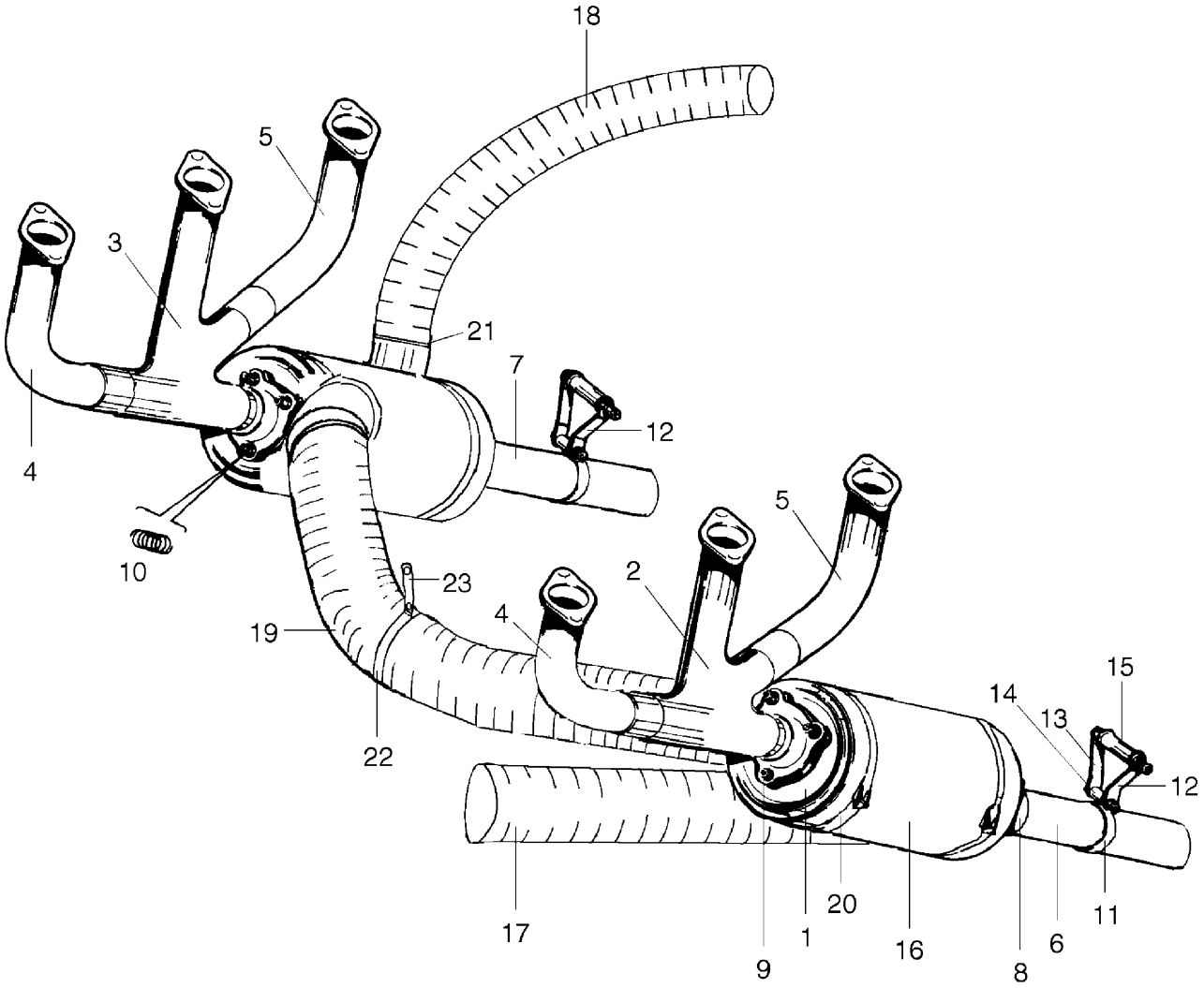

Figure 47. Engine Exhaust System Installation

FIGURE ITEM	PART NUMBER	NOMENCLATURE	EFFECT FROM TO	UNITS PER ASSY
47	85234 (Y)	DRAWING - Power Plant Installation	3246001 and up	
1	26345-008	MUFFLER ASSY		2
2	85233-004	BODY ASSY - Left side		1
3	85233-010	BODY ASSY - Right side		1
4	85233-006	TUBE ASSY		2
5	85233-008	TUBE ASSY		2
6	24787-004	TAILPIPE - Left side		1
7	24787-005	TAILPIPE - Right side		1
8	24788-000	CLAMP ASSY		2
-8A	400-102	BOLT - (AN4-5)		2
-8B	404-101	NUT - (AN310-4)		2
-8C	424-051	COTTER PIN - (MS24665-132)		2
9	400-058	BOLT - (AN3-13)		6
-9A	690-612	WASHER - (NAS1149F0363P)		6
-9B	404-100	NUT - (AN310-3)		6
-9C	424-051	COTTER PIN - (MS24665-132)		6
10	487-437	SPRING		6
11	24791-000	CLAMP ASSY		2
-11A	400-103	BOLT - (AN4-6)		2
-11B	690-611	WASHER - (NAS1149F0463P)		2
-11C	404-101	NUT - (AN310-4)		2
-11D	424-051	COTTER PIN - (MS24665-132)		2
12	24793-002	STRAP - Right side, two places		
		Left side, one place (outboard)		3
13	24793-004	STRAP - Left side, one place (inboard)		1
14	400-059	BOLT - (AN3-14)		2
-14A	408-833	WASHER		2
-14B	82732-103	BUSHING		2
-14C	690-612	WASHER - (NAS1149F0363P)		2
-14D	404-100	NUT - (AN310-3)		2
-14E	424-051	COTTER PIN - (MS24665-132)		2
15	400-460	BOLT - (AN3-35A)		2
-15A	82732-102	BUSHING		2
-15B	24820-000	BUSHING - Rubber (453-713)		4
-15C	690-612	WASHER - (NAS1149F0363P)		2
-15D	404-156	NUT - (MS21083N3)		2
16	24862-026	SHROUD ASSY		2
17	63633-006	HOSE		1
18	63633-205	HOSE		1
19	63633-033	HOSE		1
20	554-992	CLAMP		4
21	554-772	CLAMP		6
22	554-859	CLAMP - (MS21919WH48)		3
-22A	411-533	SCREW - (MS35207-264)		2
-22B	690-609	WASHER - (NAS1149F0332P)		4
-22C	404-526	NUT - (MS21042-3)		3
23	85322-002	BRACKET		1
-23A	418-419	SCREW		1
-23B	408-051	WASHER - (MS35333-40)		1

-Item not illustrated

When ordering, always specify Part Number, Description, and Serial Number of Aircraft

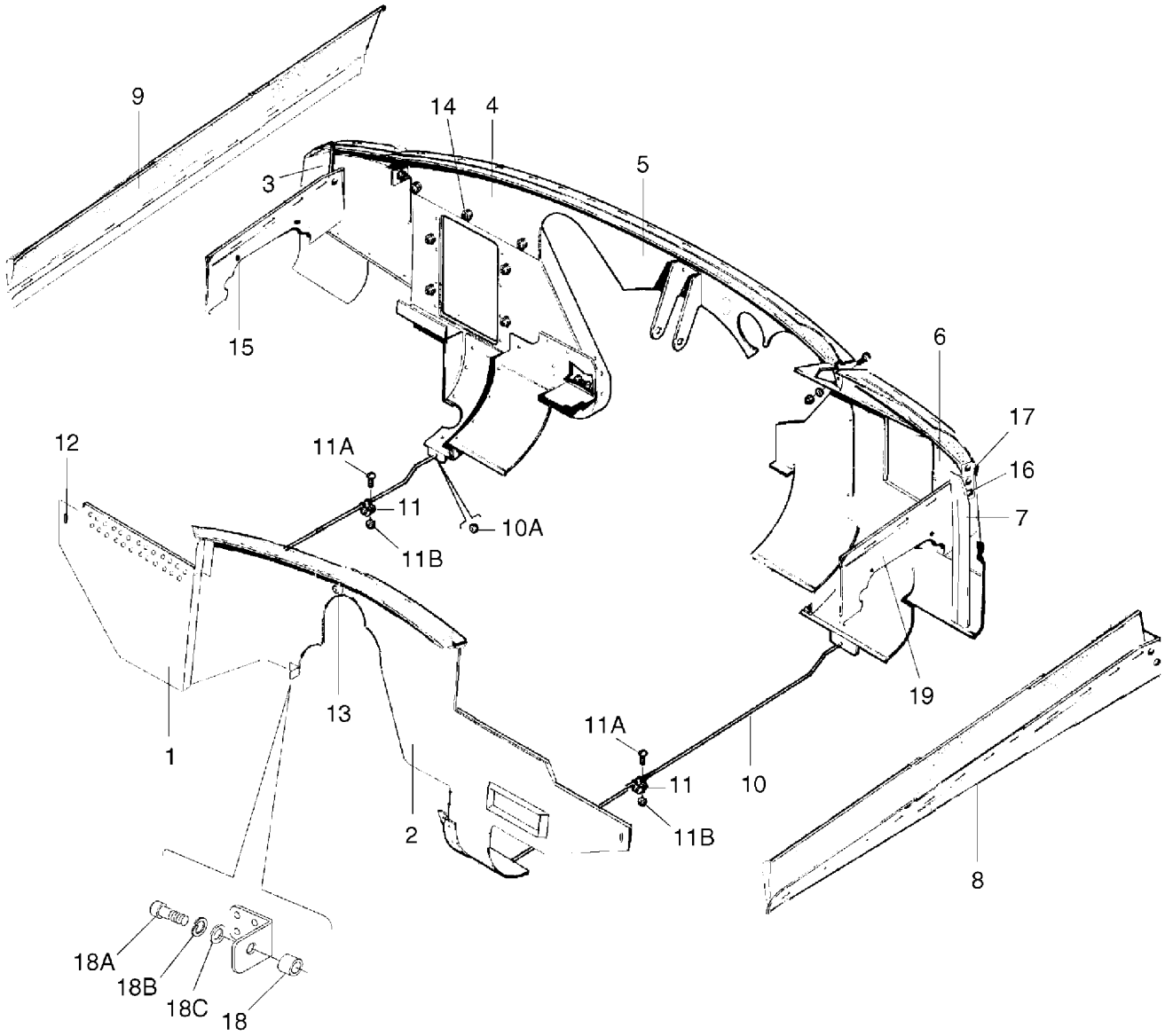

Figure 48. Engine Baffle Installation

FIGURE ITEM	PART NUMBER	NOMENCLATURE	EFFECT FROM TO	UNITS PER ASSY
48	85234 (Y)	DRAWING - Power Plant Installation	3246001 and up	
	85237 (Z)	DRAWING - Cowl Assy and Installation	3246001 and up	
	100920 (D)	DRAWING - Powerplant Installation	3257001 and up	
	100927 (G)	DRAWING - Cowl Assembly and Installation	3257001 and up	
1	85565-020	BAFFLE ASSY - Front, right		1
-1A	85565-016	. SEAL		1
2	85565-023	BAFFLE ASSY - Front, left (Refer to Piper Service Bulletin #1049 - Latest Revision for serial numbers 3246001 thru 3246183 and 3257001 thru 3257205)		1
-2A	85565-010	. SEAL		1
3	85598-003	BAFFLE ASSY - Rear		1
-3A	85598-009	. SEAL - Upper (curved)		1
-3B	85598-010	. SEAL - Lower		1
4	38737-002	BAFFLE ASSY - Rear, right	3246001 and up	1
4	38737-007	BAFFLE ASSY - Rear, right	3257001 and up	1
-4A	401-919	BOLT - (AN74A-4)		1
-4B	408-051	WASHER - (MS35333-40)		1
-4C	690-611	WASHER - (NAS1149F0463P)		1
5	38738-005	BAFFLE ASSY - Rear, center	3246001 thru 3246087	1
5	38738-008	BAFFLE ASSY - Rear, center (See items -20 through -22A for serial numbers 3257001 and up)	3246088 and up	1
-5A	68043-002	. SEAL		1
6	38739-002	BAFFLE ASSY - Rear, left	3246001 thru 3246087	1
6	38739-005	BAFFLE ASSY - Rear, left	3257001 and up	1
6	38739-012	BAFFLE ASSY - Rear, left	3246088 and up	1
-6A	68751-003	. SEAL		1
-6B	400-438	. BOLT - (AN3-4A)		2
-6C	690-612	. WASHER - (NAS1149FN363P)		2
7	85598-002	BAFFLE ASSY - Rear		1
-7A	85598-012	. SEAL - Upper (curved)		1
-7B	85598-014	. SEAL - Lower		1
8	85204-002	BAFFLE ASSY - Side, left (This baffle assy is part of the 85237-003, 85237-016 and 100927-003 lower cowl assemblies)		1
-8A	85204-006	. SEAL		1
9	85204-003	BAFFLE ASSY - Side, right (This baffle assy is part of the 85237-003, 85237-016 and 100927-003 lower cowl assemblies)		1
-9A	85204-006	. SEAL		1
10	65103-003	ROD - Baffle tie		2
10A	404-528	NUT - (1 on each end of rod)		4
-10B	405-450	NUT - (2 required 1 on either end between rod center and baffle)(MS35649-262)		4
-10C	104586-002	CLIP		1
-10D	690-616	WASHER - (NAS1149FN832P)		1
-10E	406-443	NUT - (NAS679A3W)		1
11	454-927	CLAMP		3
11A	411-531	SCREW - (MS35207-262)		3
11B	406-443	NUT - (NAS679A3W)		3
-11C	454-930	CLAMP		3
12	582-587	PLUG		2

-Item not illustrated

When ordering, always specify Part Number, Description, and Serial Number of Aircraft

FIGURE ITEM	PART NUMBER	NOMENCLATURE	EFFECT FROM TO	UNITS PER ASSY
48-				
-12A	411-531	SCREW - (MS35207-262)		2
-12B	408-044	WASHER - (MS35333-39)		2
-12C	690-612	WASHER - (NAS1149F0363P)		2
13	411-531	SCREW - (MS35207-262)		1
-13A	690-612	WASHER - (NAS1149F0363P)		2
-13B	404-526	NUT - (MS21042-3)		1
14	411-531	SCREW - (MS35207-262)		8
-14A	690-612	WASHER - (NAS1149F0363P)		8
-14B	404-526	NUT - (MS21042-3)		8
15	418-419	SCREW		4
-15A	408-051	WASHER		4
-15B	690-613	WASHER - (NAS1149F0432P)		4
16	411-544	SCREW - (MS35207-244)		3
-16A	690-616	WASHER - (NAS1149FN832P)		3
17	411-531	SCREW - (MS35207-262)		1
-17A	690-612	WASHER - (NAS1149F0363P)		1
-17B	406-443	NUT - (NAS679A3W)		1
18	467-045	INSERT		1
18A	411-532	SCREW - (MS35207-263)		1
18B	408-044	WASHER - (MS35333-39)		1
18C	690-612	WASHER - (NAS1149F0363P)		1
19	85598-005	BRACKET		1
-20	100941-002	BAFFLE ASSY - Right, rear	3257001 and up	1
-20A	688-437	. SEAL	3257001 and up	1
-21	100941-003	BAFFLE ASSY - Center, rear	3257001 and up	1
-21A	688-437	. SEAL	3257001 and up	1
-22	100941-004	BAFFLE ASSY - Left, rear	3257001 and up	1
-22A	688-437	. SEAL	3257001 and up	1

-Item not illustrated

When ordering, always specify Part Number, Description, and Serial Number of Aircraft

THIS PAGE INTENTIONALLY LEFT BLANK

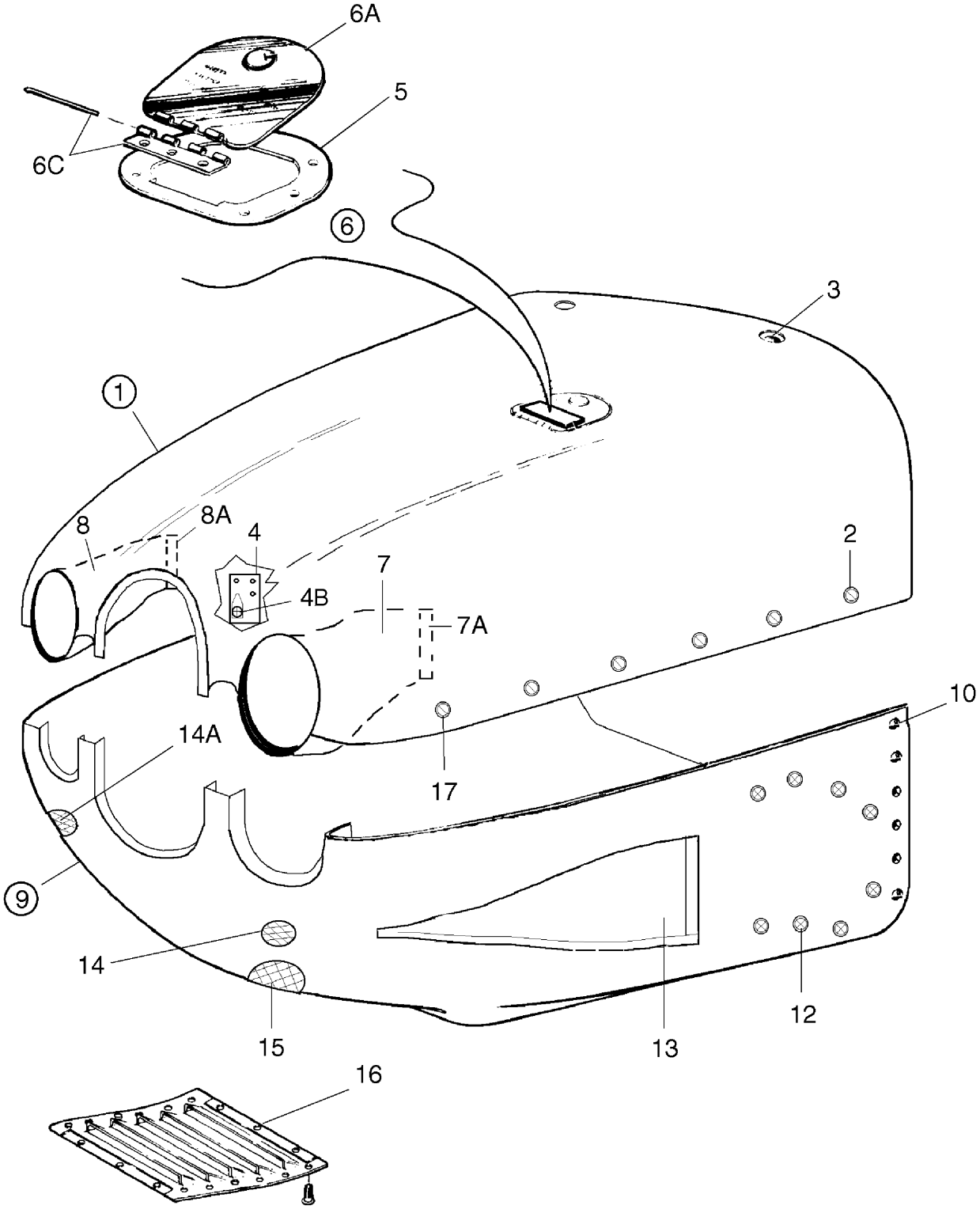

Figure 49. Engine Cowl Assembly

FIGURE ITEM	PART NUMBER	NOMENCLATURE	EFFECT FROM TO	UNITS PER ASSY
49	85237 (Z)	DRAWING - Cowl Assy and Installation	3246001 and up	
	100927 (G)	DRAWING - Cowl Assy and Installation	3257001 and up	
1	85237-004	COWL ASSY - Upper		1
-1A	85237-006	. COWL SHELL - Upper		1
2	487-684	. STUD		10
-2A	487-685	. STUD - (Alternate part for 487-684)		10
-2B	65061-002	. INSERT - Reinforcement plate		12
-2C	463-400	. GROMMET		10
-2D	484-755	. SNAP RING		10
-2E	85326-002	. INSERT		2
3	487-686	. STUD		2
-3A	487-687	. STUD - (Alternate part for 487-686)		2
-3B	65061-002	. INSERT - Reinforcement plate		2
-3C	463-400	. GROMMET		2
-3D	484-755	. SNAP RING		2
4	85238-017	. PLATE ASSY - Left		1
-4A	85238-015	. PLATE ASSY - Right		1
4B	410-039	. SCREW - (MS24694-S51)		2
-4C	494-037	. WASHER		2
5	99094-007	. PLATE ASSY - Oil filler door		1
6	99096-003	. DOOR ASSY - Oil filler		1
6A	99095-002	. . DOOR		1
-6B	472-017	. . LATCH - Oil filler door (KM610-32)		1
6C	65291-003	. . HINGE ASSY - Oil filler door		1
7	85202-010	. INLET ASSY - Left		1
7A	85202-005	. . SEAL		1
		(Order items under index number 7A as a group)		
-7B	85202-006	. . SEAL		1
		(Order items under index number 7A as a group)		
-7C	85202-007	. . RETAINER		1
		(Order items under index number 7A as a group)		
-7D	85202-008	. . RETAINER		1
		(Order items under index number 7A as a group)		
-7E	690-637	. . WASHER - (NAS1149FN316P)		9
8	85203-009	. INLET ASSY - Right		1
8A	85203-005	. . SEAL		1
		(Order items under index number 8A as a group)		
-8B	85203-006	. . SEAL		1
		(Order items under index number 8A as a group)		
-8C	85203-007	. . RETAINER		1
		(Order items under index number 8A as a group)		
-8D	85203-008	. . RETAINER		1
		(Order items under index number 8A as a group)		
-8E	690-637	. . WASHER - (NAS1149FN316P)		10
9	85237-003	COWL ASSY - Lower	3246001 thru 3246087	1
9	85237-016	COWL ASSY - Lower	3246088 and up	1
9	100927-003	COWL ASSY - Lower	3257001 and up	1
-9A	85237-005	. COWL SHELL - Lower	3246001 thru 3246087	1
-9A	85237-017	. COWL SHELL - Lower	3246088 and up	1
-9A	100927-005	. COWL SHELL - Lower	3257001 and up	1
-9B	85237-009	. HEAT SHIELD	3246001 and up	1
-9B	100927-016	. HEAT SHIELD	3257001 and up	1
-9C	85237-010	. HEAT SHIELD	3246001 and up	1

-Item not illustrated

When ordering, always specify Part Number, Description, and Serial Number of Aircraft

FIGURE ITEM	PART NUMBER	NOMENCLATURE	EFFECT FROM TO	UNITS PER ASSY
49-				
-9C	100927-017	. HEAT SHIELD	3257001 and up	1
-9D	38170-000	. PLATE		2
-9E	65061-000	. INSERT		6
10	85326-006	. INSERT - Reinforcement plate L.H.		1
-10A	85326-005	. INSERT - Reinforcement plate R.H.		1
12	410-039	. SCREW - (MS24694-551)		8
-12A	494-037	. WASHER		8
13	85236-002	. NACA DUCT	3246001 and up	1
14	85238-019	. INLET ASSY (Includes tubes and plate) (Installed on left side on serial numbers 3246001 thru 3246087)	3246001 thru 3246087	1
14	85238-025	. INLET ASSY (Installed on left side of serial numbers 3246088 and up, 3257001 and up)	3246088 and up 3257001 and up	1
14A	85238-021	. SCREEN		1
15	85238-010	. INLET ASSY (Includes tubes and plate)	3246001 and up	1
15	85238-022	. INLET ASSY	3257001 and up	1
-15A	85238-013	. SCREEN		1
16	100922-002	. LOUVER ASSY - Induction air	3257001 and up	1
17	410-039	SCREW - (MS24694-S51)		2
-17A	494-037	WASHER		2

-Item not illustrated

When ordering, always specify Part Number, Description, and Serial Number of Aircraft

THIS PAGE INTENTIONALLY LEFT BLANK

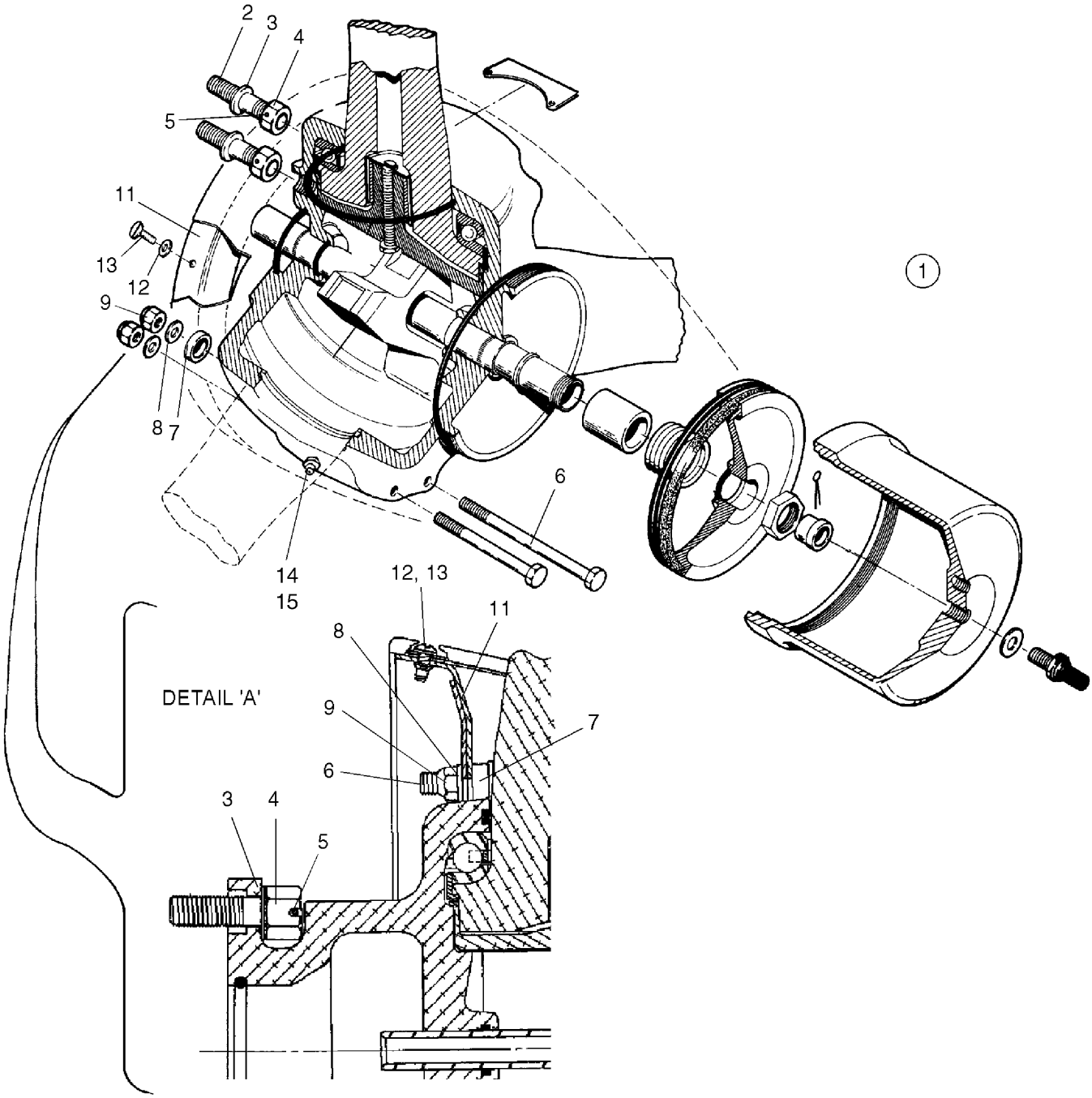

Figure 50. Three Blade Propeller Assembly (Hartzell)

FIGURE ITEM	PART NUMBER	NOMENCLATURE	EFFECT FROM TO	UNITS PER ASSY
50	85234 (Y)	DRAWING - Power Plant Installation		
1	551-037	PROPELLER - Hartzell, three blade		1
2	765-484	. STUD		6
3	763-728	. WASHER - (A1381)		6
4	752-530	. NUT - Castle (A-2069)		6
5	763-417	. PIN - Spring (B-3842-0750)		6
6	753-462	. BOLT - Hex head (A-2433)		6
7	756-284	. SPACER (A-2246-4)		6
8	690-629	. WASHER - (NAS1149F0363P)		6
9	755-651	. NUT - Flexlock (B3599)		6
11	758-563	. BULKHEAD UNIT (C-3576-1)		1
12	756-669	. WASHER - Fibre (A-1020)		18
13	417-694	. SCREW - (AN526C-1032R8)		18
14	754-909	. FITTING - Lubrication (A-279)		6
15	761-320	. LUBRICAP (57B6544)		6

-Item not illustrated

When ordering, always specify Part Number, Description, and Serial Number of Aircraft

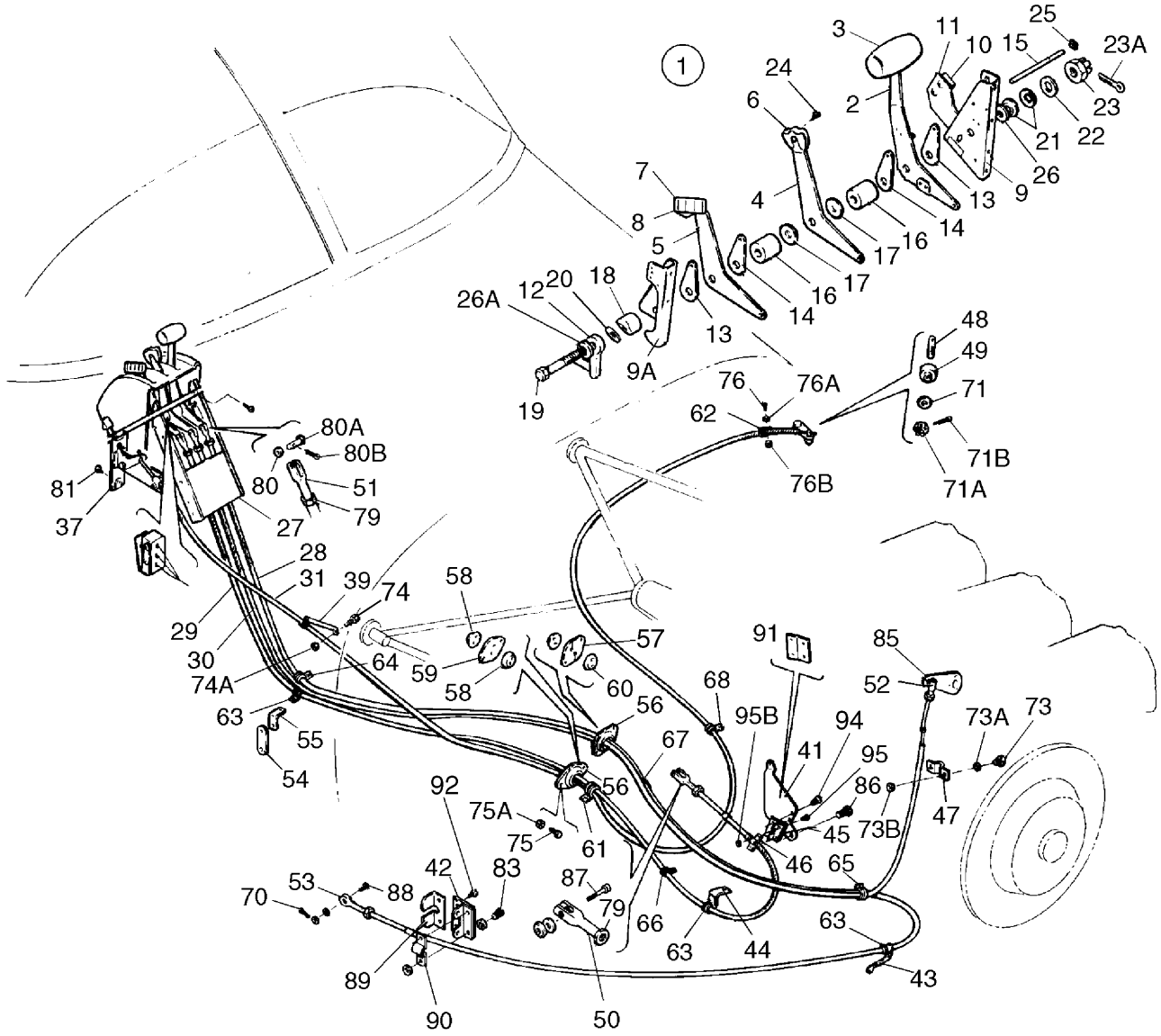

Figure 51. Engine Controls Installation

FIGURE ITEM	PART NUMBER	NOMENCLATURE	EFFECT FROM TO	UNITS PER ASSY
51	38090 (AA)	DRAWING - Engine Controls Installation	3246001 thru 3246087	
	100945 (R)	DRAWING - Engine Controls Installation	3246088 and up 3257001 and up	
1	38091-000	QUADRANT ASSY - Control		1
2	67223-004	. LEVER ASSY - Throttle		1
3	66979-000	. . KNOB - Throttle lever		1
4	69485-000	. LEVER - Propeller control		1
5	67214-000	. LEVER - Mixture control		1
6	24047-000	. KNOB - Propeller control		1
7	24048-000	. KNOB - Mixture control		1
8	79473-000	. PLATE - Mixture control		1
9	67215-003	. BRACKET ASSY - Quadrant, left		1
9A	67216-000	. BRACKET ASSY - Quadrant, right		1
10	38200-000	. SWITCH - Quadrant		1
11	38202-000	. BRACKET - Switch		1
12	63039-004	. HANDLE - Quadrant adjusting (2.94” L.)		1
13	67218-000	. PLATE - Quadrant control, friction		2
14	67218-002	. PLATE - Quadrant control, friction		2
15	69319-000	. PIN - Quadrant friction plate		1
16	68699-014	. SPACER - Quadrant control		2
17	62833-050	. WASHER		2
18	66774-000	. CAM - Quadrant control		1
-18A	414-490	. SCREW - (MS24693-S2)		2
19	400-184	. BOLT - (AN5-41)		1
20	62833-046	. WASHER		1
21	408-815	. WASHER (3502-18-04)		2
22	690-619	. WASHER - (NAS1149F0532P)		AR
22	690-628	. WASHER - (NAS1149F0563P)(Alternate part for 690-619)		AR
23	404-102	. NUT - (AN320-5)		1
23A	424-051	. COTTER PIN - (MS24665-132)		1
24	415-533	. SCREW - (MS35206-243)		2
25	406-345	. NUT - (A109-014-1)		2
26	690-628	. WASHER - (NAS1149F0563P)		1
26A	690-619	. WASHER - (NAS1149F0532P)		1
27	69324-005	MOUNT ASSY - Cockpit engine controls	3246001 thru 3246087 3246088 and up 3257001 and up	1
28	555-815	CONTROL CABLE ASSY - Throttle		1
-28A	454-929	CLAMP		2
-28B	554-845	CLAMP		2
-28C	411-532	SCREW - (MS35207-263)		2
-28D	404-526	NUT - (MS21042-3)		2
29	455-357	CONTROL CABLE ASSY - Mixture		1
30	554-350	CONTROL CABLE ASSY - Propeller		1
-30A	89808-003	SLEEVE	3257001 and up	1
31	653-658	CONTROL CABLE ASSY - Alternate air	3257001 and up	1
31	554-051	CONTROL CABLE ASSY - Alternate air	3246001 and up	1
-31A	38090-004	TUBING - Shrink		1
37	66855-004	CONTROL ASSY - Alternate air		1
39	69308-000	ARM - Alternate air cable		1
41	38084-003	BRACKET ASSY - Mixture control		1
42	37833-005	BRACKET ASSY - Adapter control cable	3246001 and up	1
42	100937-002	BRACKET	3257001 and up	1

-Item not illustrated

When ordering, always specify Part Number, Description, and Serial Number of Aircraft

FIGURE ITEM	PART NUMBER	NOMENCLATURE	EFFECT FROM TO	UNITS PER ASSY
51-				
43	63944-000	BRACKET - Mixture control	3246001 thru 3246087	1
-43A	411-531	SCREW - (MS35207-262)	3246001 thru 3246087	1
-43B	404-526	NUT - (MS21042-3)	3246001 thru 3246087	1
44	68911-000	CLIP - Control cable	3246001 and up	2
-44A	411-532	SCREW - (MS35207-262)	3246001 and up	1
-44B	404-526	NUT - (MS21042-3)	3246001 and up	1
45	69011-000	LUG - Control cable support bracket		1
46	69012-000	CLAMP - Control cable attachment		1
47	18219-002	CLAMP - Propeller control cable	3246001 thru 3246087	1
48	70371-003	STUD - Alternate air		1
49	70371-002	FITTING - Swivel, alternate air		1
50	554-757	CLEVIS - Control cable (MS35812-1)		1
51	488-327	TERMINAL - Clevis (AN665-21R)		3
52	89307-000	ROD END ASSY		1
-52A	484-529	. RETAINER		1
53	452-606	BEARING - Rod end, throttle control		1
54	38090-002	LINK - Clamp attachment		1
-54A	415-551	SCREW - (MS35206-261)		1
55	38090-003	ANGLE - Clip, clamp attachment		1
-55A	415-499	SCREW		1
56	66789-000	PLATE - Firewall seal (581-587)		4
57	68771-010	GASKET - Firewall seal, engine side		1
58	68770-006	GROMMET - Firewall seal (463-408)		2
59	68771-008	GASKET - Firewall seal, engine side		1
60	68770-012	GROMMET - Firewall seal (463-423)		2
61	454-932	CLAMP (left side of wheel well)	3246001 thru 3246087	2
61	454-930	CLAMP (left side of wheel well)	3246088 and up 3257001 and up	2
-61A	454-929	CLAMP (right side of wheel well)	3246001 thru 3246087	2
-61A	454-930	CLAMP (right side of wheel well)	3246088 and up 3257001 and up	
62	454-887	CLAMP		1
63	454-929	CLAMP		11
-63A	411-532	SCREW - (MS35207-263)		1
-63B	404-526	NUT - (MS21042-3)		1
64	454-930	CLAMP		2
65	454-813	CLAMP		3
66	454-935	CLAMP		1
-66A	454-929	CLAMP		1
-66B	411-532	SCREW - (MS35207-263)		1
-66C	404-526	NUT - (MS21042-3)		1
67	454-977	CLAMP	3246001 thru 3246087	1
68	454-868	CLAMP		1
70	424-095	COTTER PIN - (MS24665-151)		1
71	690-609	WASHER - (NAS1149F0332P)		1
71A	404-100	NUT - (AN310-3)	3246001 and up	1
71A	404-392	NUT - (AN320-3)	3257001 and up	1
71B	424-051	COTTER PIN		1
-72	DELETED			
73	411-515	SCREW - (MS35207-246)	3246001 thru 3246087	2
73A	690-616	WASHER - (NAS1149FN832P)	3246001 thru 3246087	2
73B	404-529	NUT - (MS21042-08)	3246001 thru 3246087	2
74	417-776	SCREW - (AN520-10R10)		1
74A	404-526	NUT - (MS21042-3)		1

-Item not illustrated

When ordering, always specify Part Number, Description, and Serial Number of Aircraft

FIGURE ITEM	PART NUMBER	NOMENCLATURE	EFFECT FROM TO	UNITS PER ASSY
51-				
75	415-535	SCREW - (MS35206-245)		4
75A	404-489	NUT - (MS21044N08)	3246088 and up 3257001 and up	4
75A	404-529	NUT - (MS21042-08)	3246001 thru 3246087	4
76	415-535	SCREW - (MS35206-245)	3246001 thru 3246087	1
76	415-533	SCREW - (MS35206-243)	3246088 and up	1
76	411-533	SCREW - (MS35207-264)	3257001 and up	1
76A	690-616	WASHER - (NAS1149FN832P)	3246001 thru 3246087	1
76A	404-531	WASHER - (MS21042-5)	3246088 and up	1
76A	408-100	WASHER - (MS35335-32)	3257001 and up	1
76B	404-529	NUT - (MS21042-08)	3246001 thru 3246087	1
79	404-224	NUT - (AN315-3R)		4
-79A	407-043	WASHER - Lock (MS35338-43)		4
80	690-609	WASHER - (NAS1149F0332P)		3
80A	524-145	PIN - (MS20392-2C11)		3
80B	424-051	COTTER PIN - (MS24665-132)		3
81	410-053	SCREW - (MS24694-C3)	3246001 thru 3246087	2
83	418-600	SCREW - (MS24677-24)	3246001 and up	2
83	415-536	SCREW - (MS35206-246)	3257001 and up	2
-83A	690-612	WASHER - (NAS1149F0363P)	3246001 and up	1
-83A	690-616	WASHER - (NAS1149FN832P)	3257001 and up	1
-83B	406-625	NUT - (NAS679A08W)	3257001 and up	1
-84	DELETED			
85	404-526	NUT - (MS21042-3)		1
-85A	690-612	WASHER - (NAS1149F0363P)		2
86	401-266	BOLT - (AN3-5A)		2
-86A	690-609	WASHER - (NAS1149F0332P)		2
87	400-673	BOLT - (AN23-11)	3246001 thru 3246087	1
87	400-674	BOLT - Clevis (AN23-12)	3246088 and up 3257001 and up	1
-87A	404-100	NUT - (AN310-3)	3246001 thru 3246087	1
-87A	603-314	NUT - (MS14144-13)	3246088 and up 3257001 and up	1
-87B	424-051	COTTER PIN - (MS24665-132)	3246001 and up 3257001 and up	1
-87C	690-609	WASHER - (NAS1149F0332P)	3246088 and up 3257001 and up	1
88	401-269	BOLT - (AN3-10A)		1
-88A	62833-101	WASHER		1
-88B	690-612	WASHER - (NAS1149F0363P)	3246001 thru 3246087	3
-88C	404-526	NUT - (MS21042-3)	3246001 thru 3246087	1
-88C	603-314	NUT - (MS14144-13)	3246088 and up 3257001 and up	2
-88D	690-609	WASHER - (NAS1149F0332P)	3246088 and up 3257001 and up	1
-88E	424-052	COTTER PIN - (MS24665-134)	3246088 and up 3257001 and up	2
89	69011-000	LUG - Control cable support bracket		1
90	18219-000	CLAMP - Control cable attachment	3246088 and up	1
90	69012-000	CLAMP	3257001 and up	1
91	37833-008	BRACKET - Control cable		1
92	410-241	SCREW - (MS24694-S6)		2
-92A	690-616	WASHER - (NAS1149FN832P)		6
-92B	404-489	NUT - (MS21044N08)	3246088 and up	2

-Item not illustrated

When ordering, always specify Part Number, Description, and Serial Number of Aircraft

FIGURE ITEM	PART NUMBER	NOMENCLATURE	EFFECT FROM TO	UNITS PER ASSY
51-				
-92B	404-529	NUT - (MS21042-08)	3246001 thru 3246087	2
94	690-612	WASHER - (NAS1149F0363P)		2
-94A	404-526	NUT - (MS21042-3)		2
95	416-787	SCREW - (MS35191-274)		2
-95A	690-609	WASHER - (NAS1149F0332P)		6
95B	404-526	NUT - (MS21042-3)		2

-Item not illustrated

When ordering, always specify Part Number, Description, and Serial Number of Aircraft

THIS PAGE INTENTIONALLY LEFT BLANK

GRIDS 1K8 THRU 1K24
INTENTIONALLY BLANK

SECTION VIII
FUEL SECTION GROUP

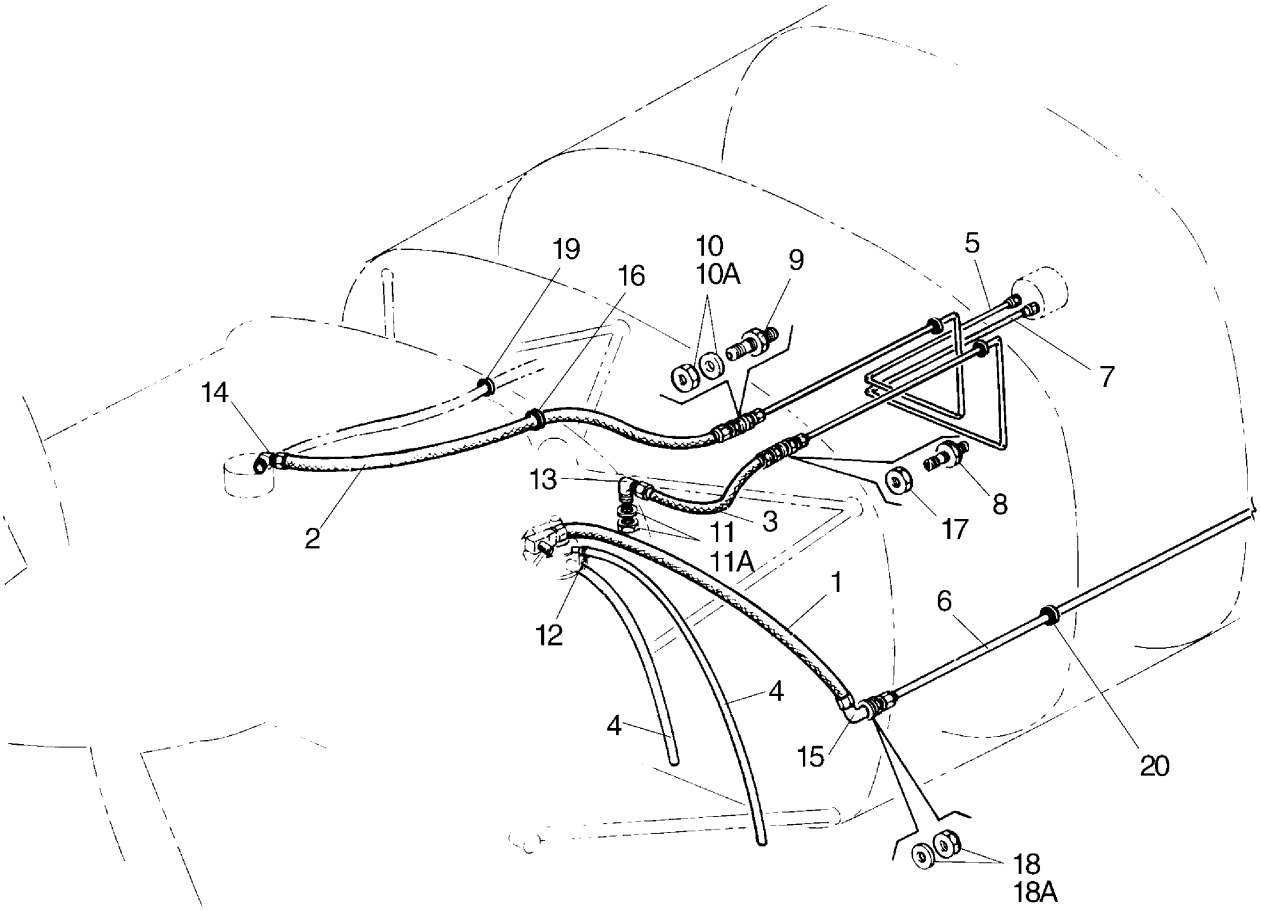

Figure 52. Forward Fuel System Installation

FIGURE ITEM	PART NUMBER	NOMENCLATURE	EFFECT FROM TO	UNITS PER ASSY
52	98531 (BL)	DRAWING - Fuel System Installation		
1	565-903	HOSE ASSY - Fuel supply (63901-126)	3246001 and up	1
-1A	566-326	HOSE ASSY - Fuel supply (63901-173)	3257001 and up	1
2	565-248	HOSE ASSY - Fuel flow pressure (63901-040)	3246001 thru 3246087	1
-2A	454-935	CLAMP	3246001 and up	1
-2B	454-868	CLAMP	3246001 thru 3246087	1
3	565-236	HOSE ASSY - Fuel flow vent (63901-033)	3246001 thru 3246087	1
-3A	454-930	CLAMP	3246001 thru 3246087	1
-3B	454-935	CLAMP	3246001 and up	1
4	63913-026	HOSE - Fuel pump drain	3246001 thru 3246087	2
4	63913-026	HOSE - Fuel pump drain	3246088 and up	1
4	77910-021	HOSE - Fuel pump drain	3257001 and up	1
-4A	458-940	ELBOW 45° - (AN844-4D)	3246001 thru 3246087	2
-4A	458-940	ELBOW 45° - (AN844-4D)	3257001 and up	1
-4A	458-940	ELBOW 45° - (AN844-4D)	3246088 and up	1
-4A	458-848	ELBOW 45° - (AN838-8)	3246088 and up	1
-4B	89716-002	TUBE ASSY - Fuel pump drain	3257001 and up	1
5	67700-420	TUBE ASSY - Fuel flow pressure	3246001 thru 3246087	1
6	67700-375	TUBE ASSY - Engine pump to electric pump		1
7	67700-421	TUBE ASSY - Fuel flow vent	3246001 thru 3246087	1
8	491-064	UNION - (AN832-2)	3246001 thru 3246087	1
9	491-065	UNION - (23319-000)	3246001 thru 3246087	1
10	477-628	NUT - (AN924-3)	3246001 thru 3246087	1
10A	690-629	WASHER - (NAS1149F0663P)	3246001 thru 3246087	1
11	477-619	NUT - (AN924-2D)	3246001 thru 3246087	1
11A	690-628	WASHER - (NAS1149F0563P)	3246001 thru 3246087	1
-11B	477-619	NUT - (ANA924-2D)	3246001 thru 3246087	1
12	454-983	CLAMP - (SAE-TYE-8)	3246001 thru 3246087	2
12	454-983	CLAMP - (SAE-TYE-8)	3246088 and up	1
12	554-575	CLAMP	3257001 and up	1
13	458-876	ELBOW - (AN833-2D)	3246001 thru 3246087	1
14	69464-000	ELBOW 90° - Restricted	3246001 thru 3246087	1
15	458-849	ELBOW 90° - (AN833-8)	3246001 and up	1
15	458-848	ELBOW 90° - (AN 837-8)	3257001 and up	1
16	434-172	GROMMET - (MS35489-19S)	3246001 thru 3246087	1
17	477-627	NUT - (AN924-2)	3246001 thru 3246087	
18	477-691	NUT - (AN924-8)		1
18A	690-635	WASHER - (NAS1149F1290P)		5
19	434-137	GROMMET - (MS35489-15)	3246001 thru 3246087	5
19	434-137	GROMMET - (MS35489-15)	3257001 and up	4
19	434-137	GROMMET - (MS35489-15)	3246088 and up	4
20	434-138	GROMMET - (MS35489-17)		1

-Item not illustrated

When ordering, always specify Part Number, Description, and Serial Number of Aircraft

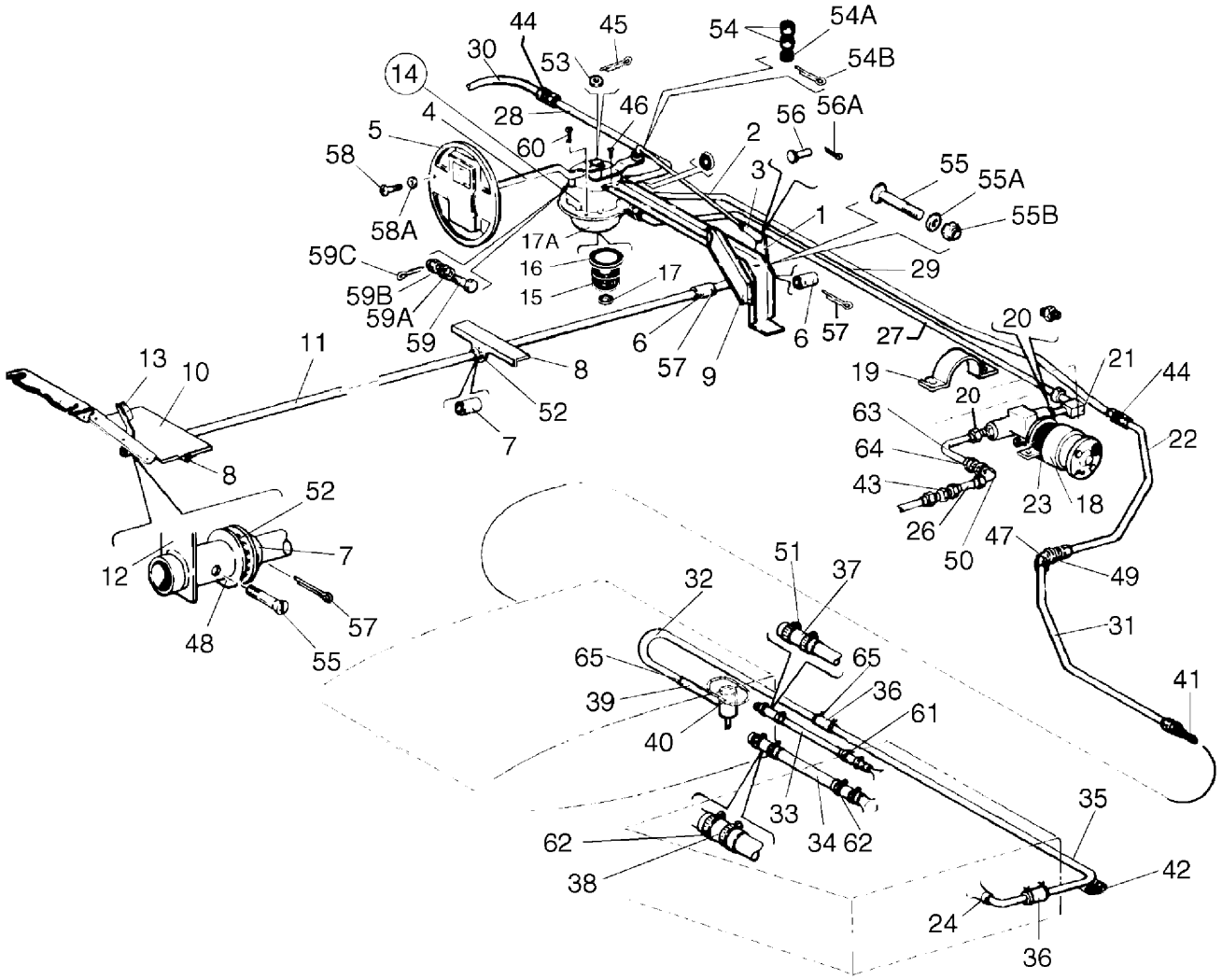

Figure 53. Aft Fuel System Installation

FIGURE ITEM	PART NUMBER	NOMENCLATURE	EFFECT FROM TO	UNITS PER ASSY
53	98531 (BL)	DRAWING - Fuel System Installation		
	38142 (M)	DRAWING - Fuel Selector Valve Installation		
1	69092-002	ARM ASSY - Fuel selector control		1
2	65407-007	ROD ASSY - Fuel selector control		1
3	454-905	. CLEVIS - (MS35812-1)		1
4	38154-000	HANDLE - Quick drain		1
5	65461-019	COVER ASSY - Quick drain (When ordering, specify color)		1
6	63904-030	HOSE - Plastic		2
7	63904-022	HOSE - Plastic		2
8	65400-002	ANGLE - Fuel selector control		2
-8A	415-535	SCREW - (MS35206-245)		2
-8B	419-923	SCREW - Sheet metal (8 x 1/2)		4
9	69094-004	BRACE ASSY - Fuel selector control		1
10	69489-000	PLATE - Tunnel		1
11	69093-002	TUBE - Torque, fuel selector control		1
12	69088-005	LEVER ASSY - Fuel selector control		1
13	69181-000	. KNOB		1
14	69735-005	VALVE ASSY - Fuel selector		1
15	754-816	. FILTER ASSY - Fuel selector valve		1
16	762-503	. O-RING		1
17	755-919	. O-RING		1
17A	758-534	. BOWL - Fuel filter		1
18	481-708	PUMP - Electric fuel, 14 volt	3246001 thru 3246017	1
18	481-900	PUMP - Electric fuel, 28 volt	3246018 and up	1
18	461-750	PUMP - Electric fuel, 28 volt	3257001 and up	1
19	69032-000	STRAP - Electric fuel pump	3246001 and up	2
-19A	411-531	SCREW - (MS35207-262)	3246001 and up	2
-19B	690-609	WASHER - (NAS1149F0332P)		2
-19C	404-526	NUT - (MS21042-3)		3
20	484-078	ADAPTER	3246001 and up	2
20	551-846	ADAPTER	3257001 and up	2
21	454-849	ELBOW - (AN833-8)	3246001 and up	1
21	458-848	ELBOW - (AN837-8)	3257001 and up	1
-21A	690-635	WASHER - (NAS1149F1290P)		1
-21B	477-691	NUT - (AN924-8)		1
22	67700-177	TUBE ASSY - Fuel selector to inboard fuel tank		1
23	189-732	TAPE - (1/8 x 1) 9″	3246001 and up	1
24	37794-002	VALVE ASSY - Check		2
26	67700-368	TUBE ASSY - Electric fuel pump		1
27	67700-402	TUBE ASSY - Pump to fuel valve	3246001 and up	1
27	67700-427	TUBE ASSY - Pump to fuel valve	3257001 and up	1
28	67700-100	TUBE ASSY - Fuel selector valve		1
29	67700-401	TUBE ASSY - Fuel selector valve		1
30	67700-096	TUBE ASSY - Fuel selector to inboard fuel tank, right		2
31	67700-363	TUBE ASSY - Inboard fuel tank		2
32	67700-312	TUBE ASSY - Fuel vent		2
-32A	454-933	CLAMP		4
-32B	690-618	WASHER - (NAS1149FN816P)		4
-32C	404-529	NUT - (MS21042-08)		4
-32D	95061-132	BUSHING		6
-32E	415-540	SCREW - (MS35206-250)		6
-32F	454-932	CLAMP		2
33	67700-314	TUBE ASSY - Interconnect ground (3/4” diameter)		2

-Item not illustrated

When ordering, always specify Part Number, Description, and Serial Number of Aircraft

FIGURE ITEM	PART NUMBER	NOMENCLATURE	EFFECT FROM TO	UNITS PER ASSY
53-				
34	67700-315	TUBE ASSY - Interconnect ground (2” diameter)		2
35	67700-337	TUBE - Outboard fuel tank		2
-35A	454-933	CLAMP		AR
-35B	411-531	SCREW - (MS35207-262)		2
-35C	406-707	U-NUT		2
36	63913-140	HOSE - Connector		4
37	63913-093	HOSE - Connector		2
38	63913-092	HOSE - Connector		2
39	63913-188	HOSE - Fuel vent		2
40	38552-002	VENT ASSY - Fuel		2
-40A	415-544	SCREW - (MS35206-244)		8
41	68763-000	STRAINER ASSY - Fuel		2
42	63186-003	MOULDING - Extruded		4
43	551-846	ADAPTER - (MS21900W8)	3246001 and up	1
43	551-846	ADAPTER - (MS21900W8)	3257001 and up	2
-43A	477-860	UNION, NUT - (MS219218W)		1
-43B	486-976	SLEEVE - (MS21922-8)		1
44	491-053	UNION - (AN815-8D)		2
45	424-058	COTTER PIN - (MS24665-281)		1
46	416-098	SCREW - (MS35265-45)		2
-46A	690-616	WASHER - (NAS1149FN832P)		2
-46B	404-529	NUT - (MS21042-08)		2
47	458-914	ELBOW - (AN837-8D)	3257001 and up	2
-47A	690-635	WASHER - (NAS1149F1290P)		2
48	690-632	WASHER - (NAS1149F0963P)		2
49	477-621	NUT - (AN924-8D)		2
-49A	690-635	WASHER - (NAS1149F1290P)		2
50	458-905	ELBOW - (AN833-8D)	3246001 and up	1
51	554-639	CLAMP - (SAE-TY-F12)		4
52	63976-023	GROMMET		2
53	62833-036	WASHER - Fuel selector valve stem		1
54	62833-011	WASHER - Rod assy		2
54A	690-609	WASHER - (NAS1149F0332P)		1
54B	424-051	COTTER PIN - (MS24665-132)		1
55	410-046	SCREW - (MS24694-S59)		2
55A	690-612	WASHER - (NAS1149FN363P)		2
55B	404-526	NUT - (MS21042-3)		2
56	424-175	PIN - (MS20392-2C13)		1
56A	424-051	COTTER PIN - (MS24665-132)		2
57	424-053	COTTER PIN - (MS24665-136)		3
58	419-713	SCREW		2
58A	494-004	WASHER		2
59	400-053	BOLT - (AN3-6)		1
59A	690-609	WASHER - (NAS1149F0332P)		2
59B	404-392	NUT - (AN320-3)		1
59C	424-052	COTTER PIN - (MS24665-134)		1
60	416-098	SCREW - (MS35265-45)		4
61	654-049	CLAMP		2
62	654-047	CLAMP - (#9432)		6
63	67700-369	TUBE ASSY - Electric fuel pump	3246001 and up	1
63	67700-428	TUBE ASSY - Electric fuel pump	3257001 and up	1
-63A	63904-114	TUBE - Vinyl	3257001 and up	1
64	477-621	NUT - (AN924-8D)		1
-64A	690-635	WASHER - (NAS1149F1290P)		1
65	554-793	CLAMP		12

-Item not illustrated

When ordering, always specify Part Number, Description, and Serial Number of Aircraft

THIS PAGE INTENTIONALLY LEFT BLANK

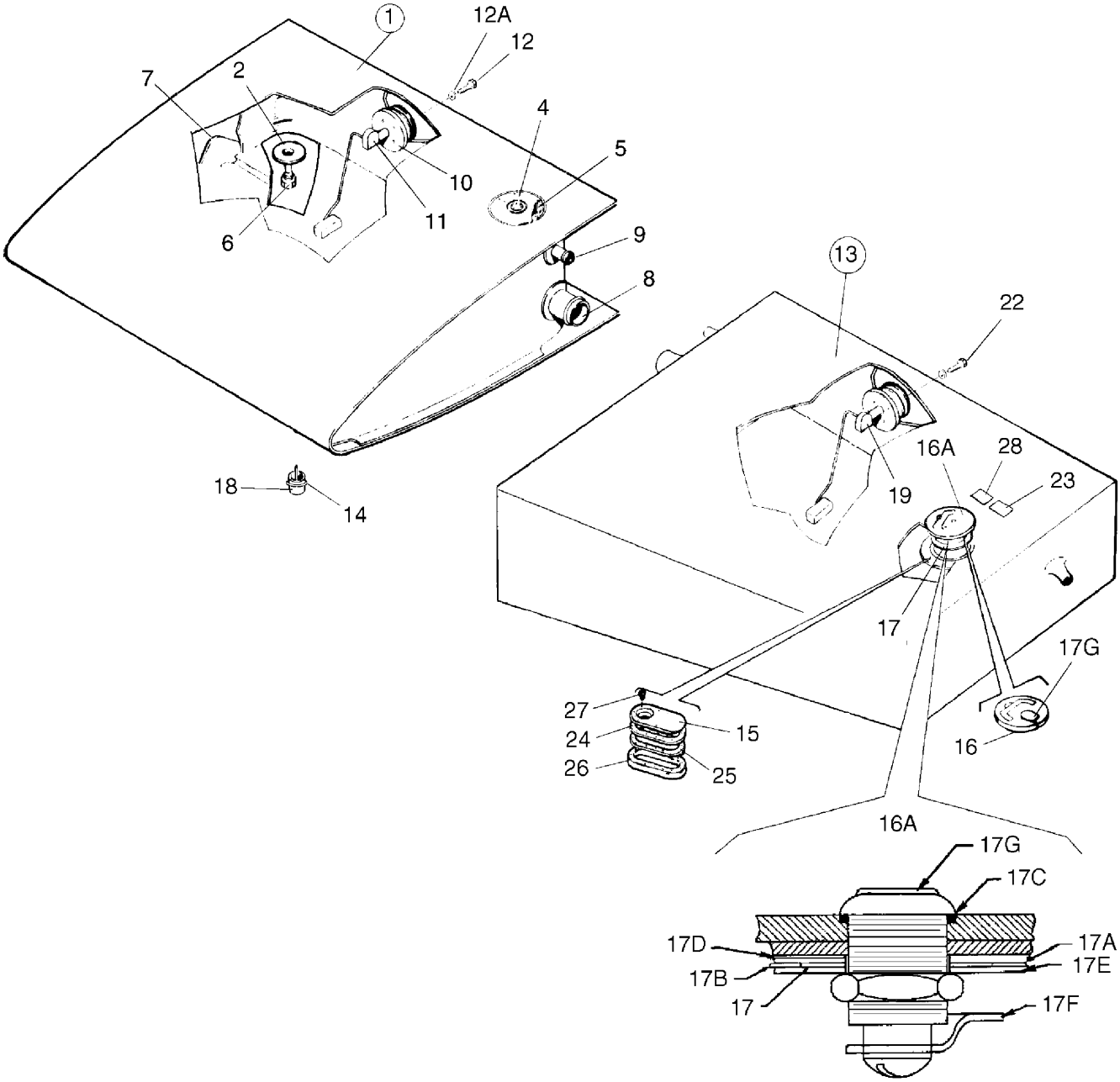

Figure 54. Fuel Tank Assemblies

FIGURE ITEM	PART NUMBER	NOMENCLATURE	EFFECT FROM TO	UNITS PER ASSY
54	38500 (BP)	DRAWING - Wing Installation		
	98531 (BS)	DRAWING - Fuel System Installation		
1	38488-008	TANK ASSY - Fuel, inboard, left		1
-1A	38488-009	TANK ASSY - Fuel, inboard, right		1
2	62033-000	. PLATE - Drain		1
-3	38517-002	. FUEL GAUGE INSTALLATION		
4	38517-003	. . GAUGE ASSY - Fuel tank		1
5	38230-004	. . GASKET - Fuel gauge		1
6	491-806	. DRAIN - Fuel, valve (F391-1878)		1
7	96871-000	. OUTLET ASSY - Fuel tank, left		1
-7A	96871-001	. OUTLET ASSY - Fuel tank, right		1
8	37745-002	. FITTING ASSY - Tank interconnect		1
9	96288-000	. TUBE ASSY - Fuel tank vent		1
10	62044-000	. PLATE - Fuel tank		1
11	486-466	. SENDER - Fuel, left, inboard		1
-11A	486-467	. SENDER - Fuel, right, inboard		1
12	401-266	. BOLT - (AN3-5A)		5
12A	690-612	. WASHER - Spring (NAS1149FN363P)		5
-12B	407-043	. WASHER - (MS35338-43)		5
13	461-711	BLADDER ASSY - Fuel, outboard, left		1
-13A	461-710	BLADDER ASSY - Fuel, outboard, right		1
14	62923-000	PLACARD - Fuel check bottle (See figure 81)		RF
15	38592-006	NECK ASSY - Filler		2
16	654-557	CAP ASSY - Fuel tank (non-locking)		2
16A	39824-002	CAP ASSY - Fuel tank (with locks)	3246001 thru 3246017	1
16A	39824-003	CAP ASSY KIT - Fuel tank (with locks) (Kit includes (2) cap assemblies with matching locks)	3246018 and up 3257001 and up	1
17	66814-002	. GASKET - Fuel cap (Used with Fuel Tank Cap Assembly P/N 38599-02 only)		1
17A	39822-002	. GASKET - Fuel cap (Used with Fuel Tank Cap Assembly P/N 39824-02 and Fuel Tank Cap Assembly Kit P/N 39824-800 only)		1
17B	66815-000	. GASKET - Fuel cap (462-056)		1
17C	485-048	. O-RING - (MS28775-18)(Used with Fuel Tank Cap Assembly P/N 39824-002 and Fuel Tank Cap Assembly Kit P/N 39824-003 only)		1
17D	39821-002	. SPRING - (Used with Fuel Tank Cap Assembly P/N 39824-002 and Fuel Tank Cap Assembly Kit P/N 39824-003 only)		1
17E	39820-002	. LOCK - (Used with Fuel Tank Cap Assembly P/N 39824-002 and Fuel Tank Cap Assembly Kit P/N 39824-003 only)		1
17F	39855-005	. PAWL ASSY - (Used with Fuel Tank Cap Assembly P/N 39824-002 only)		1
17G	39856-002	. LOCK ASSY - Fuel cap, key (Used with Fuel Tank Cap Assembly P/N 39824-002 only)		1
-17H	39822-003	. GASKET - Fuel cap (Used with Fuel Tank Cap Assembly P/N 39824-002 and Fuel Tank Cap Assembly Kit P/N 39824-003 only)		1
18	67728-000	SAMPLER - Fuel		1
19	486-468	SENDER - Fuel, left, outboard (Refer to Piper Service Letter #1032 - Latest Revision for serial numbers 3246088 thru 3246176 and 3257001 thru 3257183)	3246001 thru 3246087	1

-Item not illustrated

When ordering, always specify Part Number, Description, and Serial Number of Aircraft

FIGURE ITEM	PART NUMBER	NOMENCLATURE	EFFECT FROM TO	UNITS PER ASSY
54-				
19	686-202	SENDER - Fuel, left, outboard (Refer to Piper Service Letter #1032 - Latest Revision for serial numbers 3246088 thru 3246176 and 3257001 thru 3257183)	3246088 thru 3246176 3257001 thru 3257183	1
-19A	486-469	SENDER - Fuel, right, outboard (Refer to Piper Service Letter #1032 - Latest Revision for serial numbers 3246088 thru 3246176 and 3257001 thru 3257183	3246001 thru 3246087	1
-19A	686-203	SENDER - Fuel, right, outboard (Refer to Piper Service Letter #1032 - Latest Revision for serial numbers 3246088 thru 3246176 and 3257001 thru 3257183)	3246088 thru 3246176 3257001 thru 3257183	1
-19B	690-660	WASHER - Lock (MS35335-30)		2
-19C	415-515	SCREW - (MS35206-225)		2
22	400-440	BOLT - (AN3-6A)		5
-22A	407-043	WASHER - (MS35338-43)		10
-22B	690-612	WASHER - (NAS1149FN363P)		10
23	456-682	PLACARD - Aviation fuel, grade (See figure 81)		RF
24	38596-005	GASKET - Filler neck, upper (cork)		2
25	38596-005	GASKET - Filler neck, lower (cork)		2
26	38619-004	RING NUT ASSY - Fuel tank access		2
27	410-066	SCREW - (MS24694-C52)		12
28	456-682	DECAL - Avgas (See figure 81)		RF

-Item not illustrated

When ordering, always specify Part Number, Description, and Serial Number of Aircraft

THIS PAGE INTENTIONALLY LEFT BLANK

GRIDS 1L12 THRU 1L24
INTENTIONALLY BLANK

Piper™

Freedom of flight

™ The New Piper Aircraft, Inc.

AIRPLANE PARTS CATALOG

SARATOGA II HP

PA-32R-301
(SERIAL NUMBERS 3246001 AND UP)

SARATOGA II TC

PA-32R-301T
(SERIAL NUMBERS 3257001 AND UP)

CARD 2 OF 2

THE NEW PIPER AIRCRAFT, INC.

PART NUMBER: 761-880

REISSUED: JULY 10, 2004

Published by
Technical Publications

©The New Piper Aircraft, Inc.
2926 Piper Drive
Vero Beach, Florida 32960
U.S.A.

Member
General Aviation
Manufacturers Association

AEROFICHE EXPLANATION AND REVISION STATUS

The Parts Catalog information in this set of Aerofiche cards is arranged in accordance with general specifications of Aerofiche adopted by the General Aviation Manufacturer's Association.

Conversion of Aerofiche alpha/numeric code numbers:
First number is the Aerofiche card identifier.
Letter is the horizontal line reference per card.
Second number is the vertical line reference per card.
Example: 2J16 = Aerofiche card number two of given set, Grid location J16.

REVISIONS

The information compiled in this Aerofiche Parts Catalog is kept current by revisions distributed periodically. Each revision is a complete Aerofiche card replacement and supersedes Aerofiche cards of the same number in the set.

Revisions to this PA-32R-301 (serial numbers 3246001 and up) and PA-32R-301T (serial numbers 3257001 and up) Parts Catalog issued July 12, 1995 and reissued July 10, 2004 are as follows:

Effectivity	Publication Date	Aerofiche Card Effectivity
ORG 950712	April 22, 1996	1 and 2
PR 970627	June 27, 1997	1 and 2
PR 970801	August 1, 1997	1 and 2
PR 980331	March 31, 1998	1 and 2
PR 990601	June 1, 1999	1 and 2
PR 030310	March 10, 2003	1 and 2
CR 040710*	July 10, 2004	1 and 2

THIS PAGE INTENTIONALLY LEFT BLANK

INTRODUCTION

This illustrated Parts Catalog provides simple, positive identification of replacement parts for Model PA-32R-301 Saratoga II HP (serial numbers 3246001 and up) and the Model PA-32R-301T Saratoga II TC (serial numbers 3257001 and up), manufactured by the The New Piper Aircraft, Inc. of Vero Beach, Florida.

NOTE: DO NOT USE THIS CATALOG FOR RIGGING AND INSTALLATION PURPOSES.

1. The catalog is divided into fourteen major sections as follows:
   a. Section I to XIII inclusive contains all replacement parts for the complete airplane. Each section is subdivided and each division includes an illustration and a parts listing.
   b. Section XIV is the Miscellaneous Group. This group includes an illustration and parts list for the Placards and Exterior Stencils and a listing of the Optional Equipment Kits, Repair Kits and Special Tools.

2. The following is a brief explanation of the columns in the parts lists: (Refer to EXAMPLE below).
   a. The FIGURE AND ITEM NUMBER column indicates the illustration figure number and its part index number.
      EXAMPLE: (2-1), the 2 is the figure number and the 1 is the index number. The figure number appears only at the top of each parts list page.
   b. The PART NUMBER column contains the identifying number of the replacement part and this number must be shown on all parts orders.
   c. The NOMENCLATURE column indicates the part name. This name must be shown on all parts orders.
   d. The UNITS PER ASSY. (Number Required) column represents the total quantity of parts used per figure when the part is not indented and the quantity of parts used per assembly when the part is indented. The symbol AR listed in this column means As Required.
   e. The EFFECT FROM TO column indicates the part application by airplane serial number.

EXAMPLE

FIGURE ITEM	PART NUMBER	NOMENCLATURE	EFFECT TO FROM	UNITS PER ASSY
2 1	XXXXX-XXX	DOOR ASSEMBLY - Baggage compartment	XXXXXXX and up	X
2	XXXXX-XXX	. TUBE ASSEMBLY - Baggage door latch		X
3	XXXXX-XXX	. . CLEVIS - Door latch tube assembly		X
4	XXXXX-XXX	. . CLIP - Door latch tube assembly		X

In the nomenclature column, the next higher assembly relationship of items covered is shown by the degree of indention of each item and is indicated by an asterisk (*). One asterisk signifies one indention, two signifies two indentions, etc. The example listing above is interpreted as follows:

If the DOOR ASSEMBLY (not indented) is ordered, it will include the three items indented under the DOOR ASSEMBLY.

If the TUBE ASSEMBLY (indented one space) is ordered, it will include the two items indented under the TUBE ASSEMBLY.

If you want only a CLEVIS or CLIP, you order only that item.

3. Piper Aircraft will supply all attaching parts to its customers in any quantity. When purchasing the attaching parts such as nuts, bolts, washers, cotter pins, etc. from Piper Aircraft the customer or service center need only order the part(s) needed.
4. All items of Optional Equipment are contained in the parts list in their proper sequence and sections. These items were not marked optional, since they are fully identified by their descriptions.

HOW TO IDENTIFY A PART IF YOU KNOW WHAT IT LOOKS LIKE AND KNOW WHERE IT IS LOCATED

1. Refer to Figure 1 to determine the section number in which the part is used.
2. Refer to the Table of Contents and locate the section. Note the figure numbers that illustrate the various subgroups of this main section. Select the figure title you think might contain the part you wish to identify and proceed to the grid (page) specified. If you don't find the part on this illustration, try another figure in this group.
3. Refer to Figure and Index Number in the parts listing for description of the part.

HOW TO ORDER PARTS

When ordering parts for your Piper airplanes, please observe the following instructions:

1. Place your order with your local distributor or service center.
2. Specify the model and serial number of your airplane.
3. Specify Part Number, Name, Type and Quantity Required.
4. Specify the method of shipment — freight, express, parcel post, air express, air freight or air parcel post. Where the nature of the shipment requires it or when no instructions are given, we reserve the right to ship the most suitable way.
5. Request price and delivery information prior to order placement.

GENERAL INFORMATION

1. Shortages
   All orders are checked before leaving our Shipping Department. A packing slip is enclosed with the shipment. Claims for errors or shortages must be made within three days after receipt of orders.

2. Returned Goods
   No material should be returned without first securing written permission. Material sent in without notice will be held at the owner's risk for thirty days and will then be disposed of as we see fit. Transportation charges must be prepaid on returned goods or the shipment will be refused.

3. Transportation Liabilities
   The New Piper Aircraft, Inc. cannot be held liable for damages to parts in transit from the factory. If a shipment is received in a damaged condition, have the delivery man or transportation company make a notation of the damage and file your claim with the carrier. In case of concealed damage, do not attempt to remove the part from the shipping container, or try to repair the damage, call the carrier and have their claim agent inspect the damage before filing your claim with the carrier.

MODEL SERIAL NUMBER INFORMATION

The serial numbers of PA-32R-301 Saratoga II HP aircraft covered by this Parts Catalog are as follows:

MODEL YEAR	1995	3246001 thru 3246017
MODEL YEAR	1996	3246018 thru 3246059
MODEL YEAR	1997	3246060 thru 3246087
MODEL YEAR	1998	3246088 thru 3246125
MODEL YEAR	1999	3246126 thru 3246153
MODEL YEAR	2000	3246154 thru 3246165
MODEL YEAR	2000	3246166 thru 3246181
MODEL YEAR	2001	3246182 thru 3246203
MODEL YEAR	2002	3246204 thru 3246209
MODEL YEAR	2003	3246210 thru 3246217
MODEL YEAR	2004	3246218 and up

The serial numbers of PA-32R-301T Saratoga II TC aircraft covered by this Parts Catalog are as follows:

MODEL YEAR	1997	3257001 thru 3257027
MODEL YEAR	1998	3257028 thru 3257075
MODEL YEAR	1999	3257076 thru 3257123
MODEL YEAR	2000	3257124 thru 3257143
MODEL YEAR	2000	3257145 thru 3257155
MODEL YEAR	2000.5	3257144 thru 3257144
MODEL YEAR	2000.5	3257156 thru 3257198
MODEL YEAR	2001	3257199 thru 3257266
MODEL YEAR	2002	3257267 thru 3257296
MODEL YEAR	2003	3257297 thru 3257338
MODEL YEAR	2004	3257339 and up

SERIAL NUMBER EXPLANATION

The serial number on the Manufacturer's Identification Plate is based on a 3 set numbering system. See example below.

EXAMPLE

32 46 001

TYPE CERTIFICATE DESIGNATION

MODEL SEQUENCE NUMBER

MODEL CODE

46 = PA-32R-301 SARATOGA II HP
57 = PA-32R-301T SARATOGA II TC

STANDARD PAINT CHART

	MFG. NO.	PIPER PART NUMBER QUART	GALLON
EXTERIOR			
POLYURETHANE ENAMEL (Dupont Imron)			
Baja Yellow	H7850U	4175 461	1175 461
Juneau White	H7848U	4175 462	1175 462
Ocala Orange	H7857UM	4175 463	1175 463
Madrid Red	H7851UM	4175 464	1175 464
Bahama Blue	H7853U	4175 465	1175 465
Avocado	H7852U	4175 466	1175 466
Las Vegas Gold	5242U	4176 121	1176 121
Dakota Black	99U	4175 467	1175 467
Denver Brown	H7859U	4176 122	1176 122
Matador Red	H7858U	4175 468	1175 468
Royal Blue	H7856U	4175 469	1175 469
Hickory Brown	H7855U	4175 470	1175 470
Silver	4531U	4176 123	1176 123
Lime Green	H7854U	4175 460	1175 460
Sage Green	K7887U	4176 132	1176 132
Firethorn	K7888UW	4176 133	1176 133
Buckskin	K7890U	4176 135	1176 135
Dark Blue	K7891U	4176 136	1176 136
Platinum Gray	N7819U	4176 126	1176 126
Sandalwood Tan	N7818U	4176 127	1176 127
Dark Claret	K7886U	4176 131	1176 131
Burnished Gold	N8068U	4763 528	1763 528
Light Blue	K8149U	4763 529	1763 529
Dark Saddle	N8070U	4763 530	1763 530
Dark Green	N8071U	4763 531	1763 531
Saffron	K7889UH	4763 532	1763 532
Light Sandalwood	W8275	4763 533	1763 533
Light Platinum	W8274	4763 534	1763 534
Catalyst (Activator)	912S	4179 950	1179 950
Reducer	Y8485S	4179 145	1179 145
Retarder	8100S	4179 599	1179 599
Accelerator	189S	4179 951	
POLYURETHANE PRIMER (Dupont Imron)			
Wash Primer	B9287	4170 766	1179 766
Wash Primer Thinner	K1733	4179 452	1179 452
Acid Thinner	B9289	4179 403	1179 403
INTERIOR			
INSTRUMENT PANEL			
Cadet Dark Grey			170 902
Grey II			170 907

NOTE: SEE SERVICE SPARES LETTER 407 FOR AVAILABILITY OF COLOR PAINT FOR THERMOPLASTIC INTERIOR PANELS.

TABLE OF CONTENTS

FIGURE NUMBER	FIGURE TITLE	GRID NUMBER
1	Complete Airplane	1A12, 2A12
	SECTION I WING GROUP	
2	Wing Installation.	1A16
3	Wing Leading Edge Assembly	1A22
4	Wing Trailing Edge Assembly	1B2
5	Aileron Assembly	1B6
6	Flap Assembly	1B10
	SECTION II FUSELAGE GROUP	
7	Fuselage Assembly - Complete	1B14
8	Fuselage Upper Forward Cockpit Assembly	1B18
9	Fuselage Upper Center Cockpit Assembly	1B22
10	Fuselage Upper Aft Cockpit Assembly	1C2
11	Fuselage Lower Forward Cockpit Assembly	1C4
12	Fuselage Lower Aft Cockpit Assembly	1C8
13	Fuselage Aft Section	1C12
14	Fuselage Forward Cabin Door	1C16
15	Fuselage Aft Cabin Door	1C20
16	Fuselage Forward Baggage Door	1C24
17	Fuselage Aft Cargo Door	1D2
18	Fuselage Enclosure Installation	1D6
	SECTION III TAIL SURFACES GROUP	
19	Tail Surfaces Installation	1D12
20	Stabilator Assembly	1D16
21	Fin Assembly	1D18
22	Rudder Assembly	1D20
	SECTION IV LANDING GEAR GROUP	
23	Nose Gear Installation	1E2
24	Nose Gear Assembly	1E6
25	Nose Wheel Assembly	1E10
26	Main Gear Installation	1E12
27	Main Gear Assembly	1E16
28	Main Wheel Assembly	1E20
29	Brake Assembly	1E22
30	Landing Gear Door Installation	1E24
31	Hand Brake Installation	1F4
32	Toe Brake Installation	1F8
33	Toe Brake Master Cylinder Assembly	1F12

TABLE OF CONTENTS

FIGURE NUMBER	FIGURE TITLE	GRID NUMBER
	SECTION V CABIN EQUIPMENT GROUP	
34	Cabin Finishing Installation	1F16
35	Window Shades and Reveals Installation	1F20
36	Carpet Installation	1F24
37	Headliner and Forward Fresh Air Duct Installation	1G2
38	Forward Seats Installation	1G6
39	Rear Seats Installation	1G10
40	Aft Facing Seat Assembly - Center	1G14
41	Club Seating Installation	1G16
41A	Entertainment Console (Serial numbers 3246088 and up; 3257001 and up)	1G20
	SECTION VI INSTRUMENTS GROUP	
42	Instrument Panel Installation (Serial numbers 3246001 thru 3246017)	1H4
42A	Instrument Panel Installation (Serial numbers 3246018 thru 3246087)	1H8
42B	Instrument Panel Installation (Serial numbers 3246088 and up)	1H12
42C	Instrument Panel Installation (Serial numbers 3257001 and up)	1H16
43	Vacuum System Installation	1H20
43A	Vacuum System Installation (Sheet 1 of 3)	1H22
	Vacuum System Installation (Sheet 2 of 3)	1H23
	Vacuum System Installation (Sheet 3 of 3)	1H24
44	Standby Vacuum System Installation	1I4
45	Pitot Static System Installation (Sheet 1 of 2)	1I6
	Pitot Statis System Installation (Sheet 2 of 2)	1I7
45A	Pitot Static System Installation (Sheet 1 of 2)	1I10
	Pitot Static System Installation (Sheet 2 of 2)	1I11
	SECTION VII POWER PLANT GROUP	
46	Power Plant Installation (PA-32R-301)	1J2
46A	Power Plant Installation (PA-32R-301T)	1J8
47	Engine Exhaust System Installation	1J14
48	Engine Baffle Installation	1J16
49	Engine Cowl Assembly	1J20
50	Three Blade Propeller Assembly	1J24
51	Engine Controls Installation	1K2
	SECTION VIII FUEL SYSTEM GROUP	
52	Forward Fuel System Installation	1L2
53	Aft Fuel System Installation	1L4
54	Fuel Tank Assemblies	1L8
	SECTION IX CONTROL SYSTEM GROUP	
55	Aileron Control Installation	2A16
56	Flap Control Installation	2A20
57	Stabilator Control Installation	2A24
58	Stabilator Trim Installation	2B2
59	Rudder Control Installation	2B6
60	Rudder Trim Mechanism Installation	2B8
61	Control Wheel Installation	2B10
62	Rudder Pedal Installation	2B14

TABLE OF CONTENTS

FIGURE NUMBER	FIGURE TITLE	GRID NUMBER
	SECTION X HYDRAULIC SYSTEM GROUP	
63	Hydraulic System Installation	2B18
	SECTION XI ENVIRONMENTAL GROUP	
64	Cabin Heat and Defroster System	2C2
64A	Cabin Heat and Ventilation (Serial numbers 3257001 and up)	2C6
65	Aft Fresh Air Duct Installation	2C8
66	Air Conditioning Compressor, Refrigerant Lines, Alternator Installation	2C12
66A	Air Conditioning Compressor (Serial numbers 3246088 and up and 3257001 and up	2C16
67	Air Conditioning Duct and Evaporator Installation	2C18
68	Air Conditioning Condenser Installation	2C22
68A	Oxygen System Installation (Serial Numbers 3257001 and up)	2D2
	SECTION XII ELECTRICAL SYSTEM GROUP	
69	Electrical System Installation	2E2
70	Instrument Panel Electrical Installation	2E10
71	Switch Panel Assembly (Serial numbers 3246001 thru 3246017)	2E14
71A	Switch Panel Assemblies (Serial numbers 3246018 and up; 3257001 and up)	2E16
72	Annunciator Panel Assembly	2E20
73	Circuit Breaker Panel Assembly (Serial numbers 3246001 thru 3246087)	2E24
73A	Circuit Breaker Panel Assembly (Serial numbers 3246088 and up; 3257001 and up)	2F4
74	Air Conditioning Electrical Installation	2F8
75	Battery Box Installation (Serial numbers 3246001 thru 3246017)	2F12
75A	Battery Box Installation (Serial numbers 3246018 and up; 3257001 and up)	2F14
75B	Master Electrical Panel (Serial numbers 3246088 and up; 3257001 and up)	2F18
76	External Power Supply Installation	2F20
78	Strobe Lights Installation	2F24
	SECTION XIII ELECTRONICS GROUP	
79	Emergency Locator Transmitter (ELT 110-4) Installation	2H2
80	Radio, Antenna System and Static Wicks Installation	2H4
	Avionics Installation Drawings	2H7
	SECTION XIV MISCELLANEOUS GROUP	
81	Placards Installation	2I2
	Piper Service and Optional Kits	2I5
	NUMERICAL INDEX	2J1

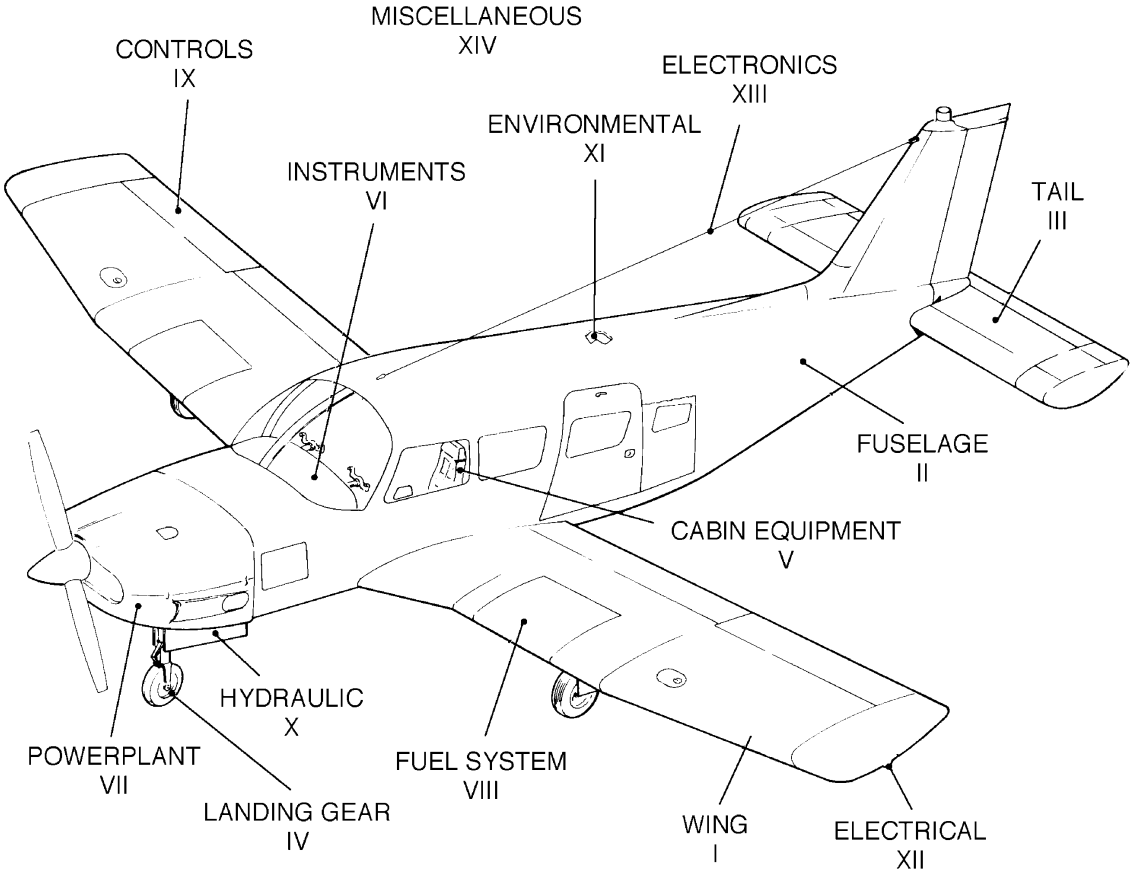

Figure 1. Complete Airplane

SERVICE BULLETINS INCORPORATED

990 - Fig. 38,39
993 - Opt Kits
996 - Fig. 9
1006 - Fig. 4
1009 - Fig. 46
1011 - Fig. 5
1015 - Fig. 69
1018 - Opt Kits
1020 - Fig. 79
1022 - Fig. 46
1023 - Fig. 26
1024 - Fig. 55
1025 - Fig. 46A
1026 - Fig. 43,43A
1028 - Fig. 5
1030 - Opt Kits
1031 - Fig. 42B,42C
1041 - Fig. 43
1049 - Fig. 48
Opt Kits
1081 - Fig. 42B,42C
1083 - Opt Kits
1092 - Fig. 46
1139 - Fig. 61
1141 - Fig. 19

SERVICE LETTERS INCORPORATED

1032 - Fig. 54
1033 - Fig. 66
1043 - Opt Kits
1049 - Fig. 69

(These Service Bulletins and Letters show the base number and may have later revisions than shown, Ex: A, B, Etc. Always check for the latest revision)

THIS PAGE INTENTIONALLY LEFT BLANK

SECTION IX
CONTROL SYSTEM GROUP

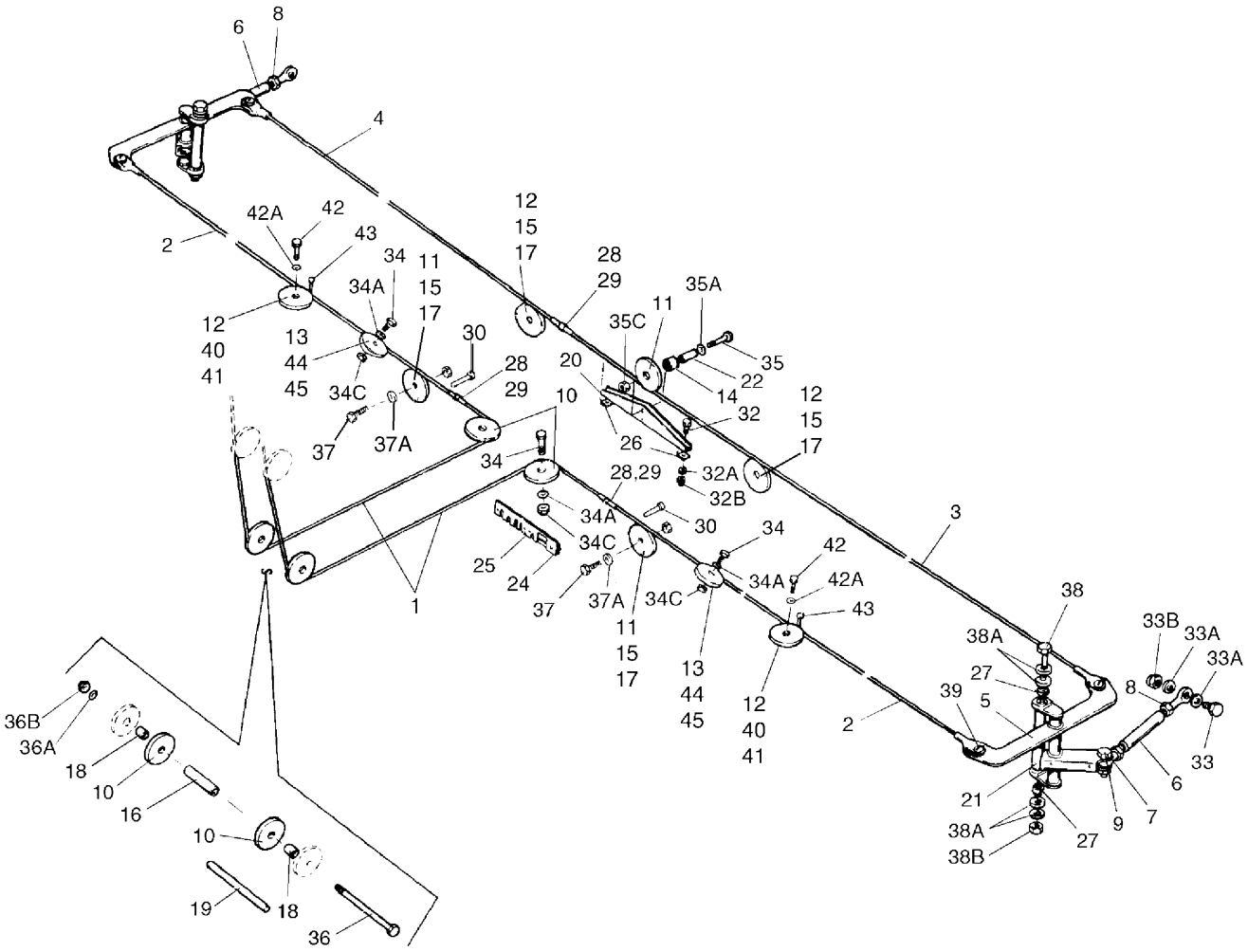

Figure 55. Aileron Control Installation

FIGURE ITEM	PART NUMBER	NOMENCLATURE	EFFECT FROM TO	UNITS PER ASSY
55	38542 (AM)	DRAWING - Control System Installation		
1	62701-036	CABLE ASSY - Aileron, fwd		2
2	62701-199	CABLE ASSY - Aileron, wing		2
3	62701-200	CABLE ASSY - Aileron, balance, left		1
4	62701-201	CABLE ASSY - Aileron, balance, right		1
5	38666-002	BELLCRANK ASSY - Aileron, left		1
-5A	38666-003	BELLCRANK ASSY - Aileron, right		1
6	38665-002	PUSH ROD ASSY		2
7	452-335	BEARING - Rod end		2
-7A	452-336	BEARING - Rod end		2
8	404-322	NUT - (AN316-4R)		2
-8A	404-320	NUT - (AN316-4L)		2
9	400-055	BOLT - (AN3-10)		2
-9A	690-612	WASHER - (NAS1149FN363P)		6
-9B	404-100	NUT - (AN310-3)		2
-9C	424-051	COTTER PIN - (MS24665-132)		2
10	41001-010	PULLEY - Aileron, fwd		4
11	62711-002	PULLEY - Aileron control cable		3
-11A	424-062	. COTTER PIN		2
12	62711-005	PULLEY		4
13	62711-003	PULLEY		2
14	62713-003	BEARING - Pulley, outer		1
15	62713-004	BEARING - Pulley, outer		4
16	62743-006	BUSHING		1
17	65003-047	BUSHING - Inner		4
18	62743-002	BUSHING		2
19	62710-002	PIN - Cable guard		1
20	62746-000	BRACKET - Pulley		1
21	86700-021	SPACER		2
22	62712-003	BEARING - Pulley, inner		1
-23	DELETED			
24	68453-000	FAIRLEAD - Lower		1
-24A	415-521	. SCREW - (MS35206-231)		2
25	68454-000	FAIRLEAD - Upper		1
26	95061-152	SPACER (Refer to Piper Service Bulletin #1024 - Latest Revision for serial numbers 3246001 thru 3246112 and 3257001 thru 3257036)		2
27	452-544	BEARING - (MS20201-KP3A)		4
28	489-910	TURNBUCKLE - (MS21251-B5S)		3
29	554-979	CLIP - (MS21256-1)		6
30	424-513	PIN - (NAS427K19)		2
-31	DELETED			
32	400-441	BOLT - (AN3-7A) (Refer to Piper Service Bulletin #1024 - Latest Revision for serial numbers 3246001 thru 3246112 and 3257001 thru 3257036)		2
32A	690-612	WASHER - (NAS1149FN363P) (Refer to Piper Service Bulletin #1024 - Latest Revision for serial numbers 3246001 thru 3246112 and 3257001 thru 3257036)		2

-Item not illustrated

When ordering, always specify Part Number, Description, and Serial Number of Aircraft

FIGURE ITEM	PART NUMBER	NOMENCLATURE	EFFECT FROM TO	UNITS PER ASSY
55-				
32B	404-526	NUT - (MS21042-3) (Refer to Piper Service Bulletin #1024 - Latest Revision for serial numbers 3246001 thru 3246112 and 3257001 thru 3257036)	3246001 thru 3246112 3257001 thru 3257036	2
33	400-452	BOLT - (AN3-11A)		2
33A	609-612	WASHER - (NAS1149FN3636P)		2
33B	404-526	NUT - (MS21042-3)		2
34	401-188	BOLT - (AN5-10A)		4
34A	690-628	WASHER - (NAS1149F0563P)		4
-34B	690-619	WASHER - (NAS1149F0532P)		8
34C	404-531	NUT - (MS21042-5)		4
35	400-008	BOLT - (AN4-13A)		1
35A	690-628	WASHER - (NAS1149F0563P)		2
-35B	690-611	WASHER - (NAS1149F0463P)		1
35C	404-530	NUT - (MS21042-4)		1
36	401-385	BOLT - (AN5-64A)		1
36A	690-628	WASHER - (NAS1149F0563P)		2
36B	404-531	NUT - (MS21042-5)		1
37	401-315	BOLT - (AN4-15A)		4
37A	690-611	WASHER - (NAS1149F0463P)		4
38	400-479	BOLT - (AN3-56A)		2
38A	690-612	WASHER - (NAS1149FN363P)		8
38B	404-526	NUT - (MS21042-3)		2
39	400-674	BOLT - (AN23-12)		4
-39A	63900-031	BUSHING		4
-39B	690-612	WASHER - (NAS1149FN363P)		8
-39C	404-392	NUT - (AN320-3)		4
-39D	424-051	COTTER PIN - (MS24665-132)		4
40	62713-002	BEARING - Pulley outer		2
41	65003-029	BUSHING - Inner		2
42	401-310	BOLT - (AN4-10A)		2
42A	690-611	WASHER - (NAS1149F0463P)		8
-42B	404-530	NUT - (MS21042-4)		2
43	424-502	PIN - (NAS427-K8)		2
44	62715-002	BEARING - Pulley outer		2
45	62714-004	BUSHING - Inner		2

-Item not illustrated

When ordering, always specify Part Number, Description, and Serial Number of Aircraft

THIS PAGE INTENTIONALLY LEFT BLANK

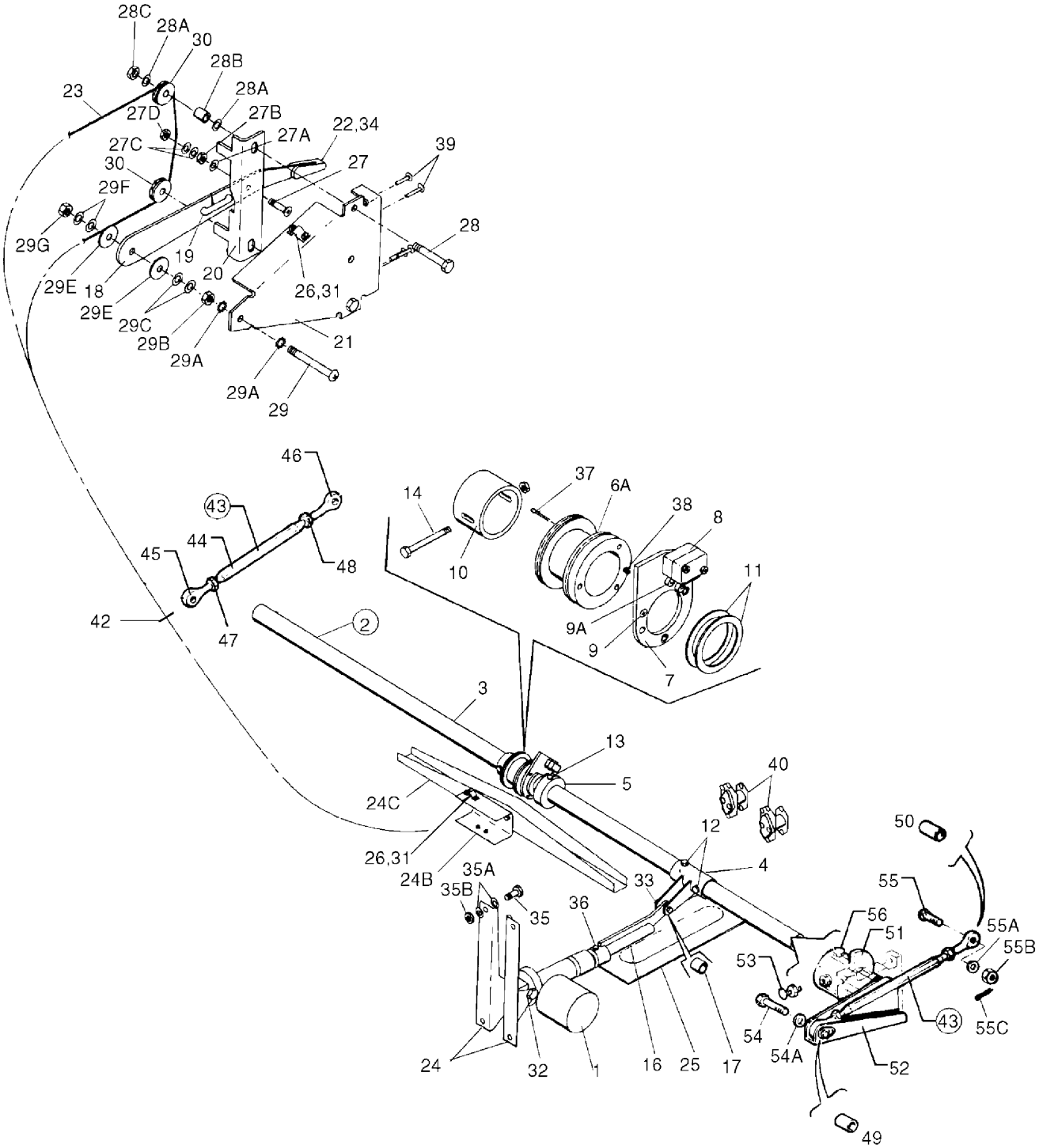

Figure 56. Flap Control Installation

FIGURE ITEM	PART NUMBER	NOMENCLATURE	EFFECT FROM TO	UNITS PER ASSY
56	87766 (T)	DRAWING - Electric Flaps Installation		
	38542 (AM)	DRAWING - Control System Installation		
	62764 (W)	DRAWING - Rod Assy - Flap		
	68451 (E)	DRAWING - Tube Assy - Flap, Torque		
	87765 (T)	DRAWING - Electric Flap Assy		
1	552-605	ACTUATOR - Flap, 14 volt	3246001 thru 3246017	1
1	552-615	ACTUATOR - Flap, 28 volt	3246018 and up 3257001 and up	1
2	68451-003	TUBE ASSY - Flap torque, complete		1
3	68452-004	. TORQUE TUBE - Flap		1
4	87765-003	. BELLCRANK ASSY - Flap torque tube		1
5	87765-032	. CAM - Flap torque tube		1
-6	87765-033	SWASH PLATE ASSY		1
6A	87765-012	. . PULLEY - Flap torque tube		1
7	87765-034	. . LEVER - Switch, flap torque tube		1
8	487-925	. . SWITCH - Flap torque tube (V3-1)		2
-8A	--- ---	. . SCREW - (AN515-4-18)		2
-8B	690-653	. . WASHER - (MS35333-36)		2
-8C	603-337	. . NUT - (MS35649-242)		2
9	414-748	. . SCREW - Pulley attachment (MS24693-S28)		3
9A	451-841	. . ACTUATOR - Switch (JV-5)		2
10	87765-035	. RETAINER - Flap torque tube		1
11	87765-040	. WASHER		2
12	400-012	. BOLT - Bellcrank attachment (AN4-17A)		2
-12A	690-611	. WASHER - (NAS1149F0463P)		AR
-12B	404-836	. NUT - (MS20365-428C)		2
13	486-304	. SCREW - Set (MS51966-112)		2
-13A	408-044	. WASHER - (MS35333-39)		2
14	400-446	. BOLT - Retainer attachment (AN3-16A)		1
-14A	404-892	. NUT - (MS20365-1032A)		1
16	87765-002	ROD ASSY - Flap actuator		1
17	452-744	. BEARING - Actuator rod end (MS27641-4)		1
18	87765-046	LEVER - Flap selector		1
-18A	87539-006	HARNESS ASSY		1
19	87765-025	BAR - Detent, flap lever		1
-19A	87765-028	CLAMP		1
20	87765-045	PLATE - Detent, flap selector		1
21	87765-018	BRACKET ASSY - Flap selector		1
22	85096-002	KNOB - Flap selector lever		1
-22A	414-748	. SCREW - (MS24693-S28)		2
-22B	514-702	. SCREW - (MS24693-S51)		4
23	87765-041	CABLE - Flap selector		1
24	87765-005	BRACKET - Actuator mounting, left		1
-24A	87765-006	BRACKET - Actuator mounting, right		1
24B	87765-014	BRACKET - Cable support		1
24C	68450-002	BRACKET ASSY - Aileron balance cable		1
-24D	87539-004	BUSS BAR		1
-24E	87539-003	HARNESS ASSY		1
-24F	35402-000	CLAMP ASSY - torque tube		2
-24G	35402-004	SHIM - torque tube		AR
-24H	62763-002	SUPPORT - torque tube		1
25	87765-013	COVER - Flap actuator		1
26	66853-000	CLAMP - Cable		4

-Item not illustrated

When ordering, always specify Part Number, Description, and Serial Number of Aircraft

FIGURE ITEM	PART NUMBER	NOMENCLATURE	EFFECT FROM TO	UNITS PER ASSY
56-				
-26A	415-535	SCREW - (MS21042-3)		4
27	400-438	STUD - Flap selector lever (AN3-4A)		1
27A	408-044	WASHER - (MS35333-39)		1
-27A	690-609	WASHER - (NAS1149F0332P)		1
27B	404-224	NUT - (AN315-3R)		1
-27B	404-526	NUT - (MS21042-3)		2
27C	690-609	WASHER - (NAS1149F0332P)		2
27D	404-526	NUT - (MS21042-3)		1
28	400-444	BOLT - (AN3-13A)		2
28A	690-609	WASHER - (NAS1149F0332P)		4
28B	95061-192	SPACER - Inner		2
28C	404-526	NUT - (MS21042-3)		2
29	411-537	SCREW - Lever assy retaining (MS35207-268)		1
29A	408-100	WASHER - (MS35335-32)		2
29B	404-224	NUT - (AN315-3R)		2
29C	690-612	WASHER - (NAS1149FN363P)		2
-29D	690-609	WASHER - (NAS1149F0332P)		1
29E	407-800	WASHER - (AN970-3)		2
29F	408-813	WASHER - Spring		2
29G	404-526	NUT - (MS21042-3)		1
30	62711-004	PULLEY - Flap selector cable		2
31	415-533	SCREW - Clamp attachment (MS35206-243)		4
-31A	690-618	WASHER - (NAS1149FN816P)		4
-31B	404-529	NUT - (MS21042-08)		4
32	400-012	BOLT - (AN4-17A)		1
-32A	690-611	WASHER - (NAS1149F0463P)		2
-32B	63900-172	BUSHING		1
-32C	690-629	WASHER - (NAS1149F0663P)		3
-32D	404-530	NUT - (MS21042-4)		1
33	401-310	BOLT - (AN4-10A)		1
-33A	690-611	WASHER - Inner (NAS1149F0463P)		2
-33B	690-613	WASHER - (NAS1149F0432P)(under nut)		1
-33C	404-530	NUT - (MS21042-3)		1
34	414-748	SCREW - Knob attachment (MS24693-S28)		2
35	400-003	BOLT - Actuator mounting bracket attachment (AN4-6A)		4
35A	690-611	WASHER - (NAS1149F0463P)		8
35B	404-530	NUT - (MS21042-4)		4
36	486-304	SCREW - Set (MS51966-112)		2
37	424-052	COTTER PIN - Cable guard (MS24665-134)		1
38	424-053	COTTER PIN - Cable guard (MS24665-136)		1
39	414-762	SCREW - Flap selector bracket attachment (MS24693-S51)		4
40	584-350	RELAY - Flap actuator	3246001 thru 3246017	2
40	584-017	RELAY - Flap actuator	3246018 and up 3257001 and up	2
-41	DELETED			
42	454-930	CLAMP		4
-42A	400-437	BOLT - (AN3-3A)		1
-42B	690-612	WASHER - (NAS1149FN363P)		2
-42C	404-892	NUT - (MS20365-1032A)		1
-42D	411-534	SCREW - (MS35207-265)	3246088 and up 3257001 and up	2
-42E	690-609	WASHER - (NAS1149F0332P)	3246088 and up 3257001 and up	1

-Item not illustrated

When ordering, always specify Part Number, Description, and Serial Number of Aircraft

FIGURE ITEM	PART NUMBER	NOMENCLATURE	EFFECT FROM TO	UNITS PER ASSY
56-				
-42F	86700-006	SPACER	3246088 and up 3257001 and up	1
-42G	404-526	NUT - (MS21042-3)	3246088 and up 3257001 and up	1
43	62764-000	ROD ASSY - Flap tube		2
44	62764-002	. TUBE - Flap		1
45	452-335	. BEARING		1
46	452-336	. BEARING		1
47	404-322	. NUT - (AN316-4R)		1
48	404-320	. NUT - (AN316-4L)		1
49	63900-038	BUSHING - Flap rod end		2
50	63900-039	BUSHING - Flap rod end		2
51	62856-000	FITTING ASSY - Left		1
-51A	62856-001	FITTING ASSY - Right		1
52	62727-000	WELD ASSY - Flap torque tube, left		1
-52A	62727-001	WELD ASSY - Flap torque tube, right		1
53	411-538	SCREW - (MS35207-269)		2
-53A	404-224	NUT - (AN315-3R)		2
54	400-443	BOLT - (AN3-12A)		2
54A	690-612	WASHER - (NAS1149FN363P)		2
55	400-680	BOLT - (AN23-18)		2
55A	690-612	WASHER - (NAS1149FN363P)		2
55B	404-100	NUT - Castle (AN310-3)		2
55C	424-051	COTTER PIN - (MS24665-132)		2
56	401-318	BOLT - (AN4-20A)		4
-56A	690-611	WASHER - (NAS1149F0463P)		4
-56B	404-530	NUT - (MS21042-4)		4

-Item not illustrated

When ordering, always specify Part Number, Description, and Serial Number of Aircraft

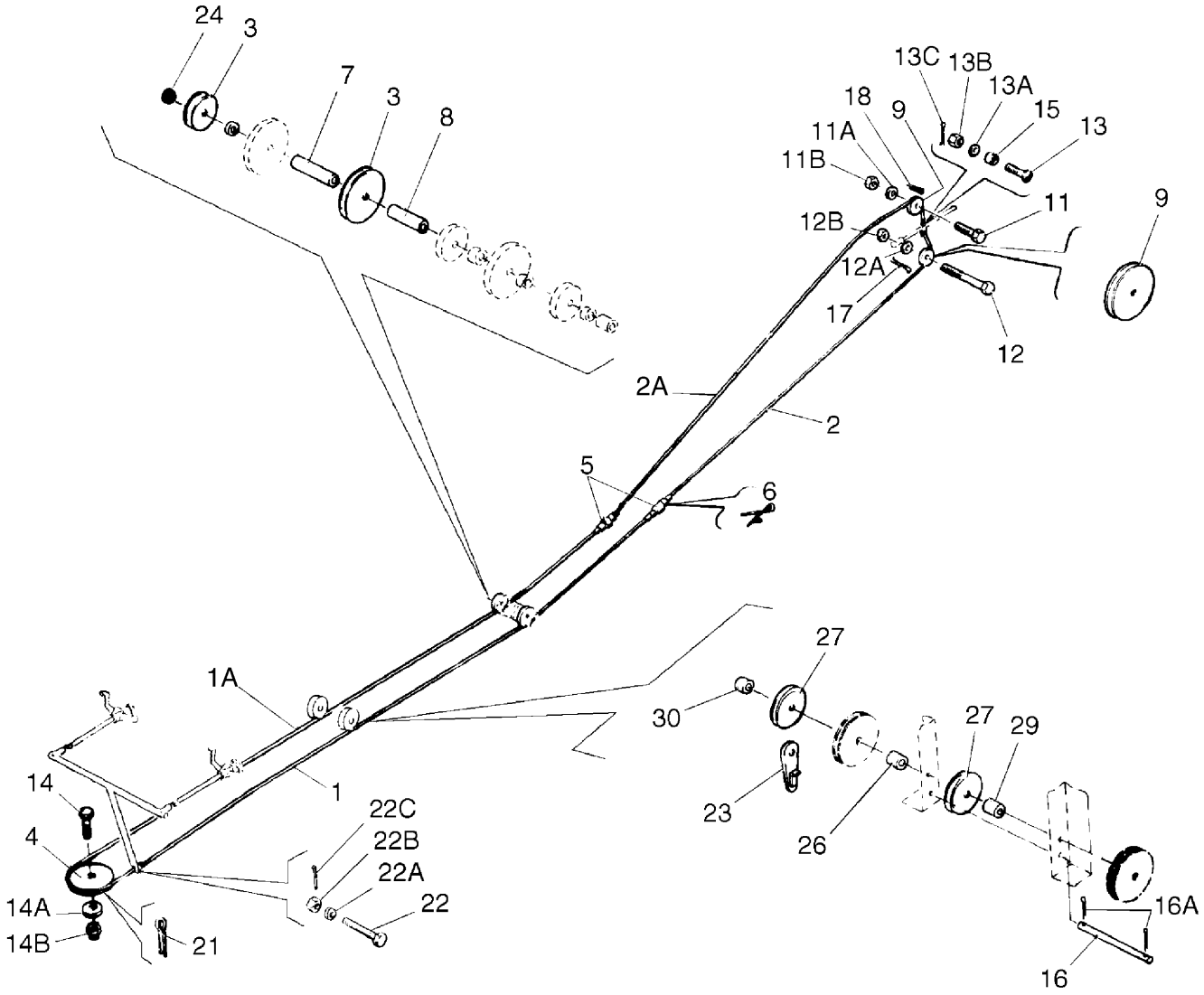

Figure 57. Stabilator Control Installation

FIGURE ITEM	PART NUMBER	NOMENCLATURE	EFFECT FROM TO	UNITS PER ASSY
57	38542 (AM)	DRAWING - Control System Installation		
1	62701-207	CABLE ASSY - Stabilator control, forward left		1
1A	62701-037	CABLE ASSY - Stabilator control, forward right		1
2	62701-208	CABLE ASSY - Stabilator control, aft lower		1
2A	62701-205	CABLE ASSY - Stabilator control, aft upper		1
3	62711-003	PULLEY - Stabilator control, right		1
4	481-652	PULLEY - Stabilator control (MS20220-2)		1
5	489-910	TURNBUCKLE - (MS21251-B5S)		2
6	554-979	CLIP - (MS21256-1)		4
7	62743-011	SPACER		1
8	62743-010	SPACER		1
9	41001-010	PULLEY - Stabilator control, aft		2
-10	DELETED			
11	401-188	BOLT - Upper pulley (AN5-10A)		1
11A	690-628	WASHER - Upper pulley (NAS1149F0563P)		1
11B	404-531	NUT - Upper pulley (MS21042-5)		1
12	401-354	BOLT - Lower pulley (AN5-13A)		1
12A	690-628	WASHER - Lower pulley (NAS1149F0563P)		1
12B	404-531	NUT - Lower pulley (MS21042-5)		1
13	400-674	BOLT - (AN23-12)		2
13A	690-612	WASHER - (NAS1149FN363P)		2
13B	404-392	NUT - (AN320-3)		2
13C	424-051	COTTER PIN - (MS24665-132)		2
14	401-353	BOLT - (AN5-12A)		1
14A	690-628	WASHER - (NAS1149F0563P)		1
14B	404-531	NUT - (MS21042-5)		1
15	63900-031	BUSHING		2
16	62710-003	PIN - Pulley guard		1
16A	424-051	PIN - Cotter (MS24665-132)		2
17	424-054	PIN - Cotter (MS24665-140)		1
18	424-053	PIN - Cotter (MS24665-136)		1
-19	DELETED			
-20	DELETED			
21	424-054	PIN - Cotter (MS24665-140)		2
22	400-056	BOLT - (AN3-11)		1
22A	690-612	WASHER - (NAS1149FN363P)		1
22B	404-392	NUT - (AN320-3)		1
22C	424-051	COTTER PIN - (MS24665-132)		1
23	62709-000	HOLDER - Cable guide		1
24	690-629	WASHER - (NAS1149F0663P)		6
-25	DELETED			
26	62743-005	SPACER		1
27	62711-003	PULLEY - Stabilator control		2
-28	DELETED			
29	62714-002	BUSHING - Pulley inner		1
30	62715-002	BUSHING - Pulley outer		1

-Item not illustrated

When ordering, always specify Part Number, Description, and Serial Number of Aircraft

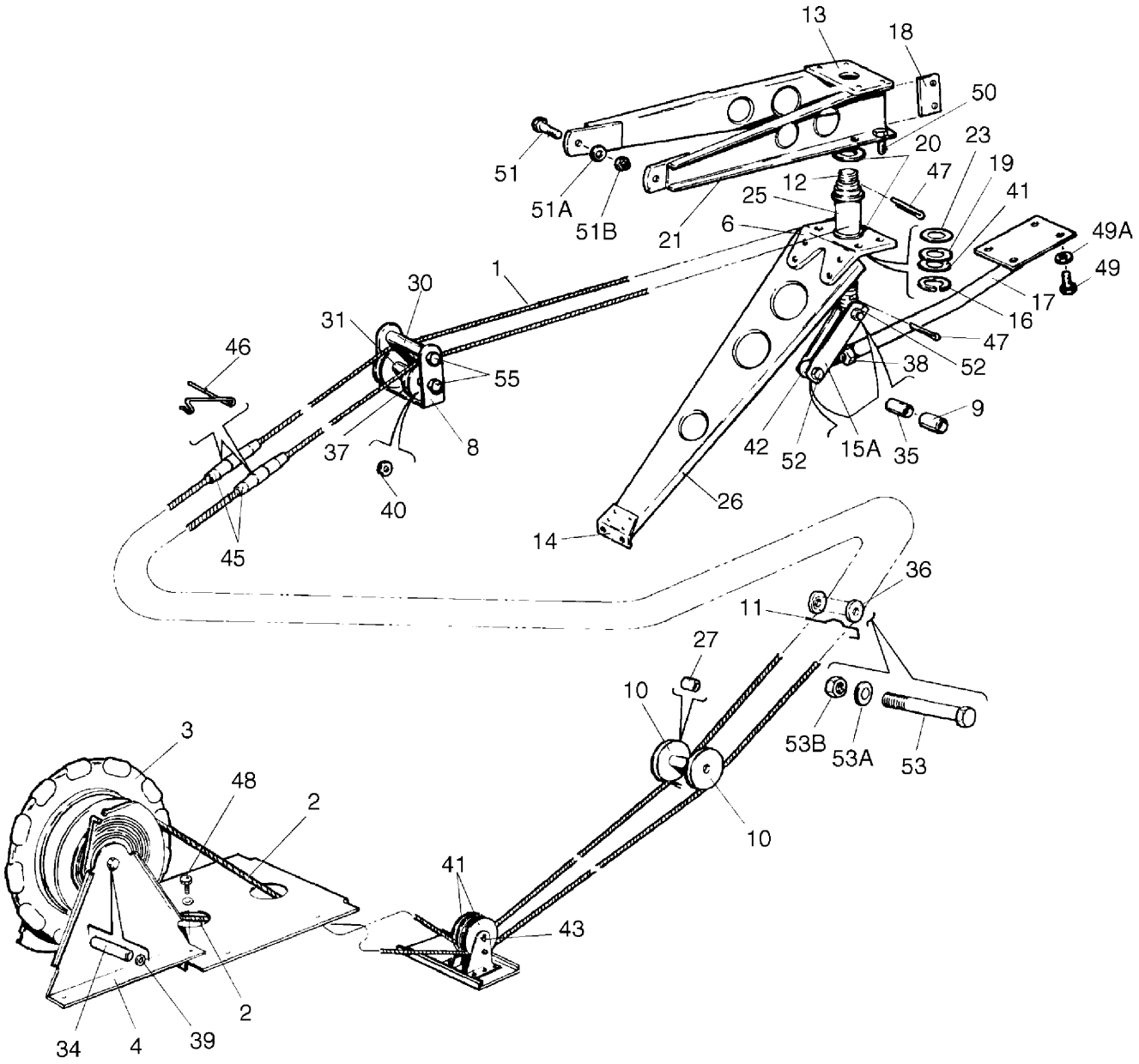

Figure 58. Stabilator Trim Installation

FIGURE ITEM	PART NUMBER	NOMENCLATURE	EFFECT FROM TO	UNITS PER ASSY
58	38542 (AM)	DRAWING - Control System Installation		
	65258 (U)	DRAWING - Stabilator Trim Installation		
	79700 (AO)	DRAWING - Zinc Chromate and Cable Kit (Optional Equipment)		
1	62701-047	CABLE - Stabilator trim, aft	3246001 thru 3246153 3257001 thru 3257123	1
1	62701-216	CABLE - Stabilator trim, aft	3246154 and up 3257124 and up	1
1	62701-047	CABLE - Stabilator trim, aft zinc chromate and cable kit (optional)	3246154 and up 3257124 and up	
1	62701-151	CABLE - Stabilator trim, forward Installed with auto-pilot kit	3246001 thru 3246153 3257001 thru 3257123	1
2	62701-041	CABLE - Stabilator trim, forward		2
3	68414-003	WHEEL ASSY - Trim tab		1
4	69292-003	BRACKET ASSY - Trim tab		1
-4A	419-520	. SCREW - (AN531-6R8)		3
-5	DELETED			
6	65250-002	CLIP - Stabilator trim		1
-7	DELETED			
8	68472-000	BRACKET - Stabilator trim pulley		1
9	63882-009	SLEEVE - Stabilator trim link		2
10	63955-002	PULLEY - Trim tab		2
11	99856-000	GUARD - Cable		1
12	65246-000	SHAFT - Stabilator trim		1
13	65249-002	PLATE - Stabilator trim		1
14	65252-000	CLIP - Stabilator trim		1
-14A	69498-000	. PLATE		2
-14B	400-440	. BOLT - (AN3-6A)		2
-14C	690-612	. WASHER - (NAS1149FN363P)		2
-14D	404-526	. NUT - (MS21042-3)		2
-15	65258-008	SUPPORT ASSY		1
15A	65253-002	. LINK - Stabilator trim		2
16	484-747	SNAP RING		1
17	65248-003	ARM ASSY - Stabilator trim		1
18	68491-000	GUARD - Cable		2
19	452-418	BEARING - Thrust		1
20	452-413	BEARING		2
21	65258-007	RIB - Stabilator trim		2
23	62833-018	SHIM - Stabilator trim		1
-24	DELETED			
25	63530-000	BARREL - Stabilator trim		1
26	65258-009	RIB - Stabilator trim		1
27	62714-002	BUSHING - Trim tab		1
-28	DELETED			
-29	DELETED			
30	63900-055	BUSHING - Stabilator trim pulley		1
31	63900-056	BUSHING - Stabilator trim pulley		1
-32	DELETED			
-33	DELETED			
34	63900-061	BUSHING		1
35	65003-006	BUSHING - Stabilator trim link		2
36	62711-004	PULLEY - Stabilator trim		2
-36A	69851-000	RETAINER PIN - Stabilator trim		1

-Item not illustrated

When ordering, always specify Part Number, Description, and Serial Number of Aircraft

FIGURE ITEM	PART NUMBER	NOMENCLATURE	EFFECT FROM TO	UNITS PER ASSY
58-				
-36B	406-369	NUT - (A1037-012-3)		2
37	481-640	PULLEY - (MS24566-1B)		4
38	404-325	NUT - (AN316-7R)		1
39	62833-037	WASHER		1
40	690-612	WASHER - (NAS1149FN363P)		2
41	690-623	WASHER - (NAS1149C1323R)		1
42	65254-000	BOLT - Eye, stabilator trim		1
43	424-180	PIN - (MS20392-2C23)		1
-43A	424-051	COTTER PIN - (MS24665-132)		1
-44	DELETED			
45	489-873	BARREL - Turnbuckle (MS21251-B2S)		2
46	554-979	CLIP - Turnbuckle safety (MS21256-1)		4
47	424-123	COTTER PIN - (MS24665-368)		2
47	--- ---	COTTER PIN -(AN380C4-3)		2
48	400-437	BOLT - (AN3-3A)		4
49	400-437	BOLT - (AN3-3A)		4
49A	690-609	WASHER - (NAS1149F0332P)		4
50	400-438	BOLT - (AN3-4A)		4
-50A	693-612	WASHER - (NAS1149FN363P)		4
-50B	404-526	NUT - (MS21042-3)		4
51	401-266	BOLT - (AN3-5A)		2
51A	494-066	WASHER - (K19001-3)		2
51B	406-551	NUT - (H19000-3)		2
52	401-269	BOLT - (AN3-10A)		2
-52A	65258-005	BUSHING ASSY		1
-52B	690-612	WASHER - (NAS1149FN363P)		4
-52C	404-526	NUT - (MS21042-3)		2
53	400-449	BOLT - (AN3-24A)		1
53A	690-609	WASHER - (NAS1149F0332P)		1
53B	404-526	NUT - (MS21042-3)		1
-53B	690-612	WASHER - (NAS1149FN363P)		1
-53C	404-526	NUT - (MS21042-3)		1
-54	DELETED			
55	401-279	BOLT - (AN3-25A)		2
-55A	63900-062	BUSHING		1
-55B	690-609	WASHER - (NAS1149F0332P)		2
-55C	63900-057	BUSHING		1
-55D	63900-058	BUSHING		1
-55E	404-526	NUT - (MS21042-3)		2

-Item not illustrated

When ordering, always specify Part Number, Description, and Serial Number of Aircraft

THIS PAGE INTENTIONALLY LEFT BLANK

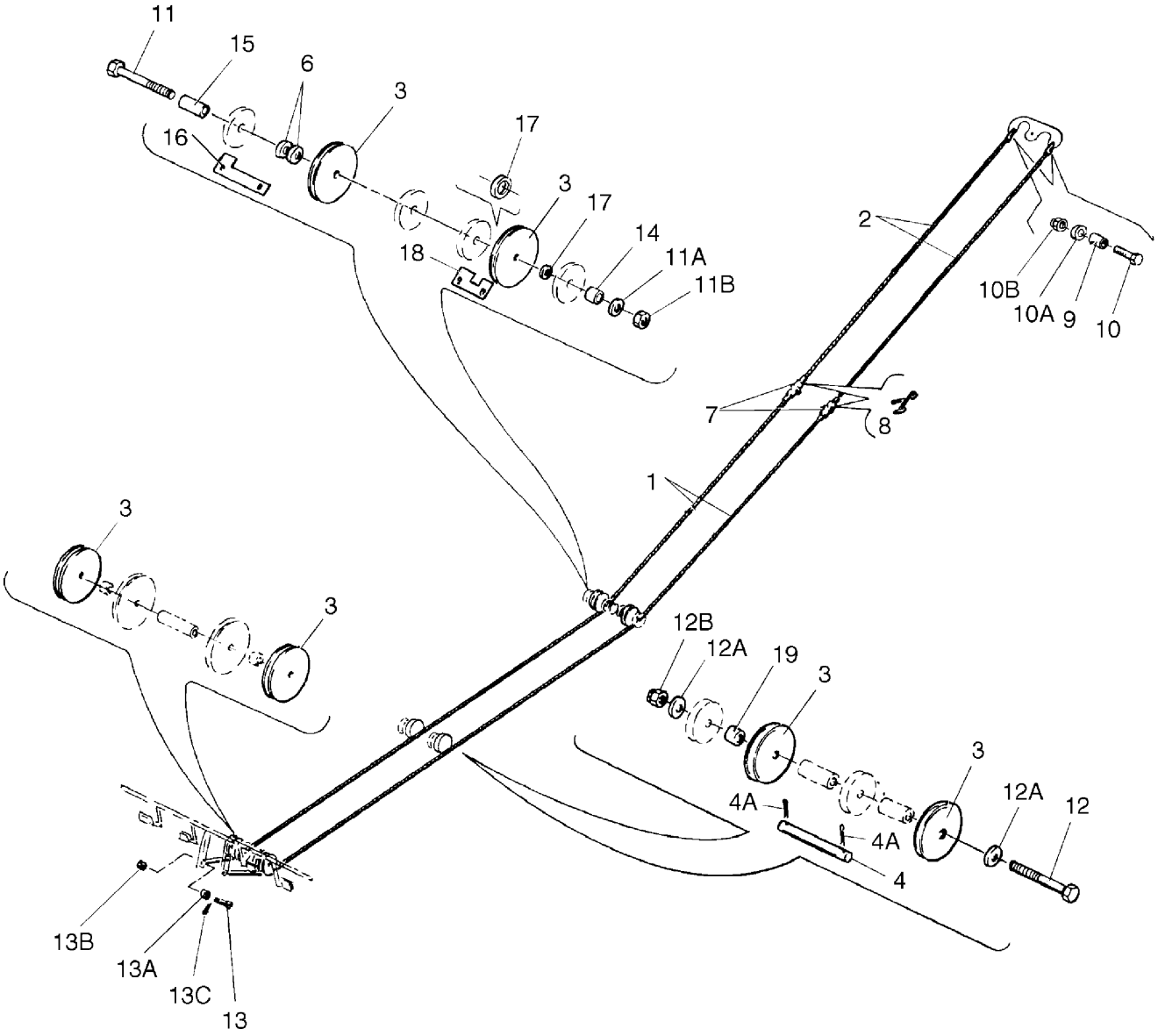

Figure 59. Rudder Control Installation

FIGURE ITEM	PART NUMBER	NOMENCLATURE	EFFECT FROM TO	UNITS PER ASSY
59	38542 (AM)	DRAWING - Control System Installation		
1	62701-037	CABLE ASSY - Rudder control, forward		2
2	62701-008	CABLE ASSY - Rudder control, aft		1
3	41001-010	PULLEY - Rudder control		6
4	62710-003	PIN - Pulley guard		1
4A	424-051	PIN - Cotter (MS24665-132)		2
-5	DELETED			
6	690-628	WASHER - (NAS1149F0563P)		2
7	489-910	TURNBUCKLE - Rudder cable (MS21251-B5S)		2
8	554-979	CLIP - Rudder cable (MS21256-1)		4
9	63900-031	BUSHING		2
10	400-674	BOLT - (AN23-12)		2
10A	690-612	WASHER - (NAS1149FN363P)		2
10B	404-392	NUT - (AN320-3)		2
-10C	424-051	COTTER PIN - (MS24665-132)		2
11	401-387	BOLT - (AN5-70A)		1
11A	690-628	WASHER - (NAS1149F0563P)		3
11B	404-531	NUT - (MS21042-5)		1
12	401-378	BOLT - (AN5-53A)		1
12A	690-628	WASHER - (NAS1149F0563P)		3
12B	404-889	NUT - (MS21042-5)		1
13	400-673	BOLT - (AN23-11)		2
13A	690-612	WASHER - (NAS1149FN363P)		2
13B	404-392	NUT - (AN320-3)		2
13C	424-051	COTTER PIN - (MS24665-132)		2
14	62743-009	SPACER - Control pulleys		1
15	62743-008	SPACER - Control pulleys		1
16	99429-000	FAIRLEAD - Controls, left		1
17	690-629	WASHER - (NAS1149F0663P)		2
18	99430-000	FAIRLEAD - Control, right		1
19	62743-003	SPACER - Control pulleys		1

-Item not illustrated

When ordering, always specify Part Number, Description, and Serial Number of Aircraft

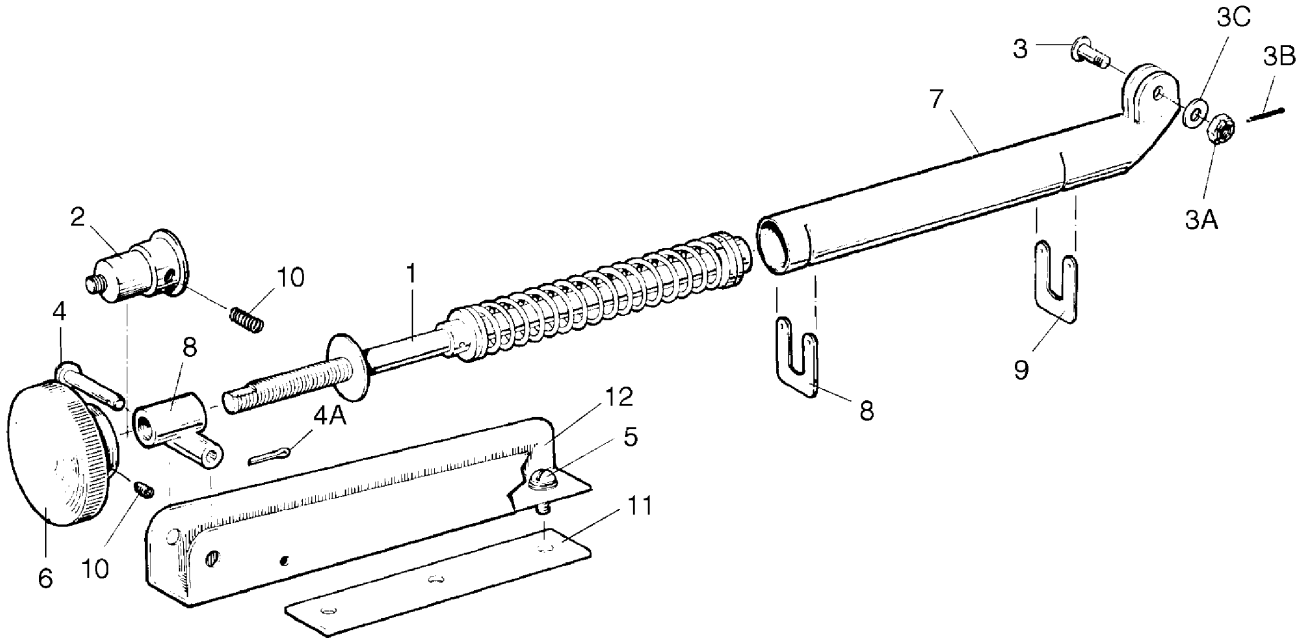

Figure 60. Rudder Trim Mechanism Installation

FIGURE ITEM	PART NUMBER	NOMENCLATURE	EFFECT FROM TO	UNITS PER ASSY
60	38542 (AM)	DRAWING - Control System Installation		
	69371 (C)	DRAWING - Rudder Trim Mechanism Installation		
	62828 (Z)	DRAWING - Rudder Trim Installation		
1	62829-005	SHAFT ASSY - Rudder trim		1
2	69349-000	EXTENSION - Rudder trim shaft		1
3	400-672	BOLT - (AN23-10)		1
3A	404-392	NUT - (AN320-3)		1
3B	424-051	COTTER PIN - (MS24665-132)		1
3C	690-609	WASHER - (NAS1149F0332P)		1
4	424-185	PIN - Flat head (MS20392-2-33)		1
4A	424-051	COTTER PIN - (MS24665-132)		1
5	415-535	SCREW - (MS35206-245)		3
-5A	690-618	WASHER - (NAS1149FN816P)		7
-5B	404-833	NUT - (MS20364-832C)		1
6	62838-000	KNOB		1
7	66530-000	HOUSING - Rudder trim		1
8	62831-000	BUSHING ASSY - Rudder trim		1
9	62832-000	CLIP - Rudder trim		2
10	419-967	SCREW - Set (MS51964-132)		2
11	62836-000	PLATE - Rudder trim		1
12	62837-002	CHANNEL ASSY - Rudder trim		1

-Item not illustrated

When ordering, always specify Part Number, Description, and Serial Number of Aircraft

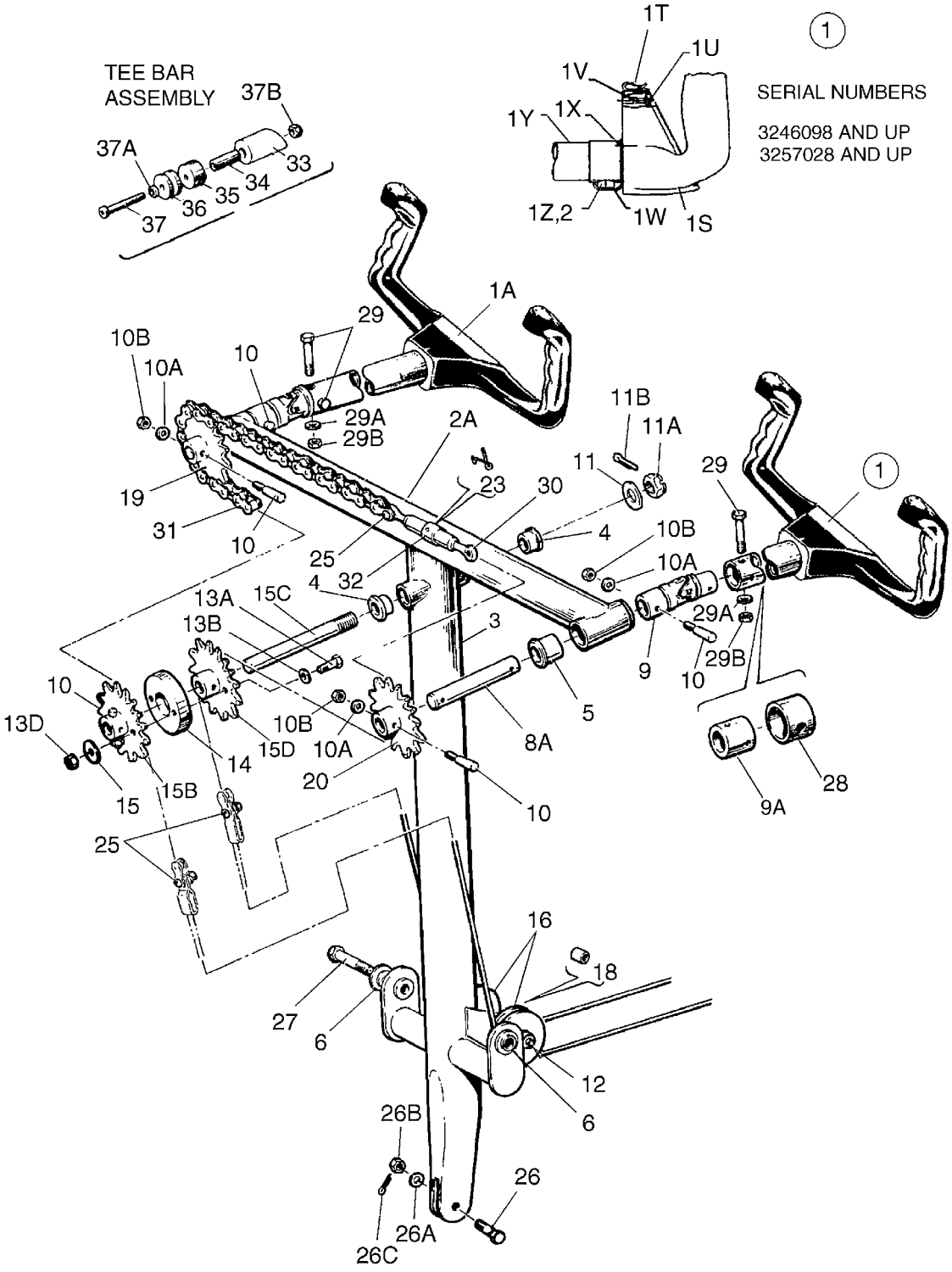

Figure 61. Control Wheel Installation

FIGURE ITEM	PART NUMBER	NOMENCLATURE	EFFECT FROM TO	UNITS PER ASSY
61	38542 (AM)	DRAWING - Control System Installation		
	85292 (V)	DRAWING - Control Wheel Assy		
	100572 (H)	DRAWING - Control Wheel Assy		
	62703 (BV)	DRAWING - Tee Bar Assy		
	62019 (V)	DRAWING - Tee Bar Assy		
1	85292-010	WHEEL ASSY - Control (no switches)(malibu grey)	3246001 thru 3246097	1
1	85292-022	WHEEL ASSY - Control (no switches)(malibu grey)	3257001 thru 3257027	1
1	100572-003	WHEEL ASSY - Control, pilot and copilot	3246098 and up 3257028 and up	1
1A	85292-014	WHEEL ASSY - Control, co-pilot (with mic switch) (malibu grey)	3246001 thru 3246097	1
1A	85292-023	WHEEL ASSY - Control, co-pilot (with mic switch) (malibu grey)	3257001 thru 3257027	1
-1B	38433-002	. SHAFT	3246001 thru 3246097 3257001 thru 3246097	1
-1C	67321-000	. PIN	3246001 thru 3246097 3257001 thru 3257027	1
-1D	82940-002	. CAP	3246001 thru 3246097 3257001 thru 3257027	2
-1E	82940-003	. PLUG	3246001 thru 3246097 3257001 thru 3257027	2
-1F	89940-005	. COVER	3246001 thru 3246097	1
-1F	89940-008	. COVER	3257001 thru 3257027	
-1G	414-690	. SCREW - (AN505B2R6)	3246001 thru 3246097 3257001 thru 3257027	2
-1H	415-421	. SCREW - (MS35198-7)	3246001 thru 3246097 3257001 thru 3257027	2
-1J	486-079	. SCREW - (MS24693-S58)	3246001 thru 3246097 3257001 thru 3257027	2
-1K	553-571	. CAP PLUG	3246001 thru 3246097 3257001 thru 3257027	1
-1L	84549-004	. SWITCH ASSY - Mic (Includes wire, tube, and switch)	3246001 thru 3246097 3257001 thru 3257027	1
-1M	688-289	. . SWITCH	3246001 thru 3246097 3257001 thru 3257027	1
-1N	82974-008	. CAP - used with mic	3246001 thru 3246097 3257001 thru 3257027	1
-1P	553-570	. HOLE PLUG - (2617) used with mic	3246001 thru 3246097 3257001 thru 3257027	1
-1Q	82980-007	. WHEEL - Control (malibu grey)	3246001 thru 3246097 3257001 thru 3257027	1
-1R	100572-004	. WHEEL ASSY	3246098 and up 3257028 and up	1
1S	599-608	. . WHEEL - Control	3246098 and up 3257028 and up	1
1T	654-212	. . CLIP	3246098 and up 3257028 and up	1
1U	474-364	. . MEDALLION	3246098 and up 3257028 and up	1
1V	520-025	. . SCREW - (MS16997-22)	3246098 and up 3257028 and up	4

-Item not illustrated

When ordering, always specify Part Number, Description, and Serial Number of Aircraft

FIGURE ITEM	PART NUMBER	NOMENCLATURE	EFFECT FROM TO	UNITS PER ASSY
61-				
1W	104687-002	. . RETAINER CLIP	3246098 and up	AR
		(Refer to Piper Service Bulletin 1139 - latest revision)	3257028 and up	
1X	416-390	. . SCREW - (MS24694-S40)	3246098 and up	4
		(Refer to Piper Service Bulletin 1139 - latest revision	3257028 and up	
1Y	100571-003	. TUBE ASSY	3246098 and up	1
			3257028 and up	
1Z	101105-002	. SPACER	3276098 and up	1
			3257028 and up	
1Z	101118-003	. SPACER	3246098 thru 3246214	1
		(Refer to Piper Service Bulletin 1139 -latest revision	3257028 thru 3257327	
2	410-047	. SCREW - (MS24694-S60)	3246098 and up	1
		(Refer to Piper Service Bulletin 1139 -latest revision	3257028 and up	
2A	62019-004	CONTROL COLUMN ASSY		1
3	62703-034	. TEE BAR ASSY - Control column		1
4	452-372	. . BEARING		2
-4A	63900-051	. . BUSHING		1
-4B	63449-006	. . LUG		2
-4C	404-757	. . BOLT - (NAS428-3A7)		2
-4D	404-224	. . NUT - (AN315-3R)		2
-4E	404-526	. . NUT - (MS21042-3)		2
5	452-389	. BEARING		4
6	452-388	. BEARING - (F4DDC5)		2
-7	DELETED			
-8	68028-003	. SHAFT ASSY - Tee bar		2
8A	62716-007	. . SHAFT - Control column		2
9	62834-002	. . UNIVERSAL JOINT - Control column		2
9A	68557-000	. . BUSHING - Tee bar		2
10	480-730	. PIN - (AN386-1-6A)		5
10A	494-093	. WASHER - (AN975-3)		5
10B	404-835	. NUT - (MS20364-1032C)		5
11	690-630	. WASHER - (NAS1149F0763P)		1
11A	404-104	. NUT - (AN310-7)		1
11B	424-060	. COTTER PIN - (MS24665-285))		1
12	401-333	. BOLT - (AN4-35A)		1
-12A	690-611	. WASHER - (NAS1149F0463P)		4
-12B	404-530	. NUT - (MS21042-4)		1
-13	63409-002	. SPROCKET ASSY - Tee bar		1
13A	401-269	. . BOLT - (AN3-10A)		2
13B	690-612	. . WASHER - (NAS1149FN363P)		2
-13C	690-609	. . WASHER - (NAS1149F0332P)		2
13D	404-526	. . NUT - (MS21042-3)		2
14	62782-000	. . SPACER - Control column		1
15	62784-000	. . WASHER - Control column		2
-15A	63405-002	. . SHAFT ASSY - Tee bar		1
15B	63404-000	. . . SPROCKET - Control column, center rear		1
15C	69077-000	. . . SHAFT - Control column, center		1
15D	62778-000	. . SPROCKET - Control column, center rear		1
16	481-651	. PULLEY - Control column (MS20220-1)		2
18	62712-004	. BUSHING - Control column pulley		2
19	62845-002	. SPROCKET - Control column, right		1
20	62839-000	. SPROCKET ASSY - Control column, left		1
23	554-979	CLIP - Turnbuckle (MS21256-1)		2
25	400-653	BOLT - (AN21-9)		4
-25A	404-391	NUT - (AN320-1)		4

-Item not illustrated

When ordering, always specify Part Number, Description, and Serial Number of Aircraft

FIGURE ITEM	PART NUMBER	NOMENCLATURE	EFFECT FROM TO	UNITS PER ASSY
61-				
-25B	424-041	COTTER PIN - (MS24665-5)		4
-25C	690-640	WASHER - (NAS1149FN632P)		2
26	400-056	BOLT - (AN3-11)		1
26A	690-612	WASHER - (NAS1149FN363P)		1
26B	404-530	NUT - (MS21042-4)		1
26C	424-051	COTTER PIN - (MS24665-132)		1
27	401-310	BOLT - (AN4-10A)		2
-27A	404-530	NUT - (MS21042-4)		2
28	67193-005	STOP - Tee bar, left		1
29	66546-000	BOLT - Special		4
29A	690-609	WASHER - (NAS1149F0332P)		4
29B	404-835	NUT - (MS20364-1032C)		4
30	62840-002	EYE BOLT - Turnbuckle, left		1
-30A	62840-003	EYE BOLT - Turnbuckle, right		1
31	62858-005	CHAIN - Control		2
32	489-910	BARREL - Turnbuckle (MS21251-B5S)		1
33	63927-000	BUMPER - Tee bar		1
34	63900-064	BUSHING - Tee bar bumper		1
35	68699-000	SPACER - Tee bar bumper		1
36	62833-023	WASHER - Tee bar bumper		1
37	411-539	SCREW - (MS35207-270)		1
37A	690-612	WASHER - (NAS1149F0363P)		1
37B	404-526	NUT - (MS21042-3)		1

-Item not illustrated

When ordering, always specify Part Number, Description, and Serial Number of Aircraft

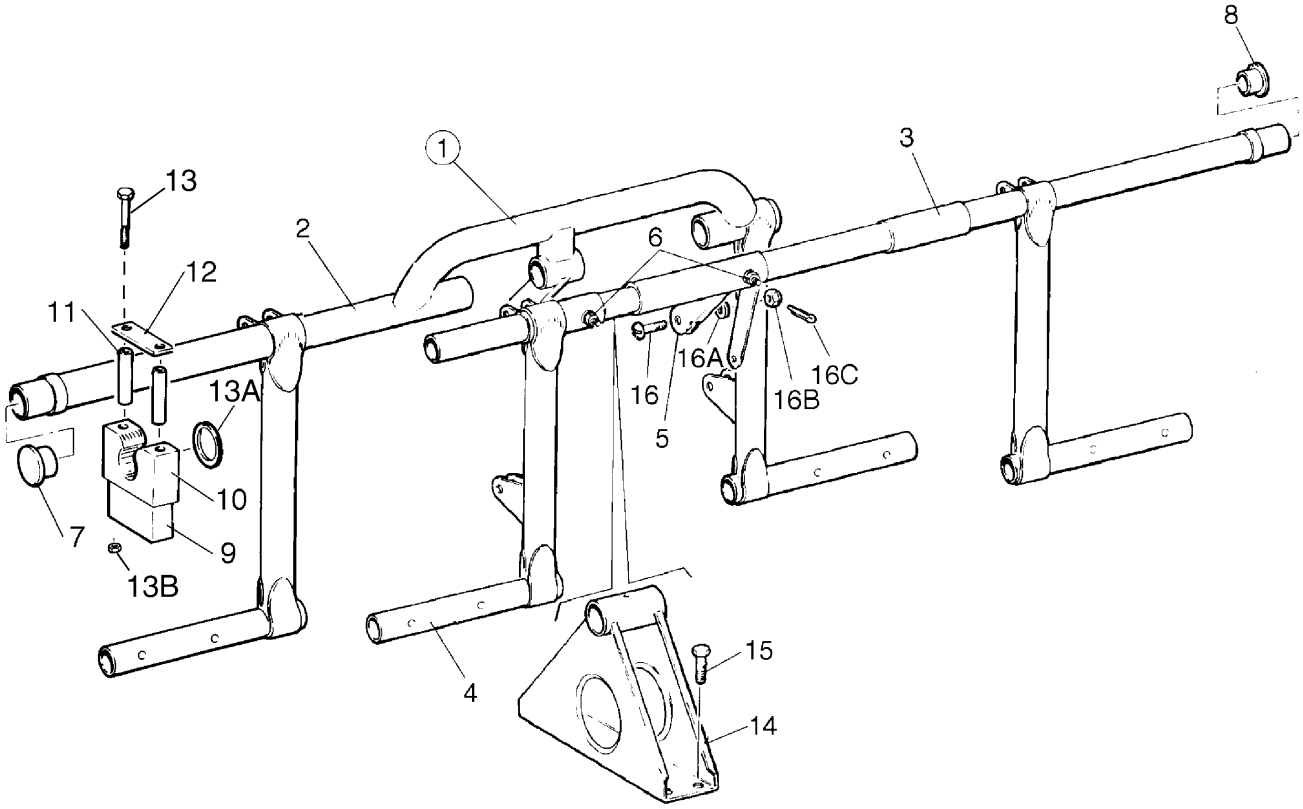

Figure 62. Rudder Pedal Installation

FIGURE ITEM	PART NUMBER	NOMENCLATURE	EFFECT FROM TO	UNITS PER ASSY
62	38542 (AM)	DRAWING - Control System Installation		
	63473 (AC)	DRAWING - Cylinder Assy - Dual Toe		
1	63459-018	RUDDER PEDAL ASSY - Complete		1
2	63420-007	. BAR ASSY - Rudder control, left		1
3	63419-002	. BAR ASSY - Rudder control, right		1
4	63458-004	. TUBE ASSY - Rudder control		1
5	63457-003	. ARM ASSY - Rudder control		1
6	402-314	. BOLT - (AN174-13A)		2
-6A	690-613	. WASHER - (NAS1149F0432P)		4
-6B	404-530	. NUT - (MS21042-4)		2
7	581-330	. PLUG - Rudder pedal assy		1
8	581-332	. PLUG - Rudder pedal assy		1
9	63456-000	BLOCK - Rudder bar support, bottom		2
10	65050-000	BLOCK - Rudder bar support, top		2
11	65003-003	BUSHING - Rudder bar support		4
12	63455-000	PLATE - Rudder bar support		6
13	400-456	BOLT - (AN3-31A)		4
13A	62833-017	WASHER - Rudder bar support		2
13B	404-526	NUT - (MS21042-3)		4
14	63451-000	SUPPORT ASSY - Rudder bar		1
15	400-438	BOLT - (AN3-4A)		4
16	400-673	BOLT - (AN23-11)		2
16A	690-612	WASHER - (NAS1149FN363P)		2
16B	404-392	NUT - (AN320-3)		2
16C	424-051	COTTER PIN - (MS24665-132)		2

-Item not illustrated

When ordering, always specify Part Number, Description, and Serial Number of Aircraft

THIS PAGE INTENTIONALLY LEFT BLANK

SECTION X
HYDRAULIC SYSTEM GROUP

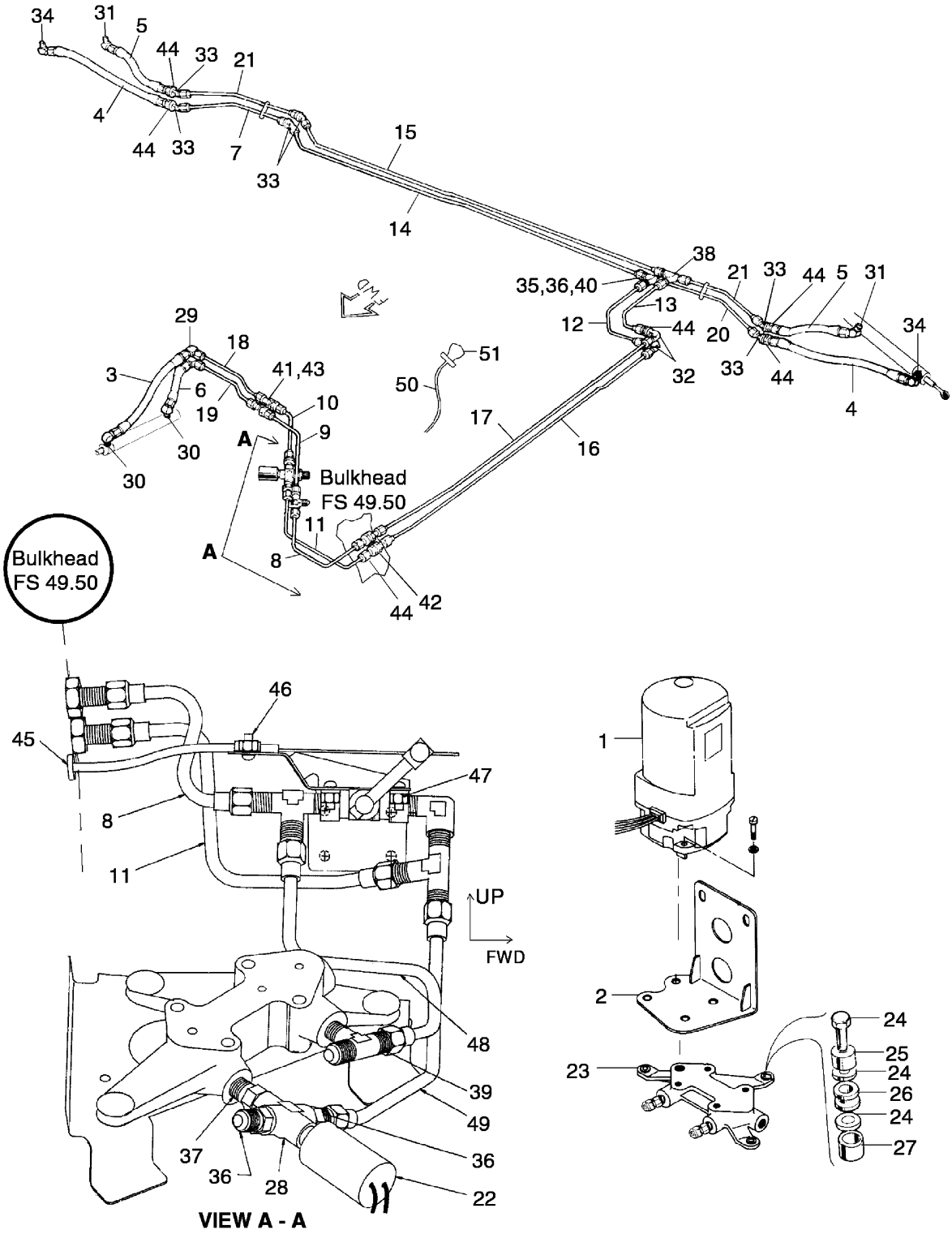

Figure 63. Hydraulic System Installation

FIGURE ITEM	PART NUMBER	NOMENCLATURE	EFFECT FROM TO	UNITS PER ASSY
63	38039 (BK)	DRAWING - Hydraulic Gear Installation		
1	38992-005	PUMP ASSY - Hydraulic	3246001 thru 3246017	1
1	38992-008	PUMP ASSY - Hydraulic	3246018 and up 3257001 and up	1
-1A	38998-005	. PUMP ASSY - Hydraulic	3246001 thru 3246017	1
-1A	38998-007	. PUMP ASSY - Hydraulic	3246018 and up 3257001 and up	1
-1B	488-363	. . SPLICE KNIFE		3
-1C	481-879	. . PUMP ASSY - (636294)	3246001 thru 3246017	1
-1C	481-880	. . PUMP ASSY - (636029)	3246018 and up 3257001 and up	1
-1D	683-208	. PLACARD - (87369-072)		1
2	38996-003	. BRACKET ASSY - Hydraulic pump mount		1
3	63901-009	HOSE ASSY - Nose gear cylinder	3246001 thru 3246017 3246154 and up	1
3	63901-030	HOSE ASSY - Nose gear cylinder	3246018 thru 3256153 3257001 thru 3257123	1
4	63901-021	HOSE ASSY - Main gear cylinder	3246001 thru 3246153 3257001 thru 3257123	2
4	63901-028	HOSE ASSY - Main gear cylinder	3246154 and up 3257124 and up	2
5	63901-030	HOSE ASSY - Main gear cylinder	3246001 thru 3246153 3257001 thru 3257123	2
5	63901-009	HOSE ASSY - Main gear cylinder	3246154 and up 3257124 and up	2
6	63901-031	HOSE ASSY - Nose gear cylinder		1
7	67700-007	TUBE ASSY - Main gear cylinder	3246001 thru 3246153 3257001 thru 3257123	1
7	67700-433	TUBE ASSY - Main gear cylinder	3246154 and up 3257124 and up	1
8	67700-407	TUBE ASSY - Nose gear cylinder, top		1
9	67700-107	TUBE ASSY - Nose gear cylinder, top		1
10	67700-108	TUBE ASSY - Nose gear cylinder, bottom		1
11	67700-406	TUBE ASSY - Nose gear cylinder, bottom		1
12	67700-329	TUBE ASSY - Nose gear cylinder, bottom		1
13	67700-330	TUBE ASSY - Nose gear cylinder, top		1
14	67700-409	TUBE ASSY - Main gear, bottom		1
15	67700-408	TUBE ASSY - Main gear, top		1
-15A	454-929	CLAMP		2
-15B	415-535	SCREW - (MS35206-245)		1
16	67700-416	TUBE ASSY - Nose gear, bottom		1
17	67700-416	TUBE ASSY - Nose gear, top		1
18	67700-118	TUBE ASSY - Nose gear, bottom		1
19	67700-119	TUBE ASSY - Nose gear, top		1
-19A	408-043	. WASHER - (MS35333-38)		1
-19B	603-344	. RIVNUT - (MS27130CR13K)		1
-19C	415-536	. SCREW - (MS35206-246)		1
-19D	454-929	. CLAMP		2
20	67700-124	TUBE ASSY - Main gear	3246001 thru 3246153 3257001 thru 3257123	1
20	67700-432	TUBE ASSY - Main gear	3246154 and up 3257124 and up	1

-Item not illustrated

When ordering, always specify Part Number, Description, and Serial Number of Aircraft

FIGURE ITEM	PART NUMBER	NOMENCLATURE	EFFECT FROM TO	UNITS PER ASSY
63-				
21	67700-006	TUBE ASSY - Main gear	3246001 thru 3246153 3257001 thru 3257123	2
21	67700-431	TUBE ASSY - Main gear	3246154 and up 3257124 and up	2
-21A	434-142	. GROMMET - (MS35489-22)		2
22	587-847	SWITCH - Pressure (211C243-12)		1
23	38995-002	PAD - Hydraulic pump mount		1
-23A	401-300	. BOLT - (AN4H-13A)		4
-23B	690-611	. WASHER - (NAS1149F0463P)		4
24	400-443	BOLT - (AN3-12A)		3
-24A	494-192	WASHER		6
25	65003-030	BUSHING		3
26	434-120	GROMMET - (MS35489-64)		3
27	65003-021	BUSHING		3
28	455-405	CROSS - (AN918-1D)		1
29	558-826	ELBOW - (AN821-4)		2
30	458-865	ELBOW - (AN823-4)		2
31	458-891	ELBOW - (AN823-4D)		2
32	458-900	ELBOW - (AN833-4D)		2
33	458-910	ELBOW - (AS1040D0404)	3246001 thru 3246153 3257001 thru 3257123	4
33	491-060	ELBOW - (AN832-4D)	3246154 and up 3257123 and up	4
34	458-894	ELBOW - (MS20822-4D)		2
35	67600-000	NIPPLE - Restricted		2
36	476-648	NIPPLE - (AN816-4D)		3
37	476-643	NIPPLE - (AN911-1D)		1
38	488-320	TEE - (AN824-4D)		1
39	488-499	TEE - (AN825-4D)		1
40	488-474	TEE - (AN917-1D)		1
41	491-063	UNION - (AN832-4)		2
42	491-060	UNION - (AN832-4D)		2
43	477-629	NUT - (AS5178-04)		2
-43A	690-630	WASHER - (NAS1149F0763P)		2
44	477-618	NUT - (AS5178004)		8
-44A	690-630	WASHER - (NAS1149F0763P)		12
45	453-732	GROMMET		1
46	66853-000	CLAMP		1
-46A	400-437	BOLT - (AN3-3A)		2
-46B	404-526	NUT - (MS21042-3)		2
47	89085-003	VALVE ASSY		1
-47A	554-707	CLAMP		2
-47B	400-437	BOLT - (AN3-3A)		2
-47C	404-526	NUT - (MS21042-3)		2
48	67700-405	TUBE ASSY		1
49	67700-404	TUBE ASSY		1
50	454-225	CABLE ASSY		1
-50A	63904-082	. TUBE		AR

-Item not illustrated

When ordering, always specify Part Number, Description, and Serial Number of Aircraft

FIGURE ITEM	PART NUMBER	NOMENCLATURE	EFFECT FROM TO	UNITS PER ASSY
63-				
-50B	454-887	. CLAMP		1
-50C	411-582	. SCREW - (MS35207-261)		1
-50D	690-609	. WASHER - (NAS1149F0332P)		1
51	571-140	KNOB - (RED)		1
-51A	96166-000	. CLIP - Retainer		1
-51B	96167-000	. RETAINER - Knob		1
-51C	404-224	. NUT - (AN315-3R)		1

-Item not illustrated

When ordering, always specify Part Number, Description, and Serial Number of Aircraft

GRIDS 2B22 THRU 2B24
INTENTIONALLY BLANK

SECTION XI
ENVIRONMENTAL GROUP

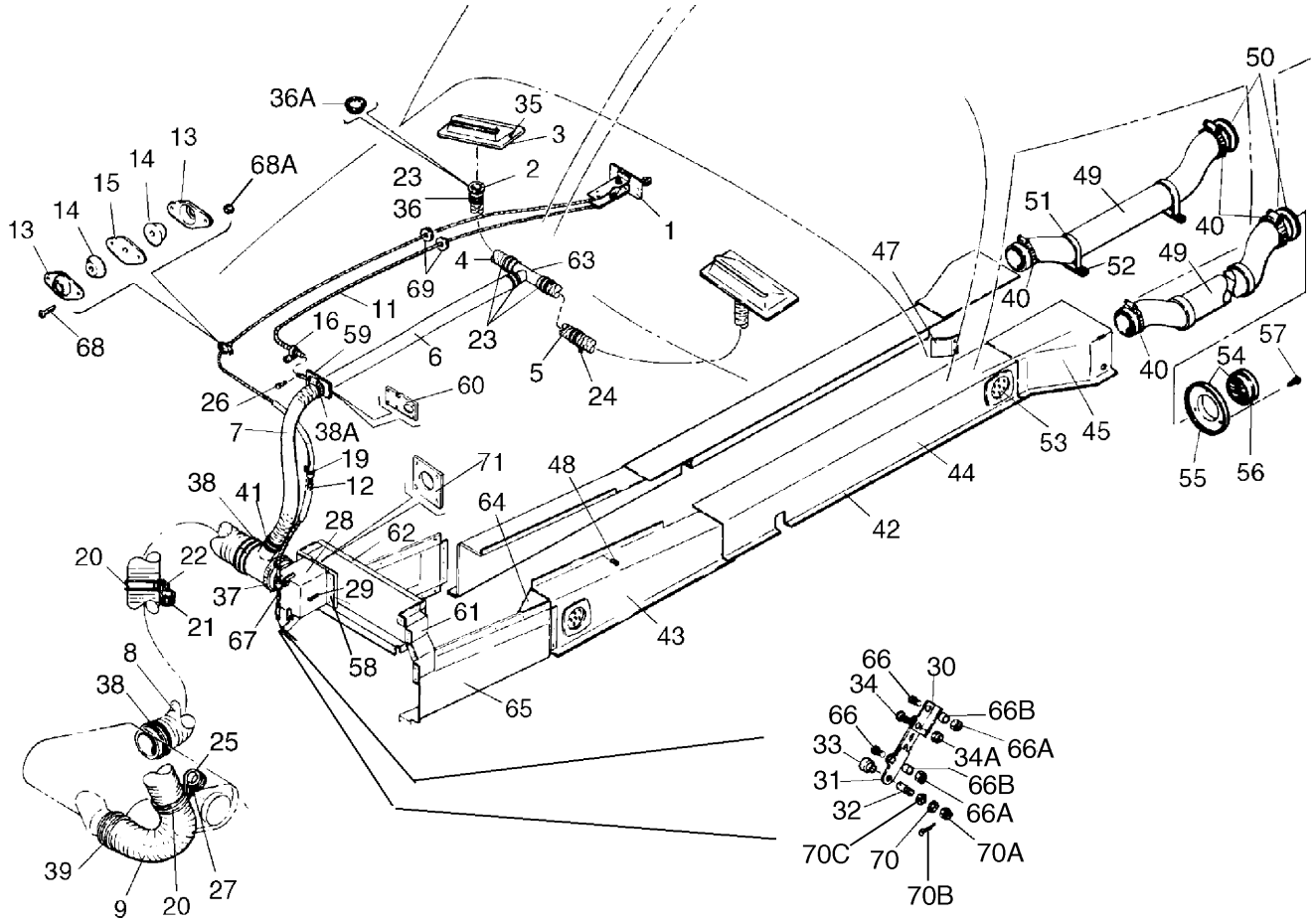

SEE FIGURE 47 FOR ENGINE EXHAUST SYSTEM
FOR SERIAL NUMBERS 3246001 AND UP

SEE FIGURE 64A FOR CABIN HEAT VENTILATION
FOR SERIAL NUMBERS 3257001 AND UP

Figure 64. Cabin Heat and Defroster System

FIGURE ITEM	PART NUMBER	NOMENCLATURE	EFFECT FROM TO	UNITS PER ASSY
64	38006 (AT)	DRAWING - Cabin Heat and Defroster System Installation		
1	79863-003	CONTROL ASSY - Heat and defroster		1
2	68908-000	OUTLET - Defroster air		2
3	65318-000	OUTLET - Defroster air		2
4	63633-030	HOSE - Defroster air		1
5	63633-212	HOSE - Defroster air		1
6	63633-066	HOSE - Defroster air		1
7	63633-204	HOSE - Defroster air	3246001 and up	1
8	63633-006	HOSE - Cabin heat	3246001 and up	RF
9	63633-033	HOSE - Cabin heat	3246001 and up	RF
11	554-375	CABLE ASSY - Defroster		1
12	554-487	CABLE ASSY - Cabin heat		1
13	66789-000	PLATE - Control cable, heat		2
14	68770-014	GROMMET - Control cable, heat		2
15	22105-003	GASKET - Control cable, heat		1
16	454-887	CLAMP - Cable		2
-16A	411-534	SCREW - (MS35207-265)		1
-16B	95061-025	SPACER		1
19	454-928	CLAMP - Cable		1
-19A	411-530	SCREW - (MS35207-261)		1
-19B	404-526	NUT - (MS21042-3)		1
20	554-859	CLAMP - (MS21919WH48)	3246001 and up	1
21	454-868	CLAMP - (AMMC-2)	3246001 and up	1
22	411-532	SCREW - (MS35207-263)	3246001 and up	1
-22A	404-526	NUT - (MS21042-3)	3246001 and up	1
23	554-839	CLAMP - (SAE-TY A 1 1/2)		3
24	554-885	CLAMP		1
-24A	411-530	SCREW - (MS35207-261)		1
-24B	404-526	NUT - (MS21042-3)		1
25	544-710	CLAMP		1
26	68904-000	BOLT - Defroster valve control		1
-26A	690-611	WASHER - (NAS1149F0463P)		1
-26B	404-530	NUT - (MS21042-4)		1
27	411-533	SCREW - (MS35207-264)		1
-27A	404-526	NUT - (MS21042-3)		1
-27B	690-609	WASHER - (NAS1149F0332P)		1
28	68919-000	BOX ASSY - Cabin heat		1
29	415-532	SCREW- (MS35206-242)		4
30	68918-000	LINK - Cabin heat box		1
31	36558-002	LINK - Cabin heat box		1
-31A	36558-009	LINK		1
32	70371-003	STUD - Cable attachment		1
33	70371-002	SWIVEL - Cable attachment		1
-33A	690-613	WASHER - (NAS1149F0432P)		1
34	415-518	SCREW - (MS35206-228)		1
34A	404-528	NUT - (MS21042-6)		1
35	415-518	SCREW - (MS35206-228)		4
-35A	404-528	NUT - (MS21042-6)		4
-35B	690-640	WASHER - (NAS1149FN632P)		5
36	419-648	SCREW - (6 x 3/8)		4
36A	406-394	NUT - (TIN C13900-014-4)		
37	654-001	CLAMP		1
38	654-160	CLAMP	3246001 and up	1
38A	654-160	CLAMP		2

-Item not illustrated

When ordering, always specify Part Number, Description, and Serial Number of Aircraft

FIGURE ITEM	PART NUMBER	NOMENCLATURE	EFFECT FROM TO	UNITS PER ASSY
64-				
39	554-772	CLAMP - (SAE TY-A3)		4
40	454-994	CLAMP		4
-40A	68921-000	TUBE - Spar box to hose air duct 63633-019		1
-40B	486-230	SCREW - (MS24621-29)		4
-40C	68925-000	CLIP		4
41	554-839	CLAMP - (SAE TY A1-1/2)	3246001 and up	1
42	68923-008	DUCT ASSY - Cabin heat, left	3246001 thru 3246017	1
42	68923-010	DUCT ASSY - Cabin heat, left	3246018 thru 3246217 3257001 thru 3257337	1
42	68923-012	DUCT ASSY - Cabin heat, left	3246218 and up 3257338 and up	1
-42A	68923-009	DUCT ASSY - Cabin heat, right	3246001 thru 3246017	1
-42A	68923-011	DUCT ASSY - Cabin heat, right	3246018 thru 3246217 3257001 thru 3257337	1
-42A	68923-013	DUCT ASSY - Cabin heat, right	3246218 and up 3257338 and up	1
43	68923-002	. DUCT - Cabin heat, left		1
-43A	68923-003	. DUCT - Cabin heat, right		1
44	68923-004	. DUCT - Cabin heat, left		1
-44A	68923-005	. DUCT - Cabin heat, right		1
45	68923-006	. DUCT - Cabin heat, left		1
-45A	68923-007	. DUCT- Cabin heat, right		1
47	69098-000	. PLATE - Deflector	3246001 thru 3246017	2
-47A	69098-002	. PLATE - Deflector	3246018 and up 3257001 and up	1
48	520-045	SCREW - (MS51861-34)		42
49	63633-019	HOSE - Air duct		2
50	69285-000	TUBE - Cabin heat		2
51	544-827	CLAMP - (MS21919WH34)		4
52	415-380	SCREW - (MS51958-64)		4
-52A	404-526	NUT - (MS21042-3)		4
-52B	404-263	NUT - (AN315D3R)		4
53	68933-000	DEFLECTOR ASSY		4
54	68928-000	DEFLECTOR ASSY		2
55	21156-000	. PLATE - Deflector		1
56	68929-000	LOUVER ASSY - Deflector		1
57	419-641	SCREW - (4 x 1/2, Type "A")		6
58	38204-000	ADAPTER - Cabin heat		1
59	38145-000	VALVE ASSY - Defroster		1
60	38145-006	. GASKET - Defroster valve		1
61	38147-000	DUCT ASSY - Defroster air, left		1
-61A	38147-001	DUCT ASSY - Defroster air, right		1
62	38148-000	DUCT ASSY - Defroster air		1
63	69556-006	TAKEOFF ASSY - Defroster air		1
64	38024-000	DUCT - Air, wheel well, left		1
-64A	38024-001	DUCT - Air, wheel well, right		1
65	38025-000	DUCT ASSY - Air, wheel well, left		1
-65A	38025-001	DUCT ASSY - Air, wheel well, right		1
66	415-520	SCREW - (MS35206-230)		2
66A	95061-141	SPACER		2
66B	404-528	NUT - (MS21042-6)		2
67	411-535	SCREW - (MS35207-266)		1
-67A	63900-136	BUSHING		1

-Item not illustrated

When ordering, always specify Part Number, Description, and Serial Number of Aircraft

FIGURE ITEM	PART NUMBER	NOMENCLATURE	EFFECT FROM TO	UNITS PER ASSY
64-				
-67B	404-526	NUT - (MS21042-3)		1
-67C	454-887	CLAMP		1
68	415-535	SCREW - (MS35206-245)		1
68A	404-529	NUT - (MS21042-08)		2
69	434-126	GROMMET - (MS35489-4)		2
70	690-612	WASHER - Cable attachment (NAS1149F0363P)		1
70A	404-392	NUT - (AN320-3)		1
70B	424-051	COTTER PIN - (MS24665-132)		1
70C	690-613	WASHER - (NAS1149F0432P)		1
71	38204-003	GASKET - Cabin heat box		1

-Item not illustrated

When ordering, always specify Part Number, Description, and Serial Number of Aircraft

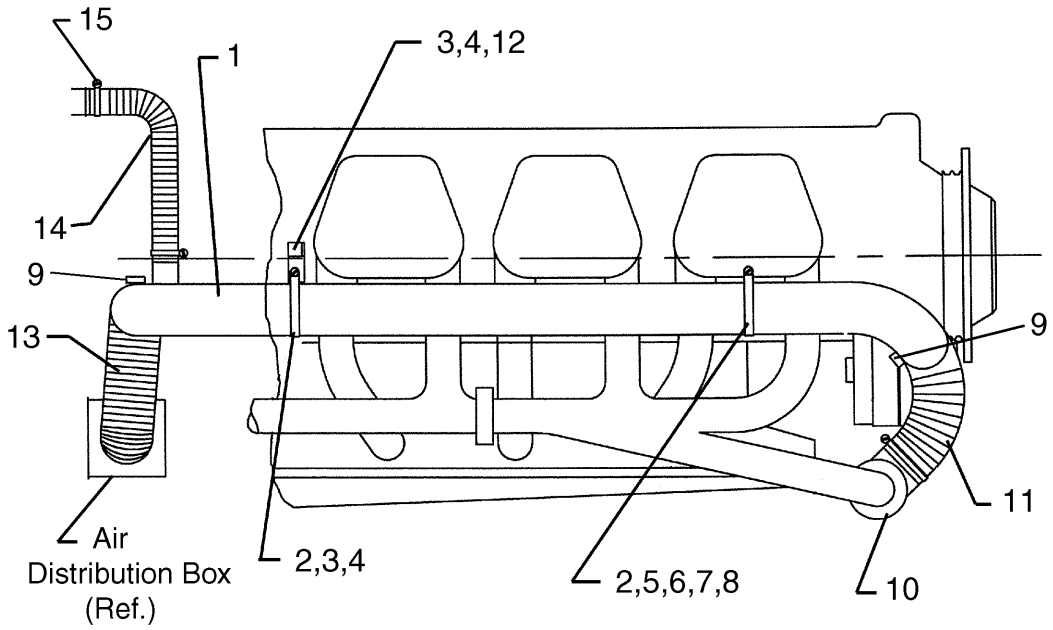

Figure 64A. Cabin Heat and Ventilation System Installation
(Serial Numbers 3257001 and up)

FIGURE ITEM	PART NUMBER	NOMENCLATURE	EFFECT FROM TO	UNITS PER ASSY
64A	100920 (AC)	DRAWING - Cabin Heat and Ventilation System Instl	3257001 and up	
1	100943-002	TUBE ASSY - Cabin Heat		1
2	654-211	CLAMP		2
3	411-532	SCREW - (MS 35207-263)		3
4	690-612	WASHER - (NAS 1149F0363P)		3
5	520-024	SCREW - (MS 35206-283)		1
6	408-051	WASHER - (MS 35333-40)		1
7	587-189	SPACER - (NAS 43HT4-20)		1
8	690-611	WASHER - (NAS 1149F0463P)		1
9	454-993	CLAMP - (SAE TY A-3 1/16)		4
10	104697-002	EXHAUST HEATER MUFF ASSY		1
-10a	411-532	SCREW - (MS 35207-263)		5
-10b	690-612	WASHER - (NAS 1149F0363P)		5
11	99849-030	HOSE		1
12	100942-002	BRACKET ASSY		1
13	63633-205	HOSE		1
14	63633-156	HOSE		1
15	554-865	CLAMP - (SAE TY A-1 9/16)		2
-16	63633-211	HOSE		1
-16a	654-177	CLAMP		2

-Item not illustrated

When ordering, always specify Part Number, Description, and Serial Number of Aircraft

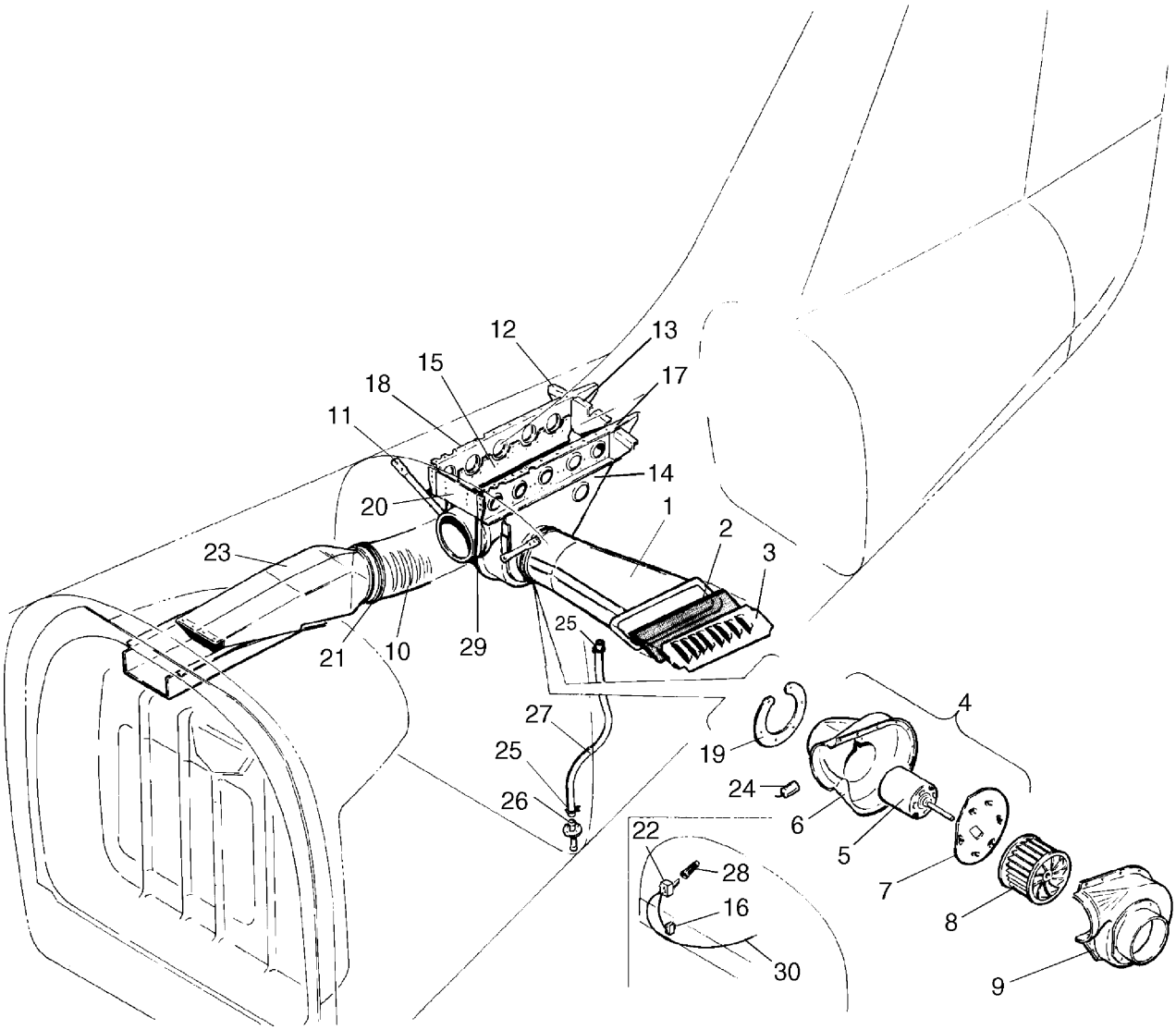

Figure 65. Aft Fresh Air Duct Installation

FIGURE ITEM	PART NUMBER	NOMENCLATURE	EFFECT FROM TO	UNITS PER ASSY
65	36983 (AN)	DRAWING - Ram Air and Blower Ventilation Installation		
	79266 (E)	DRAWING - Blower Assy - Evaporator		
1	36615-005	DUCT ASSY - Air vent		1
2	36616-003	. FILTER - Air vent		1
3	36612-002	LOUVER - Air vent		1
-3A	415-518	SCREW - (MS35206-228)		8
-3B	690-639	WASHER - (NAS1149FN616P)		8
-3C	404-528	NUT - (MS21042-06)		8
4	99642-002	BLOWER ASSY - Fresh air	3246001 thru 3246017	1
4	99642-004	BLOWER ASSY - Fresh air	3246018 and up 3257001 and up	1
5	475-210	. MOTOR ASSY - Fresh air blower	3246001 thru 3246017	1
5	761-778	. MOTOR ASSY - Fresh air blower	3246018 and up 3257001 and up	1
-5A	434-128	. GROMMET - (MS35489-6)		1
-5B	453-799	. PLUG		1
6	37997-002	. COVER - Fresh air blower		1
7	99641-000	. PLATE ASSY - Motor mounting		1
8	452-935	. BLOWER		1
9	79264-000	COVER ASSY		1
-9A	99633-000	DUCT		1
10	63633-148	HOSE	3246001 thru 3246125 3257001 thru 3257075	1
11	79303-000	BRACE - Hanger		2
-11A	411-532	SCREW - (MS35207-263)		6
-11B	690-609	WASHER - (NAS1149F0332P)		AR
-11C	406-636	NUT - (KAY H10-3)		6
12	79035-000	GUSSET ASSY - Intercostal		2
13	79286-000	BRACKET - Intercostal, aft		1
14	79281-000	HANGER ASSY - Blower, left		1
15	79282-000	HANGER ASSY - Blower, right		1
16	454-797	CIRCUIT BREAKER - 20 amp (See Figure 73-16)	3246001 thru 3246017	RF
16	454-732	CIRCUIT BREAKER - 10 amp (See Figure 73-16 and Figure 73A-23)	3246018 and up 3257001 and up	RF
17	79280-000	INTERCOSTAL - Blower bracket support, left		1
18	79287-000	INTERCOSTAL - Blower bracket support, right		1
19	79284-000	RETAINER - Housing		1
-19A	411-532	SCREW - (MS35207-263)		8
-19B	690-612	WASHER - (NAS1149F0363P)		8
20	79285-000	BRACKET - Intercostal, forward		1
21	554-640	CLAMP		1
22	688-298	SWITCH	3246018 thru 3246125 3257001 thru 3257075	1
-22A	472-200	BULB	3246018 thru 3246125 3257001 thru 3257075	2
-22B	89848-061	CAP	3246018 thru 3246125 3257001 thru 3257075	1
23	36615-005	DUCT ASSY - Aft		1
24	63897-006	CAPACITOR ASSY		1
25	554-575	CLAMP		2
26	79290-000	TUBE ASSY - Drain		1

-Item not illustrated

When ordering, always specify Part Number, Description, and Serial Number of Aircraft

FIGURE ITEM	PART NUMBER	NOMENCLATURE	EFFECT FROM TO	UNITS PER ASSY
65-				
27	63904-112	HOSE - Drain		1
-27A	454-930	CLAMP		1
-27B	411-532	SCREW - (MS35207-263)		1
-27C	406-636	NUT - (KAY H10-3)		1
28	571-162	KNOB		1
29	488-702	STRAP - Fresh air hose support (MS3367-1-9)		2
30	79293-002	CABLE - Blower	3246001 thru 3246017	1

-Item not illustrated

When ordering, always specify Part Number, Description, and Serial Number of Aircraft

THIS PAGE INTENTIONALLY LEFT BLANK

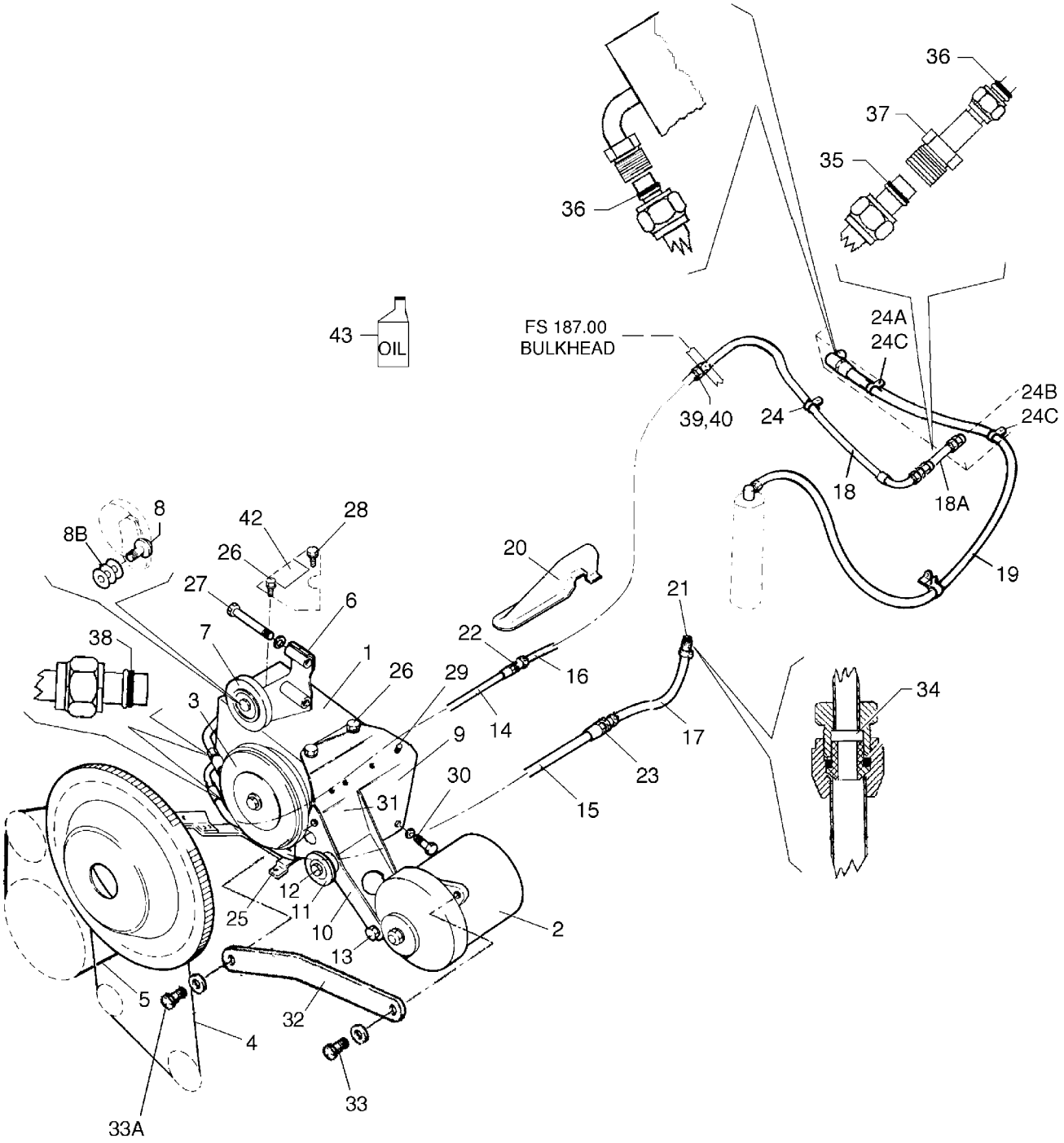

Figure 66. Air Conditioning Compressor and Alternator Installation
(Serial Numbers 3246001 thru 3246087 only)
Refrigerant Lines (Serial Numbers 3246001 and up and 3257001 and up)

FIGURE ITEM	PART NUMBER	NOMENCLATURE	EFFECT FROM TO	UNITS PER ASSY
66	99750 (V)	DRAWING - Air Conditioning Installation	3246001 thru 3246017	
	85506 (D)	DRAWING - Air Conditioning Installation	3246018 and up 3257001 and up	
	36949 (AP)	DRAWING - 90A Alternator Installation	3246001 thru 3246087	
	99109 (BK)	DRAWING - Compressor Installation	3246001 thru 3246087	
	99291 (AL)	DRAWING - Air Conditioning Refrigerant Lines Instl		
1	101173-006	COMPRESSOR ASSY	3246001 thru 3246017	1
1	101173-007	COMPRESSOR ASSY	3246018 thru 3246087	1
2	87415-003	ALTERNATOR	3246001 thru 3246017	1
2	87415-006	ALTERNATOR (Contact your Lycoming Parts Distributor for Serial Numbers 3246088 and up and 3257001 and up)	3246018 thru 3246087	1
3	554-761	CLUTCH ASSY	3246001 thru 3246017	1
3	687-703	CLUTCH ASSY	3246018 thru 3246087	1
4	73965-017	BELT - Alternator (564-885 may be used as an alternate)	3246001 thru 3246087	1
5	73965-010	BELT - Compressor	3246001 thru 3246087	1
5	73965-005	BELT - Compressor	3246001 thru 3246087	1
6	99763-000	BRACKET ASSY - Compressor, upper	3246001 thru 3246087	1
7	99080-000	. IDLER PULLEY ASSY - Compressor drive		1
8	400-616	. BOLT - (AN8H-7A)		1
-8A	690-631	. WASHER - (NAS1149F0863P)		1
8B	62833-083	. WASHER		3
9	39682-002	BRACKET ASSY - Compressor, lower	3246001 thru 3246087	1
10	85240-002	IDLER BRACKET ASSY - Alternator, lower	3246001 thru 3246087	1
10	85240-008	BRACKET ASSY - Alternator, lower (Used only without air conditioning)	3246001 thru 3246087	1
11	99080-004	IDLER PULLEY ASSY - Alternator drive	3246001 thru 3246087	1
-11A	99080-002	. IDLER		1
-11B	99046-005	. PULLEY		1
12	99529-000	. BOLT		1
-12A	62833-082	. WASHER - Alternator pulley		2
-12B	79558-002	. NUT - Alternator pulley		1
13	690-033	BOLT - (AN8H-6A)	3246001 thru 3246087	1
14	566-227	HOSE ASSY - Discharge	3246001 thru 3246017	1
14	84266-011	HOSE ASSY - Discharge	3246018 thru 3246087	1
15	565-426	HOSE ASSY - Suction	3246001 thru 3246017	1
15	84266-012	HOSE ASSY - Suction	3246018 thru 3246087	1
16	63904-092	HOSE ASSY - Discharge		1
17	63904-068	HOSE ASSY - Suction		1
18	566-257	HOSE ASSY	3246001 thru 3246017	1
18	84266-019	HOSE ASSY (566-419) (Refer to Piper Service Letter 1033 - latest revision)	3246018 and up 3257001 and up	1
18A	83744-172	TUBE ASSY	3246001 thru 3246017	1
19	566-256	HOSE ASSY - Receiver dehydrator to condenser	3246001 thru 3246017	1
19	84266-005	HOSE ASSY - Receiver dehydrator to condenser	3246018 and up 3257001 and up	1
20	99497-000	COVER - Refrigerant line		2
-20A	99787-000	COVER - Refrigerant line		2
21	561-012	FITTING - (FC 9158-0808S)	3246001 thru 3246017	1
-21A	584-258	REDUCER - (661 FHD-8-10)	3246001 thru 3246017	1

-Item not illustrated

When ordering, always specify Part Number, Description, and Serial Number of Aircraft

FIGURE ITEM	PART NUMBER	NOMENCLATURE	EFFECT FROM TO	UNITS PER ASSY
66-				
22	561-013	FITTING - (FC9158-0606S)	3246001 thru 3246087	2
22	561-013	FITTING - (FC9158-0606S)	3246088 and up 3257001 and up	1
-22A	584-256	REDUCER - (42F-8-6)	3246001 thru 3246087	2
-22A	584-256	REDUCER - (42F-8-6)	3246088 and up 3257001 and up	1
23	561-012	FITTING - (FC9158-0808S)	3246001 thru 3246017	1
-23A	584-257	REDUCER - (42F-10-8)	3246001 thru 3246087	1
24	554-735	CLAMP	3246001 thru 3246017	3
24	454-868	CLAMP (Refer to Piper Service Letter 1033 - latest revision)	3246018 and up 3257001 and up	1
24A	454-932	CLAMP	3246001 thru 3246017	1
24A	454-977	CLAMP	3246018 and up 3257001 and up	1
24B	454-932	CLAMP	3246001 thru 3246017	
24B	454-862	CLAMP	3246018 and up 3257001 and up	1
24C	63900-127	BUSHING - under clamp		2
25	98680-004	BRACKET ASSY - Engine control support	3246001 thru 3246087	1
-25A	401-986	BOLT - (MS20074-06-05)	3246001 thru 3246087	2
-25B	690-620	WASHER - (NAS1149F0632P)	3246001 thru 3246087	2
26	401-987	BOLT - (MS20074-06-06)	3246001 thru 3246087	3
-26A	690-620	WASHER - (NAS1149F0632P)	3246001 thru 3246087	AR
-26B	407-046	WASHER - (MS35338-46)	3246001 thru 3246087	AR
27	401-461	BOLT - (AN6H22A)	3246001 thru 3246087	2
-27A	690-629	WASHER - (NAS1149F0663P)	3246001 thru 3246087	AR
-27B	690-620	WASHER - (NAS1149F0632P)	3246001 thru 3246087	2
-27C	407-046	WASHER - (MS35338-46)	3246001 thru 3246087	2
28	401-992	BOLT - (MS20074-06-07)	3246001 thru 3246087	1
-28A	690-620	WASHER - (NAS1149F0632P)	3246001 thru 3246087	AR
-28B	407-046	WASHER - (MS35338-46)	3246001 thru 3246087	AR
29	401-970	BOLT- (MS20074-05-05)	3246001 thru 3246087	4
-29A	690-619	WASHER - (NAS1149F0532P)	3246001 thru 3246087	4
30	401-988	BOLT - (MS20074-06-11)	3246001 thru 3246087	1
30	693-214	BOLT - (MS20074-06-12)	3246001 thru 3246087	3
-30A	690-620	WASHER - (NAS1149F0632P)	3246001 thru 3246087	1
-30B	407-046	WASHER - (MS35338-46)	3246001 thru 3246087	1
31	39887-002	BRACKET - Alternator, upper	3246001 thru 3246087	1
-31A	401-546	BOLT - (AN7-46A)	3246001 thru 3246087	2
-31B	690-630	WASHER - (NAS1149F0763P)	3246001 thru 3246087	2
-31C	404-891	NUT - (MS20365-720C)	3246001 thru 3246087	2
32	39888-003	ARM - Alternator support	3246001 thru 3246087	1
33	401-992	BOLT - (MS20074-06-07)	3246001 thru 3246087	1
33A	401-187	BOLT - (AN5-7A)	3246001 thru 3246087	1
-33B	407-566	WASHER - AN960-516)	3246001 thru 3246087	1
34	651-556	FITTING ASSY - (AE3787-8H) (O-Ring furnished with fitting)	3246018 and up 3257001 and up	1
35	485-196	O-RING - (7470-013)	3246018 thru 3246087	2
35	485-196	O-RING - (7470-013)	3246088 and up 3257001 and up	1
36	485-197	O-RING - (7470-011)	3246018 and up 3257001 and up	2

-Item not illustrated

When ordering, always specify Part Number, Description, and Serial Number of Aircraft

FIGURE ITEM	PART NUMBER	NOMENCLATURE	EFFECT FROM TO	UNITS PER ASSY
66-				
37	491-172	REDUCER	3246001 thru 3246017	1
37	603-500	UNION - (P37246)	3246018 and up 3257001 and up	1
38	485-198	O-RING - Suction line	3246018 thru 3246087	1
39	561-013	FITTING		2
-39A	584-256	REDUCER		2
40	189-625	GROMMET	3246018 and up 3257001 and up	AR
42	69669-204	PLACARD - Attn: This air conditioning system serviced...	3246018 and up	1
43	923-384	REFRIGERATION OIL - 14 ounce bottle (Approved for usage R134a systems)	3246018 and up	1

-Item not illustrated

When ordering, always specify Part Number, Description, and Serial Number of Aircraft

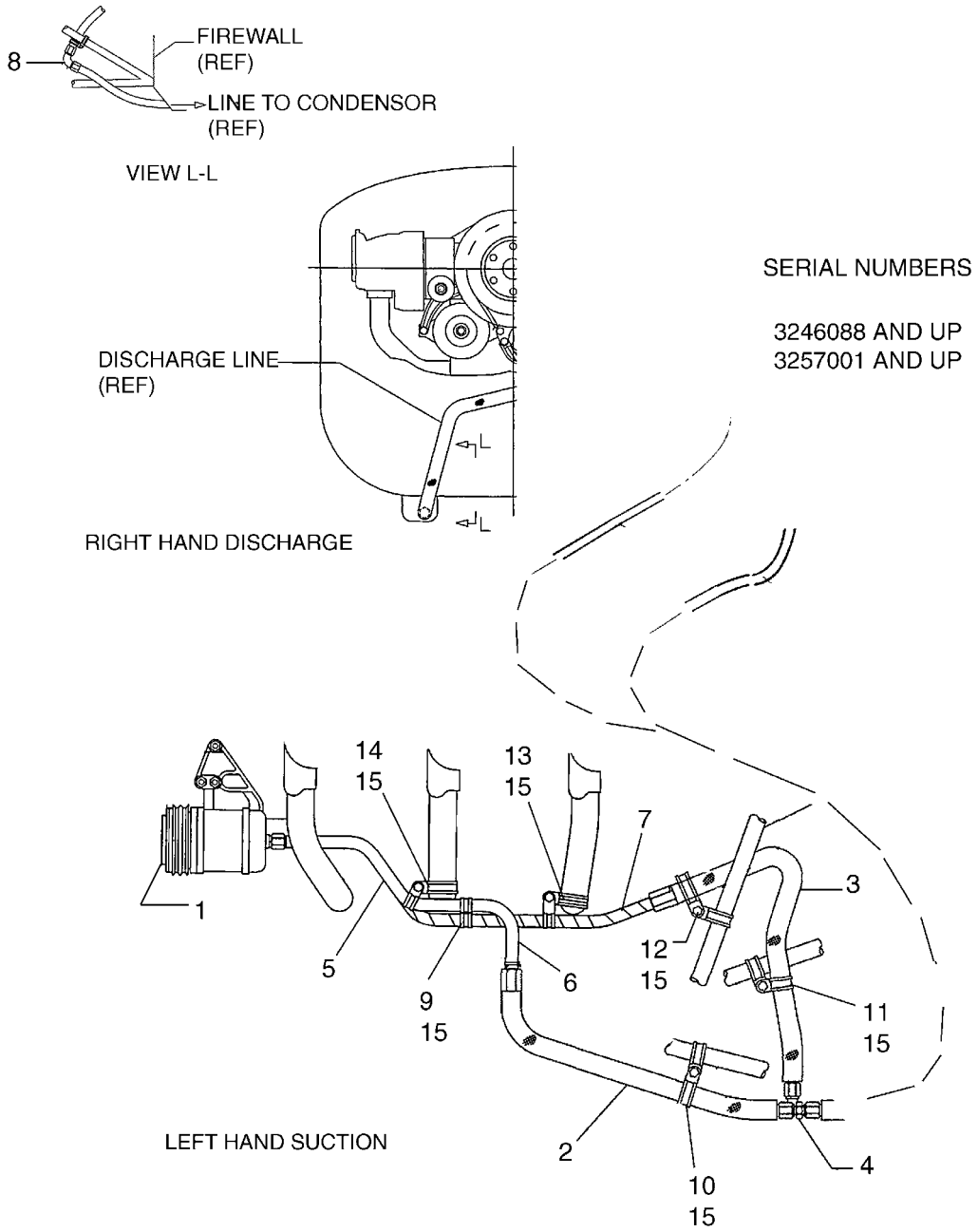

Figure 66A. Air conditioning Compressor Installation - Fwd of Firewall
(Serial Numbers 3246088 and up and 3257001 and up)

FIGURE ITEM	PART NUMBER	NOMENCLATURE	EFFECT FROM TO	UNITS PER ASSY
66A-	100920 (V)	DRAWING - Air Conditioning-Fwd of Firewall	3246088 and up 3257001 and up	
1	100821-003	AIR CONDITIONING COMPRESSOR ASSY		1
2	566-334	SUCTION LINE		1
3	566-342	DISCHARGE LINE		1
4	584-257	REDUCER		1
5	100920-008	HEAT SHIELD		1
6	100920-009	HEAT SHIELD		1
7	100920-010	HEATSHIELD - Discharge line		1
8	559-068	ELBOW - Discharge line		1
9	455-006	CLAMP - (MS21919WH16)		1
9	455-008	CLAMP - (MS21919WH14)		1
10	454-852	CLAMP - Suction line		1
10	454-868	CLAMP - Suction line		1
11	554-775	CLAMP		1
11	454-868	CLAMP		1
12	654-168	CLAMP - (MS21919WH15)		1
12	454-008	CLAMP - (MS21919WH12)		1
13	554-845	CLAMP		2
13	454-862	CLAMP		1
14	554-845	CLAMP		1
14	454-977	CLAMP		1
15	411-532	SCREW - (MS35207-263)		6
-15A	690-612	WASHER - (NAS1149F0363P)		6
-15B	406-443	NUT - (NAS679A3W)		6

-Item not illustrated

When ordering, always specify Part Number, Description, and Serial Number of Aircraft

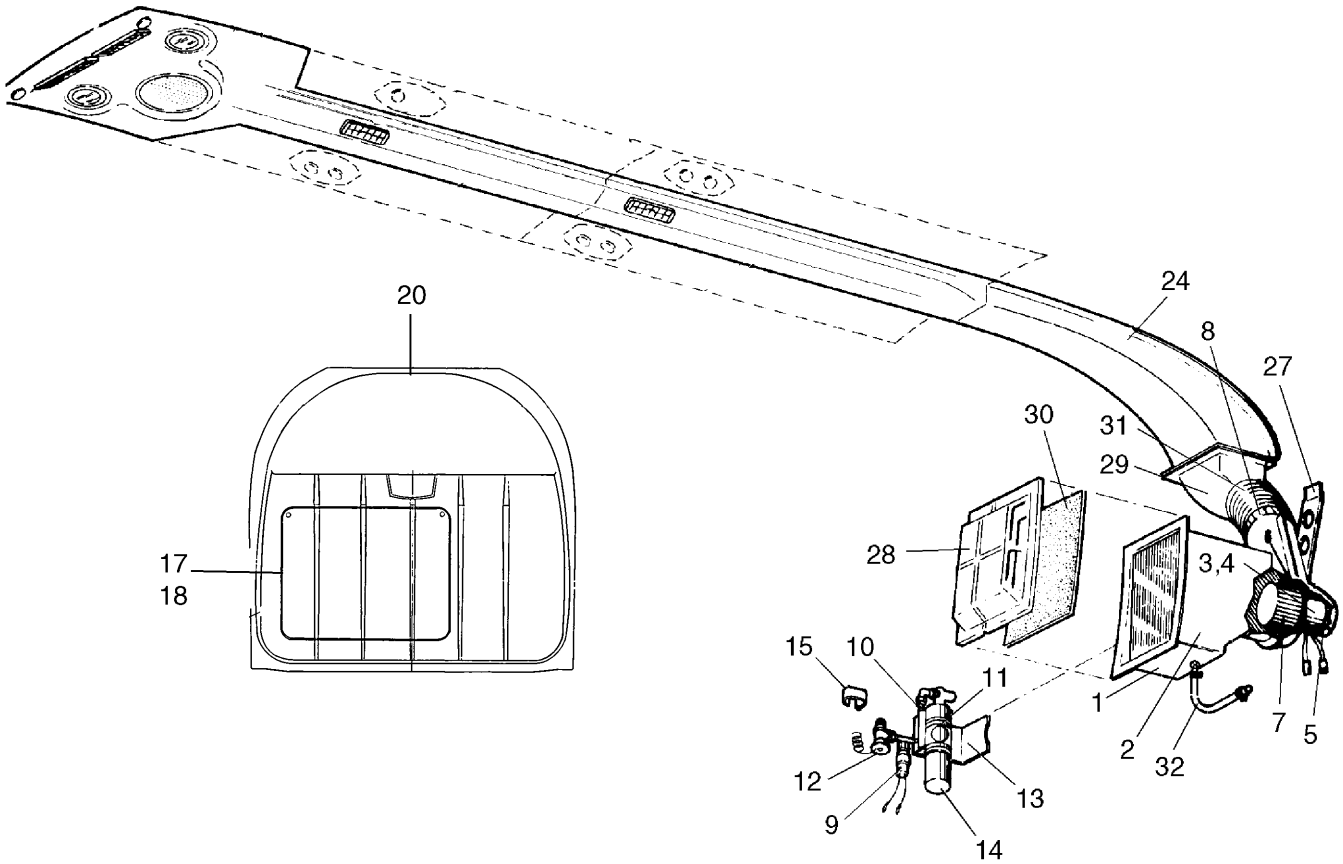

Figure 67. Air Conditioning Duct and Evaporator Installation

FIGURE ITEM	PART NUMBER	NOMENCLATURE	EFFECT FROM TO	UNITS PER ASSY
67-	78734 (V)	DRAWING - Bulkhead Installation - Cabin, aft		
	79849 (AE)	DRAWING - Evaporator Bulkhead Assy		
	79841 (L)	DRAWING - Evaporator Assy, Air Condition		
1	99640-000	EVAPORATOR ASSY - Air conditioning (complete)	3246001 thru 3246017	1
1	99640-008	EVAPORATOR ASSY - Air conditioning (complete)	3246018 and up 3257001 and up	1
2	99640-003	. EVAPORATOR ASSY - Air conditioning	3246001 thru 3246017	1
2	99640-009	. EVAPORATOR ASSY - Air conditioning	3246018 and up 3257001 and up	1
-2A	99639-000	. . EVAPORATOR - Coil, air conditioning	3246001 thru 3246017	1
-2A	552-201	. . EVAPORATOR - Coil, air conditioning	3246018 and up 3257001 and up	
-2B	99640-005	. . HOUSING ASSY		1
-2C	99643-005	. . . DRAIN ASSY		1
-2D	689-064	. . . . DRAIN TUBE		1
-2E	99637-000	. . COVER		1
3	99642-002	. BLOWER ASSY - Evaporator	3246001 thru 3246017	1
3	99642-004	. BLOWER ASSY - Evaporator	3246018 and up 3257001 and up	1
4	475-210	. . MOTOR ASSY - Evaporator blower	3246001 thru 3246017	1
4	761-778	. . MOTOR ASSY - Evaporator blower	3246018 and up 3257001 and up	1
5	37997-002	. . COVER - Evaporator blower		1
-6	99641-000	. . PLATE ASSY - Motor mounting		1
7	452-935	. BLOWER		1
8	99633-000	. DUCT - Hose connect		1
-8A	62833-125	. WASHER		22
9	99646-002	. SWITCH ASSY - Pressure (99646-003 also may be used)	3246001 thru 3246017	1
9	688-425	. SWITCH ASSY - Pressure	3246018 and up 3257001 and up	1
10	589-688	. LINE ASSY - Evaporator inlet	3246001 thru 3246017	1
10	689-106	. LINE ASSY	3246018 and up 3257001 and up	1
11	654-001	. CLAMP		2
12	99648-000	. VALVE ASSY - Evaporator expansion	3246001 thru 3246017	1
12	592-633	. VALVE ASSY - Evaporator expansion	3246018 and up 3257001 and up	1
13	99650-000	. BRACKET - Receiver dehydrator		1
-13A	415-499	. SCREW - (MS35207-243)		3
-13B	690-616	. WASHER - (NAS1149FN832P)		3
-13C	404-529	. NUT - (MS21042-08)		3
14	456-615	. RECEIVER DEHYDRATOR	3246001 thru 3246017	1
14	602-275	. RECEIVER DEHYDRATOR	3246018 and up 3257001 and up	
15	99661-000	. CLAMP - Bulb, expansion valve		1
-16	79445-000	DOOR ASSY	3246001 thru 3246017	1
-16	79445-005	DOOR ASSY	3246018 and up 3257001 and up	1
17	79445-002	. DOOR	3246001 thru 3246017	1
17	79445-008	. DOOR	3246018 and up 3257001 and up	
18	79445-004	. SEAL		1

-Item not illustrated

When ordering, always specify Part Number, Description, and Serial Number of Aircraft

FIGURE ITEM	PART NUMBER	NOMENCLATURE	EFFECT FROM TO	UNITS PER ASSY
67-				
-19	79837-002	HATSHELF ASSY	3246001 thru 3246017	1
-19	79837-013	HATSHELF ASSY	3246018 and up 3257001 and up	1
20	79837-000	. HATSHELF	3246001 thru 3246017	1
20	79837-014	. HATSHELF	3246018 and up 3257001 and up	
-20A	79837-009	. GASKET	3246001 thru 3246017	1
24	79839-003	DUCT ASSY - Air conditioner		1
27	99539-000	SUPPORT ASSY - Evaporator box		1
28	99550-002	COVER - Evaporator filter		1
29	79840-004	DUCT ASSY - Hose connect		1
30	99644-000	FILTER - Evaporator		1
31	63633-100	HOSE - Air conditioning		1
32	63913-199	HOSE - Evaporator drain		1

-Item not illustrated

When ordering, always specify Part Number, Description, and Serial Number of Aircraft

THIS PAGE INTENTIONALLY LEFT BLANK

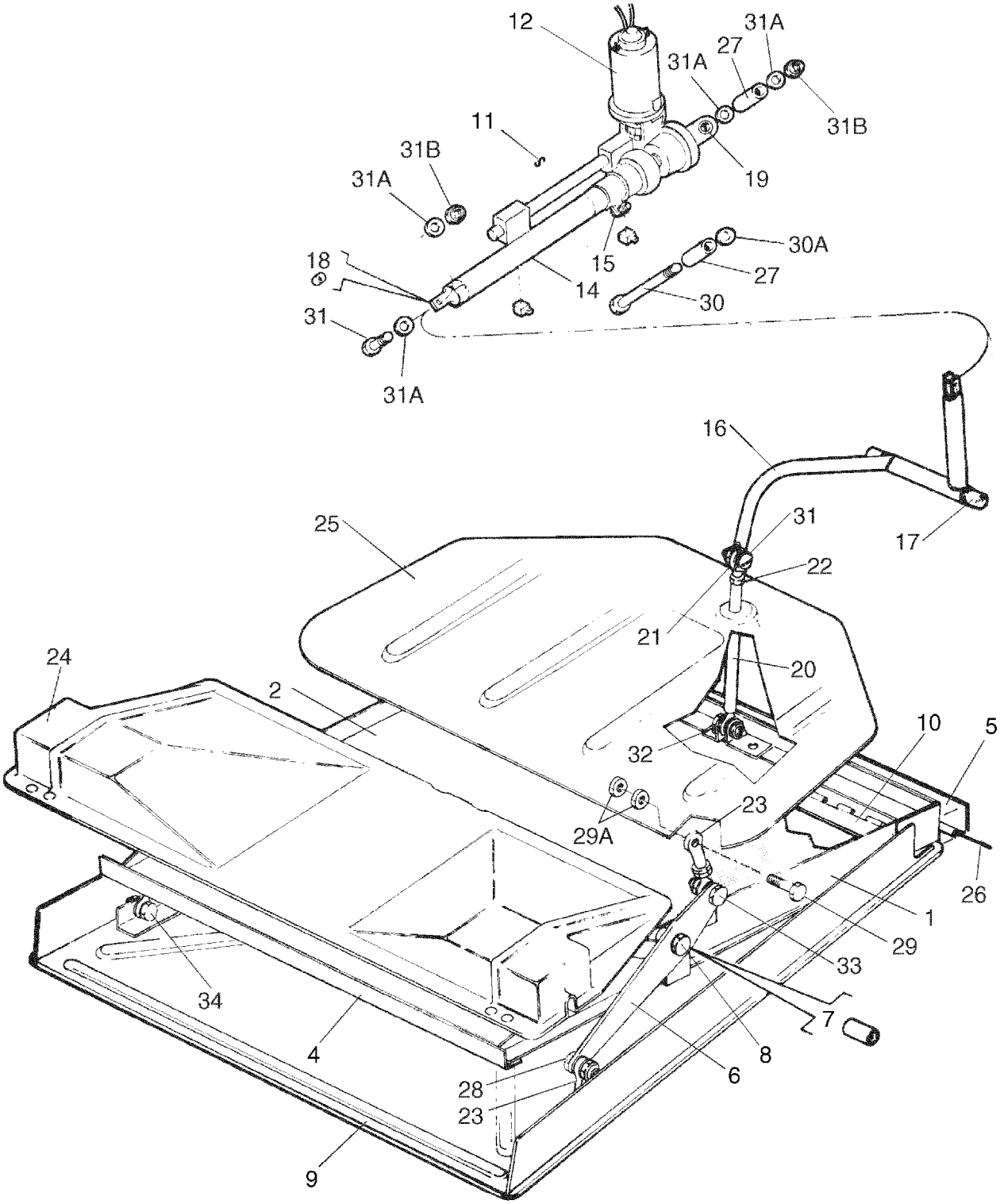

Figure 68. Air Conditioning Condenser Installation

FIGURE ITEM	PART NUMBER	NOMENCLATURE	EFFECT FROM TO	UNITS PER ASSY
68	99387 (Y)	DRAWING - Condenser Assy		
	99549 (Y)	DRAWING - Condenser Frame Installation, Air Cond.		
	99855 (AE)	DRAWING - Air Conditioning Condenser Installation		
1	99387-004	CONDENSER ASSY - Air conditioning (complete)	3246001 thru 3246017	1
1	99387-005	CONDENSER ASSY - Air conditioning (complete)	3246018 and up 3257001 and up	1
-1A	99387-000	CONDENSER ASSY - Air conditioing (complete)	3246001 thru 3246017	1
2	557-449	. CONDENSER	3246001 thru 3246017	1
2	84267-002	. CONDENSER	3246018 and up 3257001 and up	1
-3	99387-002	. FRAME ASSY - Condenser	3246001 thru 3246017	1
-3	99387-006	. FRAME ASSY - Condenser	3246018 and up 3257001 and up	1
4	99263-000	. . HINGE ASSY - Condenser duct		1
5	99275-002	. . HINGE - Half		1
6	99495-000	. . BELLCRANK ASSY - Condenser door mechanism		2
7	65003-056	. . BUSHING	3246001 thru 3246017	2
8	401-273	. . BOLT - (AN3-14A)	3246001 thru 3246017	2
-8A	690-609	. . WASHER - (NAS1149F0332P)	3246001 thru 3246017	AR
-8B	404-526	. . NUT - (MS21042-3)	3246001 thru 3246017	2
9	99275-002	. . HINGE - Half		1
10	99271-000	DOOR ASSY - Louver		1
11	99854-000	ACTUATOR ASSY - Condenser door	3246001 thru 3246017	1
11	99854-002	ACTUATOR ASSY - Condenser door	3246018 and up 3257001 and up	1
12	451-829	. MOTOR ASSY - Actuator	3246001 thru 3246017	1
12	466-401	. MOTOR ASSY - Actuator	3246018 and up 3257001 and up	1
14	99853-000	. TUBE ASSY - Actuator		1
15	554-715	. CLAMP - (AN741-8P)		1
-15A	400-004	. BOLT - (AN4-7A)		1
-15B	690-611	. WASHER - (NAS1149F0463P)		1
-15C	404-530	. NUT - (MS20365-428C)		1
16	99867-000	BELLCRANK ASSY - Condenser	3246001 thru 3246017	1
16	99867-005	BELLCRANK ASSY - Condenser	3246018 and up 3257001 and up	1
17	452-570	. BUSHING - Bronze (FF 565-2)		2
18	452-571	BEARING - (AA-225-1)		1
19	452-561	BEARING - (AA304-20)		1
20	99557-000	ROD ASSY - Condenser push	3246001 thru 3246017	1
20	99557-004	ROD ASSY - Condenser push	3246018 and up 3257001 and up	1
21	452-558	. BEARING - Rod end		2
22	400-224	. NUT - (AN315-3R)		1
23	99561-000	BEARING ASSY - Condenser door actuating		4
24	99572-004	COVER ASSY - Forward	3246001 thru 3246017	1
24	99572-006	COVER ASSY - Forward	3246018 and up 3257001 and up	1
25	99569-000	COVER ASSY - Aft	3246001 thru 3246017	1
25	99569-003	COVER ASSY - Aft	3246018 and up 3257001 and up	1
26	99275-004	PIN - Hinge		1
27	65165-087	TUBE		2

-Item not illustrated

When ordering, always specify Part Number, Description, and Serial Number of Aircraft

FIGURE ITEM	PART NUMBER	NOMENCLATURE	EFFECT FROM TO	UNITS PER ASSY
68-				
28	400-861	BOLT - (AN23-13A)		AR
-28A	690-612	WASHER - (NAS1149FN363P)		AR
-28B	62833-101	WASHER - (.56 O.D.)		AR
-28C	404-526	NUT - (MS21042-3)		AR
29	400-441	BOLT - (AN3-6A)		2
29A	690-612	WASHER - (NAS1149FN363P)		AR
-29B	404-526	NUT - (MS21042-3)		2
30	401-334	BOLT- (AN4-36A)		1
30A	690-611	WASHER - (NAS1149F0463P)		3
-30B	404-530	NUT - (MS21042-4)		1
31	400-861	BOLT - (AN23-13A)		AR
31A	690-612	WASHER - (NAS1149FN363P)		AR
31B	404-526	NUT - (MS21042-3)		2
32	401-269	BOLT - (AN3-10A)		1
-32A	690-612	WASHER - (NAS1149FN363P)		AR
-32B	404-526	NUT - (MS21042-3)		1
33	400-440	BOLT - (AN3-6A)		2
-33A	690-612	WASHER - (NAS1149FN363P)		AR
-33B	404-835	NUT - (MS20364-1032C)		2
34	400-861	BOLT - (AN23-13A)		2
-34A	690-612	WASHER - (NAS1149FN363P)		AR
-34B	62833-101	WASHER - (.56 O.D.)		AR
-34C	404-526	NUT - (MS21042-3)		2

-Item not illustrated

When ordering, always specify Part Number, Description, and Serial Number of Aircraft

THIS PAGE INTENTIONALLY LEFT BLANK

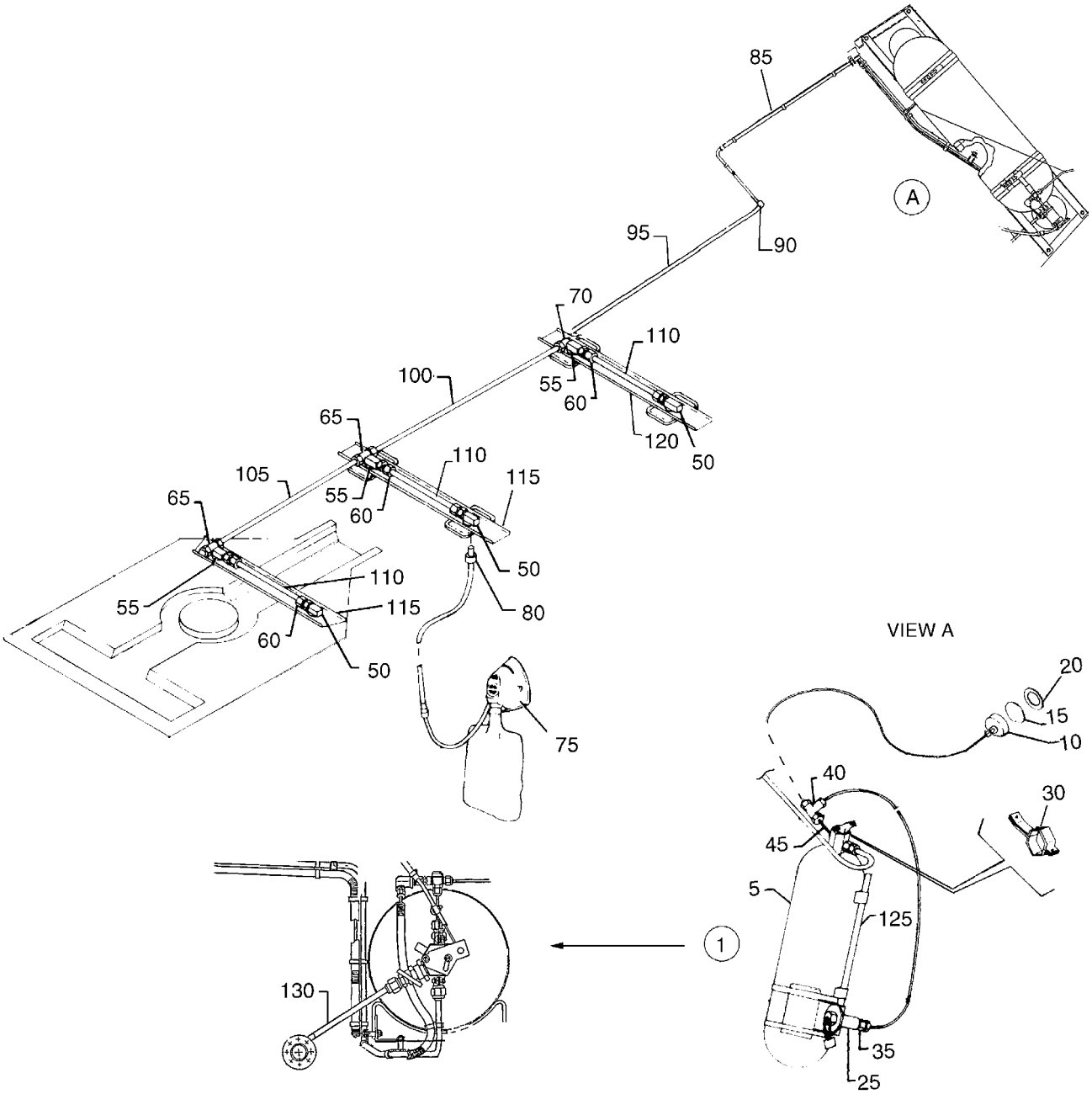

Figure 68A. Oxygen System Installation
(Serial Numbers 3257001 and up)

FIGURE ITEM	PART NUMBER	NOMENCLATURE	EFFECT FROM TO	UNITS PER ASSY
68A	100946 (H)	DRAWING - Oxygen System Installation	3257001 and up	
1	36964-008	OXYGEN KIT		1
5	767-203	* CYLINDER AND REGULATOR ASSY (895-24050)		1
10	755-101	* GAUGE ASSY - Oxygen (includes mounting bracket) (800435-01)		1
15	752-355	* * LENS - Oxygen Gauge (1375300-AG92)		1
20	758-558	* * BEZEL - Oxygen Gauge (802818-01)		1
25	756-524	* CHARGING VALVE ASSY (26875-48)		1
30	753-437	* BRACKET ASSY - Control Cable (800356-00)		1
35	763-310	* CONNECTOR - Female (33525-202)		1
40	--- ---	* TEE - (804717-01)		1
45	762-024	* TUBE ASSY - High Pressure (800214-06)		1
50	752-609	* OUTLET ASSY - Oxygen, Left (23599-11)		3
55	752-610	* OUTLET ASSY - Oxygen, Right (23599-12)		3
60	753-944	* CONNECTOR - Male - Low Pressure (33529-009)		6
65	756-301	* TEE - Low Pressure (33529-805)		2
70	754-761	* ELBOW - Low Pressure (33526-106)		1
75	474-124	* SKY MASK - Oxygen, (passenger) (28314-11)		5
-75A	761-744	* MASK ASSY - Oxygen, Duo-seal Mask (with Microphone (28316-11)		1
80	753-939	* MASK CONNECTOR - Oxygen plug-in (8570-00)		1
85	36960-026	TUBE - Low Pressure		1
90	--- ---	UNION - (33529-704)		1
95	36960-009	TUBE - Low Pressure		1
100	36960-008	TUBE - Low Pressure		1
105	36960-007	TUBE - Low Pressure		1
110	36960-006	TUBE - Low Pressure		3
115	36950-002	CHANNEL - Outlet, Overhead Panel		1
120	36951-002	CHANNEL - Outlet		2
125	36956-007	SHELF ASSY - Oxygen Tank Support		1
130	63901-181	TUBE ASSY		1

-Item not illustrated

When ordering, always specify Part Number, Description, and Serial Number of Aircraft

GRIDS 2D4 THRU 2D24
INTENTIONALLY BLANK

SECTION XII
ELECTRICAL GROUP

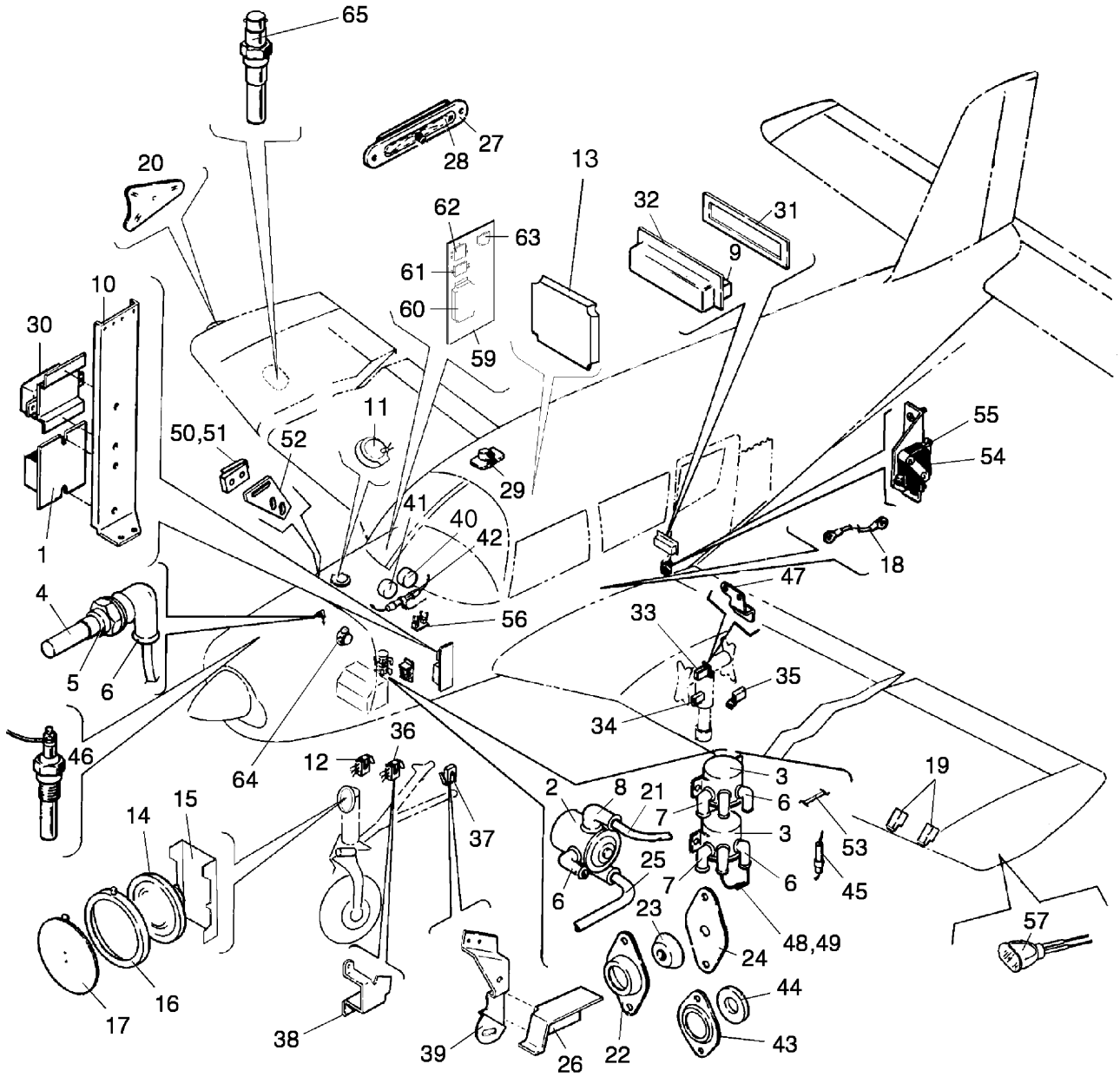

Figure 69. Electrical System Installation

FIGURE ITEM	PART NUMBER	NOMENCLATURE	EFFECT FROM TO	UNITS PER ASSY
69	85295 (F)	DRAWING - Electrical Installation	3246001 thru 3246017	
	85455 (G)	DRAWING - Electrical Installation	3246018 thru 3246087	
	36949 (AN)	DRAWING - Alternator Installation	3246001 thru 3246087	
	100838 (P)	DRAWING - Electrical Installation	3246088 thru 3246125	
			3257001 thru 3257075	
	101300 (M)	DRAWING - Electrical Installation	3246126 thru 3246181	
			3257076 thru 3257198	
	104408 (Z)	DRAWING - Electrical Installation	3246182 and up	
			3257199 and up	
	87487 (N)	DRAWING - Recognition Light Installation		
	87348 (H)	DRAWING - Courtesy Light Installation		
	87505 (A)	DRAWING - Switch Installation		
	39870 (U)	DRAWING - Radio Master Switch Installation		
	38040 (DA)	DRAWING - Nose Gear Installation		
	100897 (NEW)	DRAWING - OAT Probe Installation	3246088 and up	
			3257001 and up	
1	68804-004	CONTROL ASSY - Voltage	3246001 thru 3246017	1
1	68804-007	CONTROL ASSY - Voltage	3246018 and up	1
		(Refer to Piper Service Letter #1049 - latest revision)	3257001 and up	
-1A	557-337	. CONTROL - Alternator (B-0371-1)(Used on 68804-004)	3246001 thru 3246017	1
-1A	694-020	. CONTROL - Alternator (VR320)(Used on 68804-007)	3246018 and up	1
			3257001 and up	
-1B	400-437	BOLT - (AN3-3A)		2
-1C	690-612	WASHER - (NAS1149F0363P)		2
2	487-169	SOLENOID - Starter	3246001 thru 3246017	1
2	487-152	SOLENOID - Starter	3246018 and up	1
			3257001 and up	
-2A	401-307	BOLT - (AN4-4A)		4
-2B	690-611	WASHER - (NAS1149F0463P)	3246001 thru 3246017	2
-2C	407-801	WASHER - (AN970-4)		2
-2D	404-526	NUT - (MS21042-3)		1
-2E	407-137	WASHER - Tooth lock (AN936-A516)		1
3	484-373	CONTACTOR - Landing gear power	3246001 thru 3246017	2
3	487-167	CONTACTOR - Landing gear power (26898-005)	3246018 and up	2
			3257001 and up	
-3A	401-307	BOLT - (AN4-4A)	3246001 thru 3246017	4
-3B	690-611	WASHER - (NAS1149F0463P)	3246001 thru 3246017	4
4	453-742	BULB - Oil temperature (MS28034-1)		1
5	462-012	GASKET - Engine unit		1
6	476-673	NIPPLE - Sending unit and solenoids (MS25171-1S)		8
7	476-675	NIPPLE - Alternator and relays (MS25171-2S)		4
8	476-683	NIPPLE - Solenoid (23969-005)		2
9	488-545	BOARD ASSY - Terminal (MS27212-1-12)		1
10	69874-003	BRACKET ASSY - Mounting		1
-10A	85456-002	CURRENT SENSOR	3246018 and up	2
			3257001 and up	
11	87499-002	LIGHT ASSY - Forward baggage compartment	3246001 thru 3246017	1
11	87499-007	LIGHT ASSY - Forward baggage compartment	3246018 and up	1
			3257001 and up	
-11A	472-034	. LAMP	3246001 thru 3246017	1
-11A	472-027	. LAMP	3246018 and up	1
			3257001 and up	

-Item not illustrated

When ordering, always specify Part Number, Description, and Serial Number of Aircraft

FIGURE ITEM	PART NUMBER	NOMENCLATURE	EFFECT FROM TO	UNITS PER ASSY
69-				
12	36742-020	SWITCH ASSY - Nose gear light	3246001 thru 3246087	1
12	36742-021	SWITCH ASSY - Nose gear light	3246088 thru 3246181 3257001 thru 3257198	1
12	36742-022	SWITCH ASSY - Nose gear light	3246182 and up 3257199 and up	1
-12A	415-514	SCREW - (MS35206-234)(Attach switch to bracket)		2
-12B	690-640	WASHER - (NAS1149FN632P)		6
-12C	404-528	NUT - (MS21042-06)		2
-12D	85364-002	BRACKET ASSY - Landing light switch	3246001 thru 3246181 257001 thru 3257198	3
-12E	401-269	BOLT - (AN3-10A)(Attaches bracket)	3246001 thru 3246181 3257001 thru 3257198	2
-12F	690-612	WASHER - (NAS1149F0363P)	3246001 thru 3246181 3257001 thru 3257198	4
-12G	404-526	NUT - (MS21042-3)	3246001 thru 3246181 3257001 thru 3257198	2
13	85296-002	BOX ASSY - Annunciator panel dimming (See Item 69 for attaching hardware)	3246001 thru 3246017	1
13	83358-003	BOX ASSY - Annunciator panel dimming	3246018 thru 3246087	1
13	83358-005	BOX ASSY - Annunciator panel dimming	3246088 thru 3246181 3257001 thru 3257198	1
13	104445-002	BOX ASSY - Annunciator panel dimming	3246182 and up 3257199 and up	1
-13A	686-815	. RELAY - (KHS-17D31-12)	3246001 thru 3246017	4
-13B	686-816	. RELAY	3246001 thru 3246017	1
-13C	686-813	. RELAY - (Y-J2N)	3246018 and up 3257001 and up	AR
-13D	686-814	. RELAY	3246018 and up 3257001 and up	AR
-13E	456-758	. DIODE - (1N4005)	3246001 thru 3246017	5
-13E	456-703	. DIODE - (1N2071A)	3246018 and up 3257001 and up	AR
-13F	484-494	. RESISTOR - 50 Ohm, 6.5 watt (VC5E)	3246001 thru 3246017	1
-13G	694-002	. RESISTOR - 75 Ohm, 3.25 watt (VC3D-75)	3246001 thru 3246017	12
-13H	599-179	. RESISTOR - 560 Ohm, 6.5 watt (25J560)	3246018 and up 3257001 and up	AR
-13J	584-195	. RESISTOR - 47k Ohm, 0.5 watt (RC20GF473J)	3246182 and up 3257199 and up	1
-13K	694-004	. RESISTOR - 1k Ohm, 0.25 watt (0D102J)	3246182 and up 3257199 and up	1
-13L	694-006	. RESISTOR - 450 Ohm, 5 watt (25J450)	3246182 and up 3257199 and up	3
-13M	85297-007	. COVER - Annunciator panel dimming	3246001 thru 3246017	1
-13M	83357-006	. COVER - Annunciator panel dimming	3246018 and up 3257001 and up	1
-13N	415-518	. SCREW - (MS35206-228)(Attach cover)	3246001 thru 3246017	10
-13N	520-043	. SCREW - (MS51861-24)(Attach cover)	3246018 and up 3257001 and up	6
-13P	690-639	. WASHER - (NAS1149FN616P)		6
14	85347-002	LIGHT ASSY - Landing	3246001 thru 3246017	1
14	85347-003	LIGHT ASSY - Landing	3246018 and up 3257001 and up	1

-Item not illustrated

When ordering, always specify Part Number, Description, and Serial Number of Aircraft

FIGURE ITEM	PART NUMBER	NOMENCLATURE	EFFECT FROM TO	UNITS PER ASSY
69-				
-14A	472-661	. LAMP - Landing light	3246001 thru 3246017	1
-14A	472-071	. LAMP - Landing light	3246018 and up 3257001 and up	1
15	85363-003	BRACKET - Landing light		1
16	35777-008	SUPPORT - Landing light		1
17	35777-007	BEZEL - Landing light		1
-17A	63186-009	SEAL - Landing light		1
18	69050-004	WIRE ASSY - Ground plate	3246001 thru 3246017	1
18	79653-216	WIRE ASSY - Ground plate	3246018 and up	1
19	548-262	DETECTOR - Lift (148-7)	3246001 thru 3246087	2
19	89482-002	DETECTOR - Lift (Alternate for 548-262)	3246001 thru 3246087	2
-19A	415-518	SCREW - (MS35206-228)		4
-19B	690-640	WASHER - (NAS1149FN632P)		4
20	406-393	NUT - Special light attachment		2
21	69325-123	WIRE ASSY - Battery to starter solenoid (P1B4)	3246001 thru 3246087	1
21	79653-242	WIRE ASSY - Battery to starter solenoid (P1B4)	3246088 and up 3257001 and up	1
22	581-587	PLATE - Grommet, firewall seal (66789-000)		2
-22A	415-535	SCREW - (MS35206-245)		2
-22B	404-529	NUT - (MS21042-08)		2
23	463-406	GROMMET - Firewall (68770-004)		2
24	68771-004	GASKET - Firewall (FWD side of firewall)		1
25	69325-124	WIRE ASSY - Starter solenoid to starter (K2A)	3246001 thru 3246087	1
25	79653-249	WIRE ASSY - Starter solenoid to starter (K2A4)	3246088 and up 3257001 and up	1
26	38252-002	BRACKET - Nose landing switch shield		1
27	37939-002	COVER AND SWITCH ASSY - Baggage light		1
28	37873-003	. SWITCH - Baggage light, magnetic		1
29	37871-009	LIGHT ASSY - Courtesy, forward		1
-29A	419-623	SCREW		2
30	484-209	RELAY - Landing light	3246001 thru 3246017	1
30	686-820	RELAY - Landing light	3246018 and up 3257001 and up	1
-30A	415-308	SCREW - (MS27039-0808)		2
-30B	690-616	WASHER - (NAS1149FN832P)		2
-30C	407-042	WASHER - Lock (MS35338-42)		2
31	67404-002	COVER - Terminal strip, bottom		1
32	67404-003	COVER - Terminal strip, top		1
33	36742-014	SWITCH ASSY - Down limit, main gear, left and right		1
34	36742-013	SWITCH ASSY - Squat, main gear, left		1
35	36742-015	SWITCH ASSY - Up limit, main gear, left and right		2
36	36742-016	SWITCH ASSY - Down limit, nose gear		1
-36A	36773-003	SHIM - (Add as required to align switch tubing over LH wing harness)		AR
-36B	415-525	SCREW - (MS35206-235)	3246001 thru 3246017	2
-36B	415-514	SCREW - (MS35206-234)	3246018 and up 3257001 and up	2
-36C	690-640	WASHER - (NAS1149FN632P)(Under screw head)		2
-36D	690-660	WASHER - (MS35335-30)(Under nut)	3246001 thru 3246181 3257001 thru 3257198	2
-36D	408-042	WASHER - (MS35333-37)(Under nut)	3246182 and up 3257199 and up	2
-36E	404-528	NUT - (MS21042-06)		2
37	36742-017	SWITCH ASSY - Up limit, nose gear		1

-Item not illustrated

When ordering, always specify Part Number, Description, and Serial Number of Aircraft

FIGURE ITEM	PART NUMBER	NOMENCLATURE	EFFECT FROM TO	UNITS PER ASSY
69-				
-37A	415-514	SCREW - (MS35206-234)		2
-37B	690-640	WASHER - (NAS1149FN632P)(Under screw head)		2
-37C	690-660	WASHER - (MS35335-30)(Under nut)	3246001 thru 3246181 3257001 thru 3257198	2
-37C	408-042	WASHER - (MS35333-37)(Under nut)	3246182 and up 3257199 and up	2
-37D	404-528	NUT - (MS21042-06)		2
38	36773-002	BRACKET - Limit switch, down		1
-38A	415-533	SCREW - (MS35206-243)		2
-38B	408-042	WASHER - (MS35333-37)(Lower screw only)	3246001 thru 3246087	1
-38B	690-673	WASHER - (MS35335-87)(Lower screw only)	3246088 thru 3246125 3257001 thru 3257075	1
-38B	408-043	WASHER - (MS35333-38)(Lower screw only)	3246126 and up 3257076 and up	1
-38C	690-616	WASHER - (NAS1149FN832P)(Upper screw only)	3246088 and up 3257001 and up	1
-38D	404-529	NUT - (MS21042-08)	3246088 thru 3246125 3257001 thru 3257075	2
39	36772-003	BRACKET - Limit switch, up	3246001 thru 3246017	1
39	36772-002	BRACKET - Limit switch, up	3246018 and up 3257001 and up	1
-39A	415-533	SCREW - (MS35206-243)		2
-39B	408-042	WASHER - (MS35333-37)(Lower screw only)		1
-39C	408-043	WASHER - (MS35333-38)(Upper screw only)	3246088 thru 3246125 3257001 thru 3257076	1
40	35214-000	HORN - Stall warning	3246001 thru 3246017	1
40	35214-002	HORN - Stall warning	3246018 and up 3257001 and up	1
-40A	415-531	SCREW - (MS35206-241)		1
-40B	408-043	WASHER - (MS35333-38)		1
41	02054-003	HORN - Gear warning	3246001 thru 3246017	1
41	565-323	HORN - Gear warning	3246018 and up 3257001 and up	1
-41A	404-593	NUT - (AN340-B6)		2
-41B	408-042	WASHER - (MS35333-37)		2
42	38149-004	FLASHER ASSY - Gear warning	3246001 thru 3246017	1
42	38149-010	FLASHER ASSY - Gear warning	3246018 and up 3257001 and up	1
43	18321-000	PLATE - Firewall seal		2
-43A	415-574	SCREW - (AN515-8R8)		2
-43B	690-616	WASHER - (NAS1149FN832P)		2
-43C	404-529	NUT - (MS21042-08)		2
-43D	189-625	GROMMET		AR
44	189-625	GROMMET - Firewall seal		AR
45	79595-020	FUSE ASSY	3246001 thru 3246087	1
-45A	461-629	. FUSE - 5 Ampere (311005)	3246001 thru 3246087	1
-45B	465-258	. HOLDER - Fuse (155020)	3246001 thru 3246087	
46	489-463	PROBE - Cylinder head temperature		1
47	36748-002	BRACKET - Main gear down limit switch, left		1
-47A	36748-003	BRACKET - Main gear down limit switch, right		1
48	67487-003	DIODE ASSY		2
-48A	401-307	BOLT - (AN4-4A)		4
49	456-703	. DIODE - (1N2071A)		1
50	487-922	SWITCH - Baggage door annunciator light (1SE1)		1

-Item not illustrated

When ordering, always specify Part Number, Description, and Serial Number of Aircraft

FIGURE ITEM	PART NUMBER	NOMENCLATURE	EFFECT FROM TO	UNITS PER ASSY
69-				
51	--- ---	ACTUATOR - Baggage door annunciator light (JE-73)		1
-51A	486-195	SCREW		2
-51B	690-638	WASHER - (NAS1149FN332P) (Between screw head and plate)		2
-51C	477-710	NUT - (67212)		2
52	87503-002	PLATE - Switch mounting		1
53	87373-007	WIRE ASSY - Alternator to ammeter		1
54	487-925	SWITCH - Stall warning horn (V3-1)(See Figure 56)		RF
-54A	451-841	ACTUATOR - Stall warning switch (JV-5)(See Figure 56)		RF
55	487-925	SWITCH - Gear warning horn (V3-1)(See Figure 56)		RF
-55A	451-841	ACTUATOR - Gear warning switch (JV-5)(See Figure 56)		RF
56	486-684	SHUNT - (MS91586-6)	3246001 and up 3257001 and up	1
-56A	101166-010	FUSE HOLDER ASSY (Refer to Piper Service Bulletin #1015 - latest revision)	3246001 thru 3246087	1
-56B	101166-011	FUSE HOLDER ASSY (Refer to Piper Service Bulletin #1015 - latest revision)	3246001 thru 3246087	1
-56C	104371-002	COVER	3246154 and up 3257124 and up	1
57	87742-002	LIGHT ASSY - Recognition/Taxi (14 VDC)	3246001 thru 3246017	2
57	85402-017	LIGHT ASSY - Recognition/Taxi, left wing (28 VDC)	3246018 and up 3257001 and up	1
-57A	85402-011	LIGHT ASSY - Recognition/Taxi, right wing (28 VDC)	3246018 and up 3257001 and up	1
-58	761-279	. LAMP - Recognition light	3246001 thru 3246017	1
-58	472-071	. LAMP - Recognition/Taxi light	3246018 and up 3257001 and up	1
-58A	85402-016	. BACKPLATE - Left	3246018 and up 3257001 and up	1
-58B	85402-010	. BACKPLATE - Right	3246018 and up 3257001 and up	1
-58C	63186-039	. SEAL - Backplate	3246018 and up 3257001 and up	1
-58D	85402-008	. RETAINER RING	3246018 and up 3257001 and up	1
-58E	63186-038	. SEAL - Retainer ring	3246018 and up 3257001 and up	1
-58F	415-514	. SCREW - (MS35206-234)	3246018 and up 3257001 and up	3
-58G	85402-009	. BUSHING	3246018 and up 3257001 and up	3
59	85324-002	PLATE ASSY - Relay mounting	3246001 thru 3246125 3257001 thru 3257075	3
59	85324-004	PLATE ASSY - Relay mounting	3246126 thru 3246181 3257076 thru 3257198	1
60	85299-002	CONTROL ASSY - Ammeter, dimmer	3246001 thru 3246017	1
60	85299-003	CONTROL ASSY - Ammeter, dimmer, low voltage monitor (Optional - replaces 85299-002)	3246001 thru 3246017	1
60	85299-005	CONTROL ASSY - Ammeter, dimmer	3246018 thru 3246087	1
-60A	686-816	. RELAY	3246001 thru 3246017	1
-60A	686-814	. RELAY	3246018 thru 3246087	1
-60B	596-778	. MONITOR - Low voltage	3246001 thru 3246017	1
-60B	475-272	. MONITOR - Low voltage (B-00375-2)	3246018 thru 3246087	1

-Item not illustrated

When ordering, always specify Part Number, Description, and Serial Number of Aircraft

FIGURE ITEM	PART NUMBER	NOMENCLATURE	EFFECT FROM TO	UNITS PER ASSY
69-				
-60B	89840-005	MONITOR - Low voltage	3246088 and up 3257001 and up	
-60C	415-535	SCREW - (MS35206-245)		4
-60D	690-616	WASHER - (NAS1149FN832P)		4
61	584-291	RELAY - Ground clearance (20607-081)	3246001 thru 3246017	1
61	584-315	RELAY - Ground clearance (187-32C200)	3246018 and up 3257001 and up	1
62	556-753	COUPLER - Antenna		1
63	584-279	RELAY - Radio master (6041H298)	3246001 thru 3246017	1
63	584-278	RELAY - Radio master (6041H298)	3246018 and up 3257001 and up	1
64	84522-003	TRANSDUCER - Fuel flow	3246088 and up 3257001 and up	RF
65	686-086	SENSOR - OAT probe	3246088 and up 3257001 and up	1
-66	548-853	LEAD ASSY - EGT	3246001 thru 3246087	1
-67	481-388	PROBE - EGT	3246088 and up	1
-68	557-111	GROUND BLOCK - (Mounted above low voltage monitor on relay mounting plate)(GB1 and GB2)	3246088 thru 3246181 3257001 thru 3257198	2
-68	557-111	GROUND BLOCK - (Mounted above low voltage monitor on relay mounting plate)(GB1, GB2, GB3 and GB4)	3246182 and up 3257199 and up	4
-68A	415-535	SCREW - (MS35206-245)(Attach Ground Blocks)	3246088 and up 3257001 and up	AR
-69	603-401	HORN - Exceedance	3246088 and up 3257001 and up	1
-69A	35672-002	BRACKET	3246088 and up 3257001 and up	1
-69B	415-518	SCREW - (MS35206-228)	3246088 and up 3257001 and up	2
-69C	690-639	WASHER - (NAS1149FN616P)	3246088 and up 3257001 and up	2
-69D	404-225	NUT - (AN315-4R)	3246088 and up 3257001 and up	2

-Item not illustrated

When ordering, always specify Part Number, Description, and Serial Number of Aircraft

THIS PAGE INTENTIONALLY LEFT BLANK

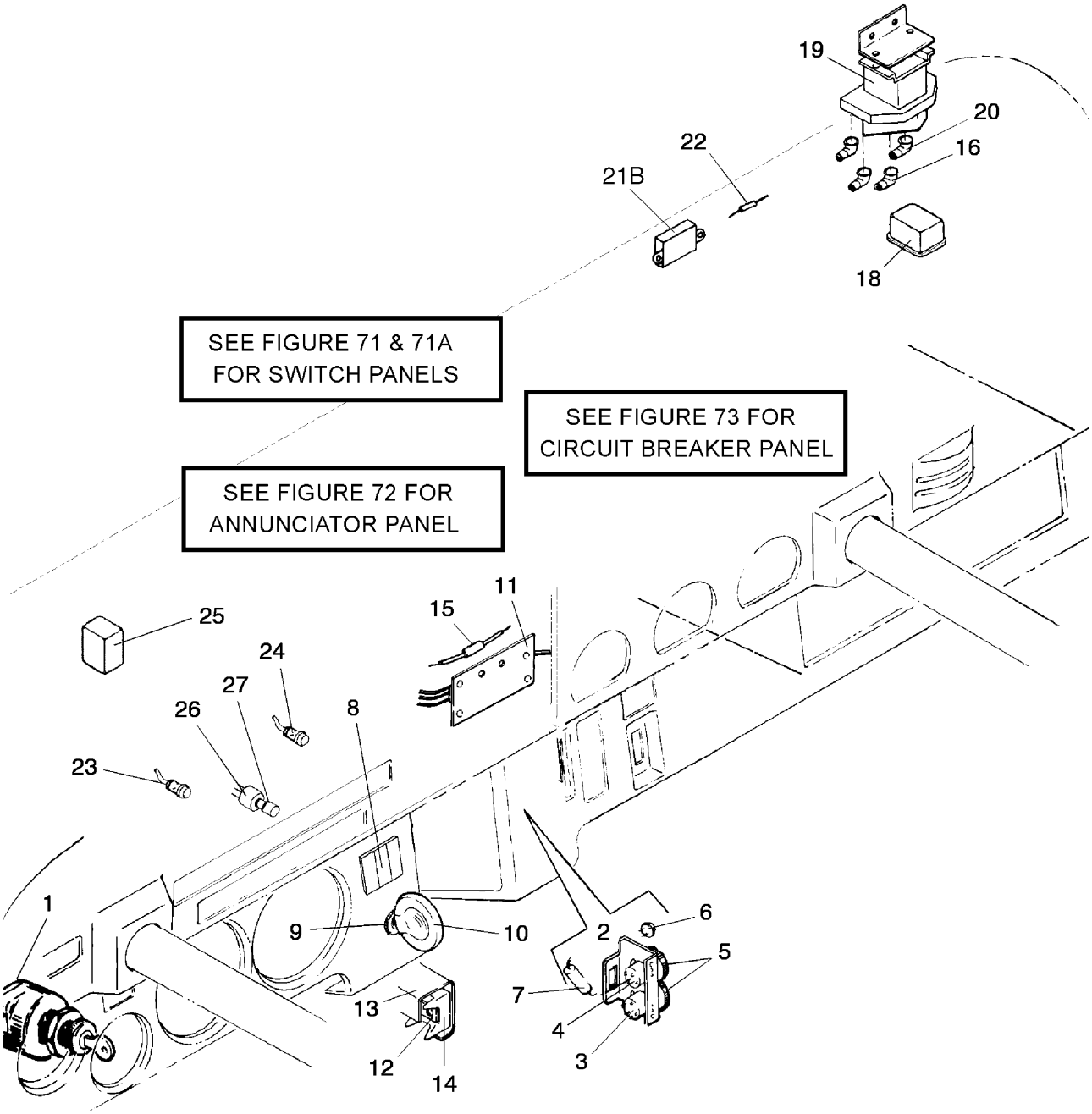

Figure 70. Instrument Panel Electrical Installation

FIGURE ITEM	PART NUMBER	NOMENCLATURE	EFFECT FROM TO	UNITS PER ASSY
70	85295 (F)	DRAWING - Electrical Installation	3246001 thru 3246017	
		(See Figure 71 for main switch panel assy)		
		(See Figure 72 for annunciator panel assy)		
		(See Figure 73 for circuit breaker panel assy)		
	85455 (G)	DRAWING - Electrical Installation	3246018 and up	
		(See Figure 71 for main switch panel assy)		
		(See Figure 72 for annunciator panel assy)		
		(See Figure 73 for circuit breaker panel assy)		
	39870 (U)	DRAWING - Radio Master Switch Installation		
	87458 (J)	DRAWING - Ground Clearance Switch Installation		
	100838 (W)	DRAWING - Electrical Installation	3246088 thru 3246125	
	101300 (M)	DRAWING - Electrical Installation	3246126 thru 3246181 3257076 thru 3257198	
	104408 (V)	DRAWING - Electrical Installation	3246182 and up 3257199 and up	
1	688-178	SWITCH - Ignition	3246001 thru 3246017	1
		(If matching ignition switch and door locks are desired, order kit 87329-04)		
2	39576-002	CONTROL ASSY - Dimmer	3246001 thru 3246017	1
3	67436-004	. SWITCH - Potentiometer		1
4	67436-006	. SWITCH - Potentiometer		1
5	571-162	KNOB - Potentiometer	3246001 thru 3246017	2
6	489-400	. TRANSISTOR		2
7	584-149	. RESISTOR		2
8	85315-002	LIGHT ASSY - Landing gear, 14 volt	3246001 thru 3246017	1
8	85315-003	LIGHT ASSY - Landing gear, 28 volt	3246018 and up 3257001 and up	1
-8A	456-703	. DIODE		6
-8B	472-054	. LAMP	3246001 thru 3246017	6
-8B	472-028	. LAMP	3246018 and up	6
9	487-936	SWITCH - Landing gear		1
10	67439-002	KNOB - Landing gear switch		1
11	38255-002	BLOCK ASSY		1
-11A	415-536	. SCREW - (MS35206-246)		AR
-11B	690-616	. WASHER - (NAS1149FN832P)		4
-11C	405-457	. NUT - (MS35649-282)		2
12	35207-000	BAR - Bus, terminal strip		3
13	79205-000	COVER - Terminal strip		1
-13A	415-505	SCREW - (MS35206-215)		2
-13B	407-040	WASHER - Lock (MS35338-40)		2
-13C	404-596	NUT - (MS20341-4S)		2
14	588-464	STRIP - Terminal (MS27212-1-4)		2
-14A	588-362	STRIP - Terminal (MS27212-1-6)	3246088 and up 3257001 and up	1
15	67487-002	WIRE ASSY - Diode		1
-15A	456-714	. DIODE		1
16	23969-003	NIPPLE - Electrical		2
-17	39870-007	SWITCH - Radio master installation	3246001 thru 3246017	2
-17	39870-010	SWITCH - Radio master installation	3246018 and up 3257001 and up	1

-Item not illustrated

When ordering, always specify Part Number, Description, and Serial Number of Aircraft

FIGURE ITEM	PART NUMBER	NOMENCLATURE	EFFECT FROM TO	UNITS PER ASSY
70				
18	584-278	. RELAY	3246018 and up 3257001 and up	1
19	584-279	. RELAY	3246001 thru 6246017	1
-19A	688-296	. SWITCH - Rocker (8941K699)		1
-19B	84622-017	. CAP - Rocker	3246001 thru 3246017	1
-19C	89848-013	. CAP - Switch	3246018 and up 3257001 and up	1
-19D	561-027	. FILTER	3246001 thru 3246017	2
20	23969-002	NIPPLE - Electrical		2
-21	87458-003	SWITCH - Ground clearance installation	3246001 thru 6246017	1
-21	87458-004	SWITCH - Ground clearance installation	3246018 thru 3246087	1
-21	87458-005	SWITCH - Ground clearance installation	3246088 thru 3246125 3257001 thru 3257075	1
-21	87458-006	SWITCH - Ground clearance installation	3246126 and up 3257076 and up	1
-21A	87456-004	. HARNESS ASSY	3246001 thru 3246017	1
-21A	87456-005	. HARNESS ASSY	3246018 thru 3246087	1
-21A	100912-002	. HARNESS ASSY	3246088 thru 3246125 3257001 thru 3257075	1
-21A	100912-003	. HARNESS ASSY	3246126 and up 3257076 and up	1
21B	584-291	. . RELAY - Ground clearance switch (20607-81)	3246001 thru 3246017	1
21B	584-315	. . RELAY - Ground clearance switch (187-32C200)	3246018 and up	1
22	456-703	. . DIODE - Ground clearance switch		1
23	75619-005	POST LIGHT	3246001 thru 3246017	3
-23A	75619-005	POST LIGHT	3246018 thru 3246087 3257001 and up	7
24	572-636	POST LIGHT	3246001 thru 3246017	19
-24A	75619-006	POST LIGHT	3246018 thru 3246087 3257001 and up	16
25	557-122	CONTROL MODULE - Dimmer	3246018 thru 3246087 3257001 and up	3
26	481-374	. POTENTIOMETER - Dimmer (RV6NAYSA502A)	3246088 and up 3257001 and up	3
27	571-192	KNOB - Dimmer	3246018 thru 3246087	3
-28	548-885	AMMETER		1
-29	85305-002	SUPPORT - Connector		1
-30	85534-002	PLATE ASSY	3246018 and up 3257001 and up	1
-31	85534-003	PLATE ASSY	3246018 and up 3257001 and up	1
-32	85522-002	PLATE ASSY	3246018 and up 3257001 and up	1

-Item not illustrated

When ordering, always specify Part Number, Description, and Serial Number of Aircraft

THIS PAGE INTENTIONALLY LEFT BLANK

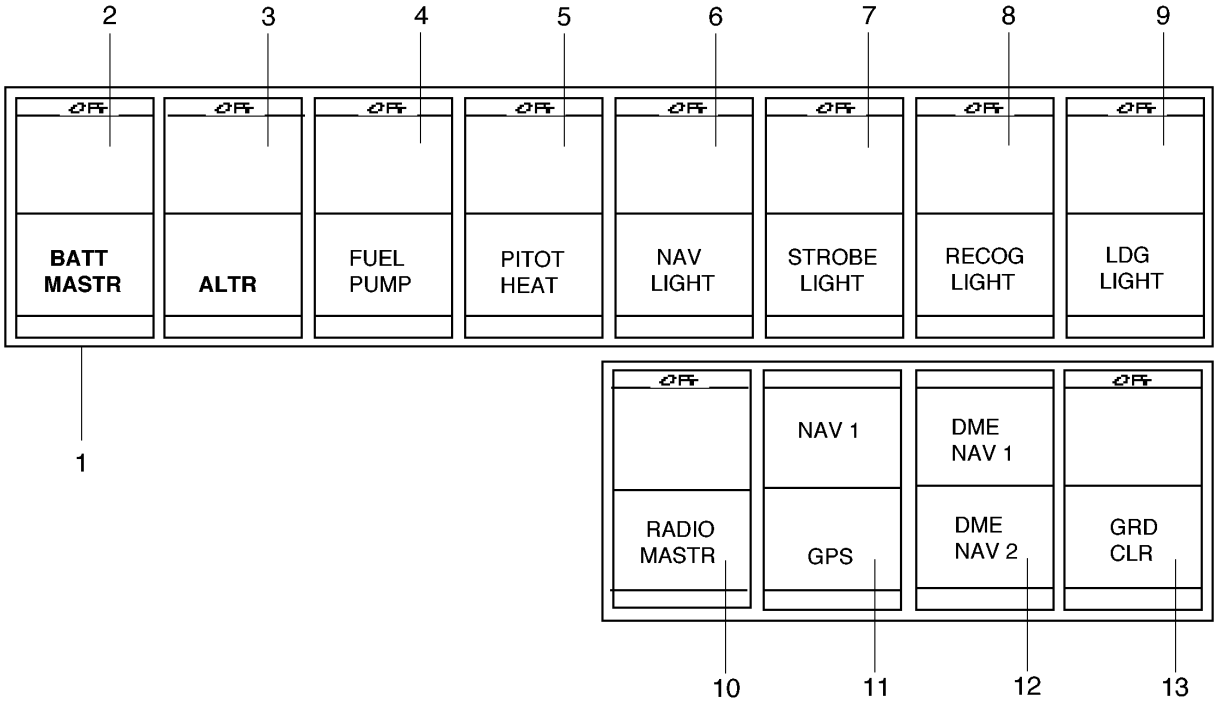

Figure 71. Switch Panels (Serial numbers 3246001 thru 3246017)

FIGURE ITEM	PART NUMBER	NOMENCLATURE	EFFECT FROM TO	UNITS PER ASSY
71	85295 (F)	DRAWING - Electrical Installation	3246001 thru 3246017	
1	688-296	SWITCH		8
-1A	472-151	LAMP		16
-1B	561-027	FILTER		16
2	84622-084	CAP - Batt mastr		1
3	84622-085	CAP - Altr		1
4	84622-068	CAP - Fuel pump		1
5	84622-025	CAP - Pitot heat		1
6	84622-013	CAP - Nav light		1
7	84622-012	CAP - Strobe light		1
8	84622-052	CAP - Recog light		1
9	84622-010	CAP - Ldg light		1
10	84622-017	CAP - Radio Mastr		1
11	84622-083	CAP - NAV 1/GPS		1
12	84622-039	CAP - DME NAV 1/DME NAV 2		1
13	84622-020	CAP -GRD CLR		1

-Item not illustrated

When ordering, always specify Part Number, Description, and Serial Number of Aircraft

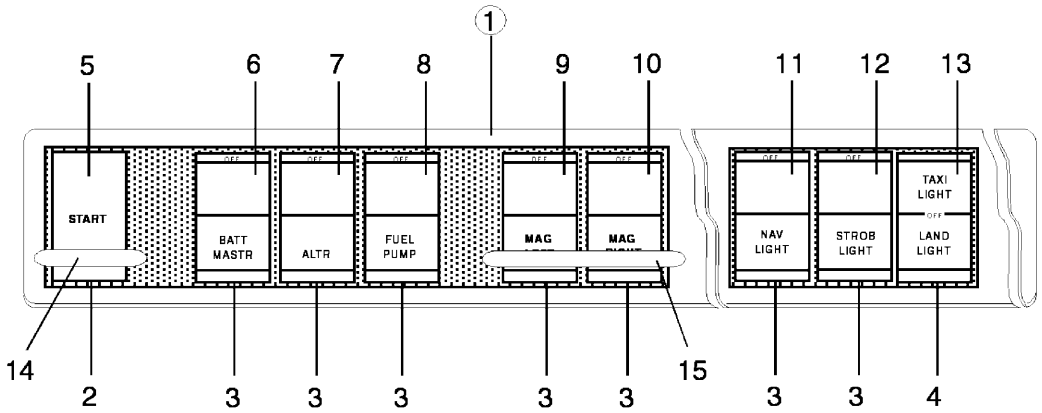

OVERHEAD SWITCH PANEL (3246018 thru 3246087)

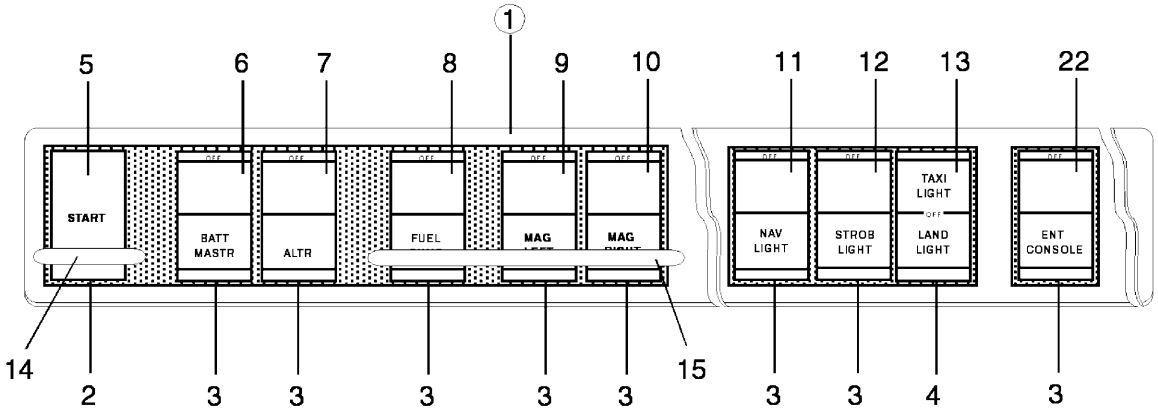

OVERHEAD SWITCH PANEL (3246088-up; 3257001-up)

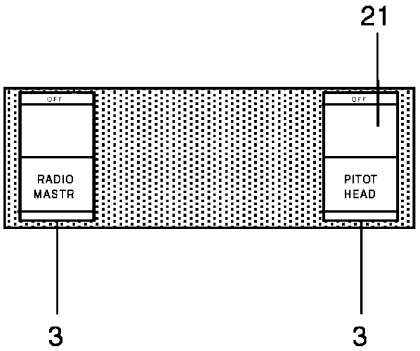

AVIONICS SWITCH PANEL

Figure 71A. Switch Panels (Serial numbers 3246018 and up; 3257001 and up)

FIGURE ITEM	PART NUMBER	NOMENCLATURE	EFFECT FROM TO	UNITS PER ASSY
71A	85455 (F)	DRAWING - Electrical Installation	3246018 thru 3246087	
	100838 (P)	DRAWING - Electrical Installation	3246088 thru 3246125 3257001 thru 3257075	
	101300 (M)	DRAWING - Electrical Installation	3246126 thru 3246181 3257076 thru 3257198	
	104408 (P)	DRAWING - Electrical Installation	3246182 and up 3257199 and up	
1	85507-002	PANEL ASSY - Overhead switch	3246018 thru 3246087	1
1	85507-003	PANEL ASSY - Overhead switch	3246088 thru 3246125	1
1	85507-004	PANEL ASSY - Overhead switch	3257001 thru 3257075	1
1	101257-002	PANEL ASSY - Overhead switch	3246126 thru 3246153 3257076 thru 3257123	1
1	101257-003	PANEL ASSY - Overhead switch	3246126 thru 3246153 3257076 thru 3257123	1
1	101257-006	PANEL ASSY - Overhead switch	3246154 and up 3257124 and up	1
1	101257-007	PANEL ASSY - Overhead switch	3246154 and up 3257124 and up	1
2	688-297	. SWITCH		1
3	688-296	. SWITCH		AR
4	688-298	. SWITCH	3246018 thru 3246153 3257001 thru 3257123	1
4	688-298	SWITCH	3246154 thru 3246181 3257124 thru 3257198	2
5	89848-038	. CAP - Start (654-511)		1
6	89848-014	. CAP - Batt Mastr (654-456)		1
7	89848-059	. CAP - Altr (654-536)		1
8	89848-036	. CAP - Fuel pump (654-479)		1
9	89848-010	. CAP - Mag left (654-452)		1
10	89848-011	. CAP - Mag right (654-453)		1
11	89848-004	. CAP - Nav light (654-446)		1
12	654-447	. CAP - Strobe light		1
13	89848-005	. CAP - Taxi light/land light (654-535)	3246018 thru 3246125 3257001 thru 3257075	1
14	53916-002	. GUARD - Switch		1
15	53916-000	. GUARD - Switch	3246018 thru 3246087	1
15	53916-003	. GUARD - Switch	3246088 and up 3257001and up	1
21	89848-007	. CAP - Pitot heat (654-449)	3246182 and up 3257199 and up	1
22	89848-062	. CAP - Ent console (654-540)	3246088 thru 3246153 3257124 and up	1
-23	89848-002	. CAP - Taxi light (654-444)	3246126 and up 3257076 and up	1
-24	89848-069	. CAP - Strobe light/fin strobe (688-480)	3246154 and up 3257124 and up	1
-25	89848-070	. CAP - Landing light/pulse (688-483)	3246126 thru 3246153 3257076 thru 3257123	1
-26	456-758	. DIODE - (1N4005)	3246126 and up 3257076 and up	1
-27	100512-002	. PLATE - Overhead switch panel	3246018 thru 3246087	1

-Item not illustrated

When ordering, always specify Part Number, Description, and Serial Number of Aircraft

FIGURE ITEM	PART NUMBER	NOMENCLATURE	EFFECT FROM TO	UNITS PER ASSY
71A-				
-27A	100512-014	. PLATE - Overhead switch panel	3246088 thru 3246125 3257001 thru 3257075	1
-27B	100512-015	. PLATE - Overhead switch panel	3246088 thru 3246125 3257001 thru 3257075	1
-27C	100512-019	. PLATE - Overhead switch panel	3246126 thru 3246181 3257076 thru 3257198	1
-27D	100512-018	. PLATE - Overhead switch panel	3246126 and up 3257076 and up	1
-28	515-712	SCREW	3246018 and up 3257001 and up	8

-Item not illustrated

When ordering, always specify Part Number, Description, and Serial Number of Aircraft

THIS PAGE INTENTIONALLY LEFT BLANK

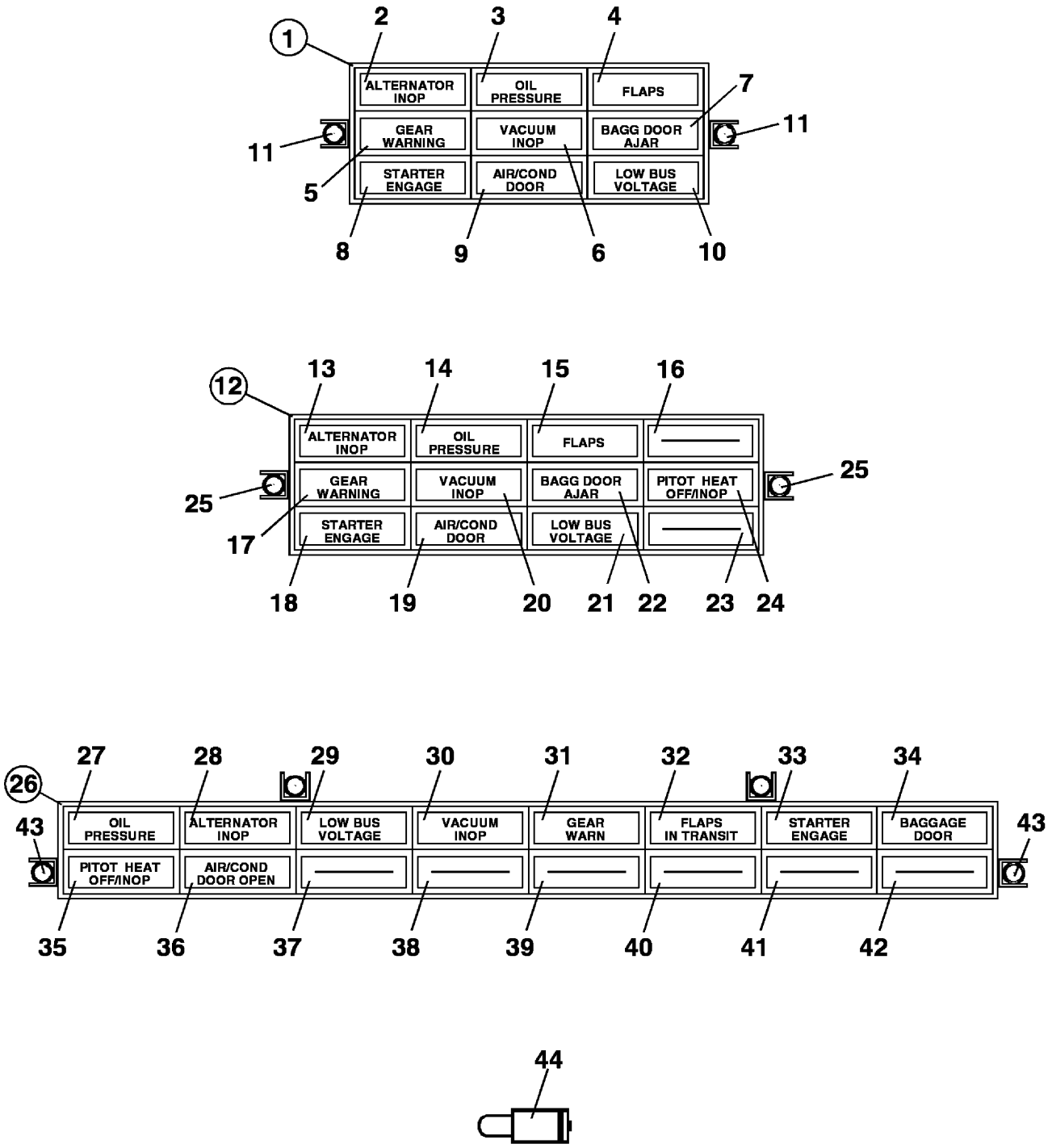

Figure 72. Annunciator Panel Assemblies

FIGURE ITEM	PART NUMBER	NOMENCLATURE	EFFECT FROM TO	UNITS PER ASSY
72	85316 (J)	DRAWING - Annunciator Panel Assy - Complete		
1	85316-002	ANNUNCIATOR PANEL ASSY - Complete	3246001 thru 3246017	1
-1A	683-501	. LIGHT ASSY - Indicator (85288-02)		1
2	766-512	. . CAP - Alternator inop, red (85288-15)		1
3	766-522	. . CAP - Oil pressure, amber (85288-13)		1
4	766-521	. . CAP - Flaps, amber (85288-12)		1
5	766-520	. . CAP - Gear warning, red (85288-11)		1
6	766-523	. . CAP - Vacuum inop, amber (85288-14)		1
7	766-524	. . CAP - Bagg door ajar, amber (85288-16)		1
8	766-513	. . CAP - Blank , green (85288-20)		1
-8A	654-491	. . CAP - Starter engage, red (optional)(85288-18)		1
9	766-513	. . CAP - Blank, green (85288-20)		1
-9A	654-493	. . CAP - Air cond door, amber (optional)(85288-17)		1
10	766-513	. . CAP - Blank, green (85288-20)		1
-10A	654-492	. . CAP - Low bus voltage, red (optional)(85288-19)		1
11	520-046	. SCREW - (MS24693C6B)		2
12	85316-003	ANNUNCIATOR PANEL ASSY - Complete	3246018 thru 3246087	1
-12A	683-503	. LIGHT ASSY - Indicator (85288-03)		1
13	766-528	. . CAP - Alternator inop, red (85288-25)		1
14	766-508	. . CAP - Oil pressure, amber (85288-23)		1
15	766-529	. . CAP - Flaps, amber (85288-22)		1
16	766-530	. . CAP - Blank, green (85288-30)		1
17	766-519	. . CAP - Gear warning, red (85288-21)		1
18	654-508	. . CAP - Starter engage, red (85288-28)		1
19	766-530	. . CAP - Blank, green (85288-30)		1
-19A	654-512	. . CAP - Air cond door, amber (optional)(85288-27)		1
20	766-525	. . CAP - Vacuum inop, amber (85288-24)		1
21	653-631	. . CAP - Low bus voltage, red (85288-29)		1
22	766-531	. . CAP - Bagg door ajar, amber (85288-26)		1
23	766-530	. . CAP - Blank, green (85288-30)		1
24	654-506	. . CAP - Pitot heat off/inop, amber (85288-31)		1
25	520-046	. SCREW - (MS24693C6B)		2
26	85316-004	ANNUNCIATOR PANEL ASSY - Complete	3246088 and up 3257001 and up	1
-26A	599-599	. LIGHT ASSY - Indicator (89452-07)		1
27	766-508	. . CAP - Oil pressure, amber (89452-21)		1
28	766-528	. . CAP - Alternator inop, red (89452-33)		1
29	653-631	. . CAP - Low bus voltage, red (89452-18)		1
30	766-525	. . CAP - Vacuum inop (amber)(89452-32)		1
31	766-519	. . CAP - Gear warn, red (89452-12)		1
32	766-536	. . CAP - Flaps in transit, amber (89452-45)		1
33	654-508	. . CAP - Starter engage, red (89452-35)		1
34	766-537	. . CAP - Baggage door, amber (89542-23)		1
35	654-506	. . CAP - Pitot heat off/inop, amber (89452-34)		1
36	766-530	. . CAP - Blank, green (89452-26)		1
-36A	653-633	. . CAP - Air/cond door open, amber (optional)(89452-25)		1
37	766-530	. . CAP - Blank, green (89452-26)		1
38	766-530	. . CAP - Blank, green (89452-26)		1
39	766-530	. . CAP - Blank, green (89452-26)		1
40	766-530	. . CAP - Blank, green (89452-26)		1
41	766-530	. . CAP - Blank, green (89452-26)		1
42	766-530	. . CAP - Blank, green (89452-26)		1
43	520-046	. SCREW - (MS24693C6B)		4

-Item not illustrated

When ordering, always specify Part Number, Description, and Serial Number of Aircraft

FIGURE ITEM	PART NUMBER	NOMENCLATURE	EFFECT FROM TO	UNITS PER ASSY
72-				
44	472-054	. LAMP - 14 volt	3246001 thru 3246017	AR
-44A	472-028	. LAMP - 28 volt	3246018 and up 3257001 and up	AR
-45	456-703	. DIODE		AR

-Item not illustrated

When ordering, always specify Part Number, Description, and Serial Number of Aircraft

THIS PAGE INTENTIONALLY LEFT BLANK

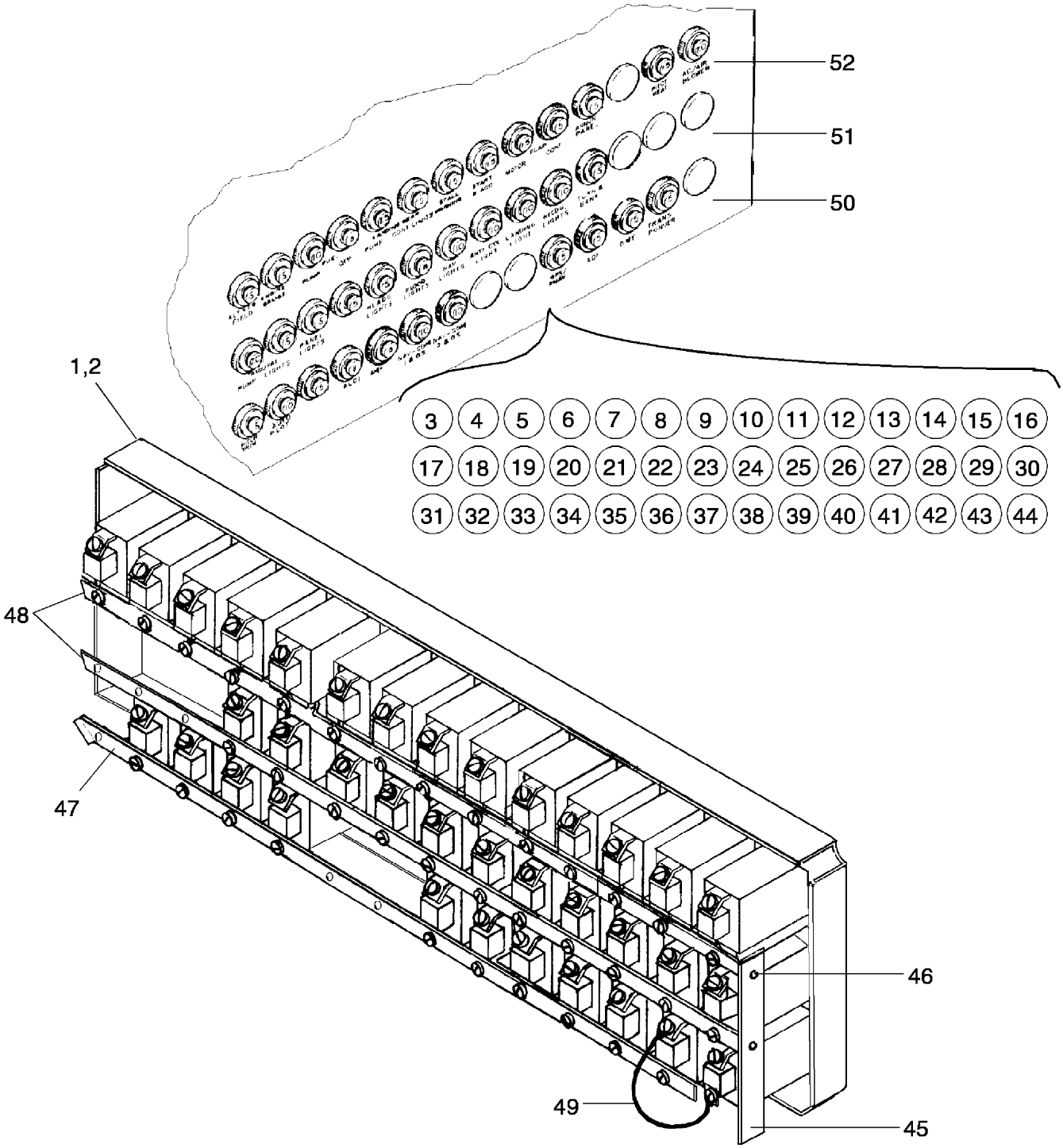

Figure 73. Circuit Breaker Panel Assembly
(Serial numbers 3246001 thru 3246087)

FIGURE ITEM	PART NUMBER	NOMENCLATURE	EFFECT FROM TO	UNITS PER ASSY
73	85295 (F)	DRAWING - Electrical Installation (14 volt)	3246001 thru 3246017	
	85455 (G)	DRAWING - Electrical Installation (28 volt)	3246018 thru 3246087	
	85308 (AA)	DRAWING - Circuit Breaker Panel Assy - Complete		
1	85308-002	PANEL ASSY - Circuit breaker, complete	3246001 thru 3246017	1
1	85308-003	PANEL ASSY - Circuit breaker, complete	3246018 thru 3246087	1
2	85307-002	. PANEL ASSY - Circuit breaker		1
3	454-738	. CIRCUIT BREAKER - 5A (Altntr field)		1
4	454-738	. CIRCUIT BREAKER - 5A (Engine gauge)		1
5	454-732	. CIRCUIT BREAKER - 10A (Fuel pump)		1
6	454-736	. CIRCUIT BREAKER - 3A (Fuel qty)		1
7	652-409	. CIRCUIT BREAKER - 25A (Land gear pump)		1
8	454-738	. CIRCUIT BREAKER - 5A (Land gear cont)		1
9	454-738	. CIRCUIT BREAKER - 5A (Stall warn)		1
10	454-734	. CIRCUIT BREAKER - 15A (Start & acc)		1
11	454-734	. CIRCUIT BREAKER - 15A (flap motor)		1
12	454-738	. CIRCUIT BREAKER - 5A (Flap cont)		1
13	454-738	. CIRCUIT BREAKER - 5A (Annun panel)		1
14	581-657	. PLUG BUTTON		1
15	454-734	. CIRCUIT BREAKER - 15A (Pitot heat)	3246001 thru 3246017	1
15	454-732	. CIRCUIT BREAKER - 10A (Pitot heat)	3246018 thru 3246087	1
16	454-797	. CIRCUIT BREAKER - 20A (AC/air blower)	3246001 thru 3246017	1
16	454-732	. CIRCUIT BREAKER - 10A (AC/air blower)	3246018 thru 3246087	
17	454-797	. CIRCUIT BREAKER - 20A (Aux vac pump)		1
18	454-738	. CIRCUIT BREAKER - 5A (Aux vac lights)		1
19	454-738	. CIRCUIT BREAKER - 5A (Panel lights)	3246001 thru 3246017	1
19	454-739	. CIRCUIT BREAKER - 7.5A (Panel/switch lights)	3246018 thru 3246087	1
20	454-738	. CIRCUIT BREAKER - 5A (Switch lights)	3246001 thru 3246017	1
-20A	454-738	. CIRCUIT BREAKER - 5A (Radio lights)	3246018 thru 3246087	1
21	454-738	. CIRCUIT BREAKER - 5A (Readg lights)		1
22	454-736	. CIRCUIT BREAKER - 3A (Flood lights)		1
23	454-732	. CIRCUIT BREAKER - 10A (Nav lights)		1
24	454-732	. CIRCUIT BREAKER - 10A (Anti coll lights)		1
25	454-732	. CIRCUIT BREAKER - 10A (Landing lights)	3246001 thru 3246017	1
25	454-734	. CIRCUIT BREAKER - 15A (Land/taxi lights)	3246018 thru 3246087	1
26	454-732	. CIRCUIT BREAKER - 10A (Recog lts)	3246001 thru 3246017	1
26	581-657	. PLUG BUTTON	3246018 thru 3246087	9
27	454-738	. CIRCUIT BREAKER - 5A (Turn and bank)		1
28	581-657	. PLUG BUTTON	3246001 thru 3246017	1
29	581-657	. PLUG BUTTON	3246001 thru 3246017	1
30	581-657	. PLUG BUTTON	3246001 thru 3246017	1
31	454-738	. CIRCUIT BREAKER - 5A (Pitch trim)		1
32	454-732	. CIRCUIT BREAKER - 10A (Auto pilot)		1
33	454-738	. CIRCUIT BREAKER - 5A (Compass)		1
34	454-755	. CIRCUIT BREAKER - 1A (Phone)	3246001 thru 3246017	1
35	454-736	. CIRCUIT BREAKER - 3A (Speaker)	3246001 thru 3246017	1
35	454-766	. CIRCUIT BREAKER - 2A (Audio/amp/mkr)	3246018 thru 3246087	1
36	454-732	. CIRCUIT BREAKER - 10A (Nav-com 1 & GS)		1
37	454-732	. CIRCUIT BREAKER - 10A (Nav-com 2 & GS)		1
38	581-657	. PLUG BUTTON	3246001 thru 3246017	1
39	581-657	. PLUG BUTTON	3246001 thru 3246017	1
40	454-738	. CIRCUIT BREAKER - 5A (GPS/RNAV)		1
41	454-738	. CIRCUIT BREAKER - 5A (ADF)		1

-Item not illustrated

When ordering, always specify Part Number, Description, and Serial Number of Aircraft

FIGURE ITEM	PART NUMBER	NOMENCLATURE	EFFECT FROM TO	UNITS PER ASSY
73-				
42	454-738	. CIRCUIT BREAKER - 5A (DME)		1
43	454-738	. CIRCUIT BREAKER - 5A (Transponder)		1
44	581-657	. PLUG BUTTON	3246001 thru 3246017	1
45	37365-004	. BUS		1
46	415-518	. SCREW - (MS35206-228)		2
-46A	690-639	. WASHER - (NAS1149FN616P)		AR
-46B	404-528	. NUT - (MS21042-06)		2
-46C	415-513	. SCREW - (MS35206-226)		AR
47	89276-010	. BUS		1
48	89276-003	. BUS		2
49	99983-173	WIRE ASSY		1
50	84967-125	PLACARD - Circuit breaker panel (See Figure 81)		RF
51	84967-126	PLACARD - Circuit breaker panel (See Figure 81)		RF
52	84967-127	PLACARD - Circuit breaker panel (See Figure 81)		RF

-Item not illustrated

When ordering, always specify Part Number, Description, and Serial Number of Aircraft

THIS PAGE INTENTIONALLY LEFT BLANK

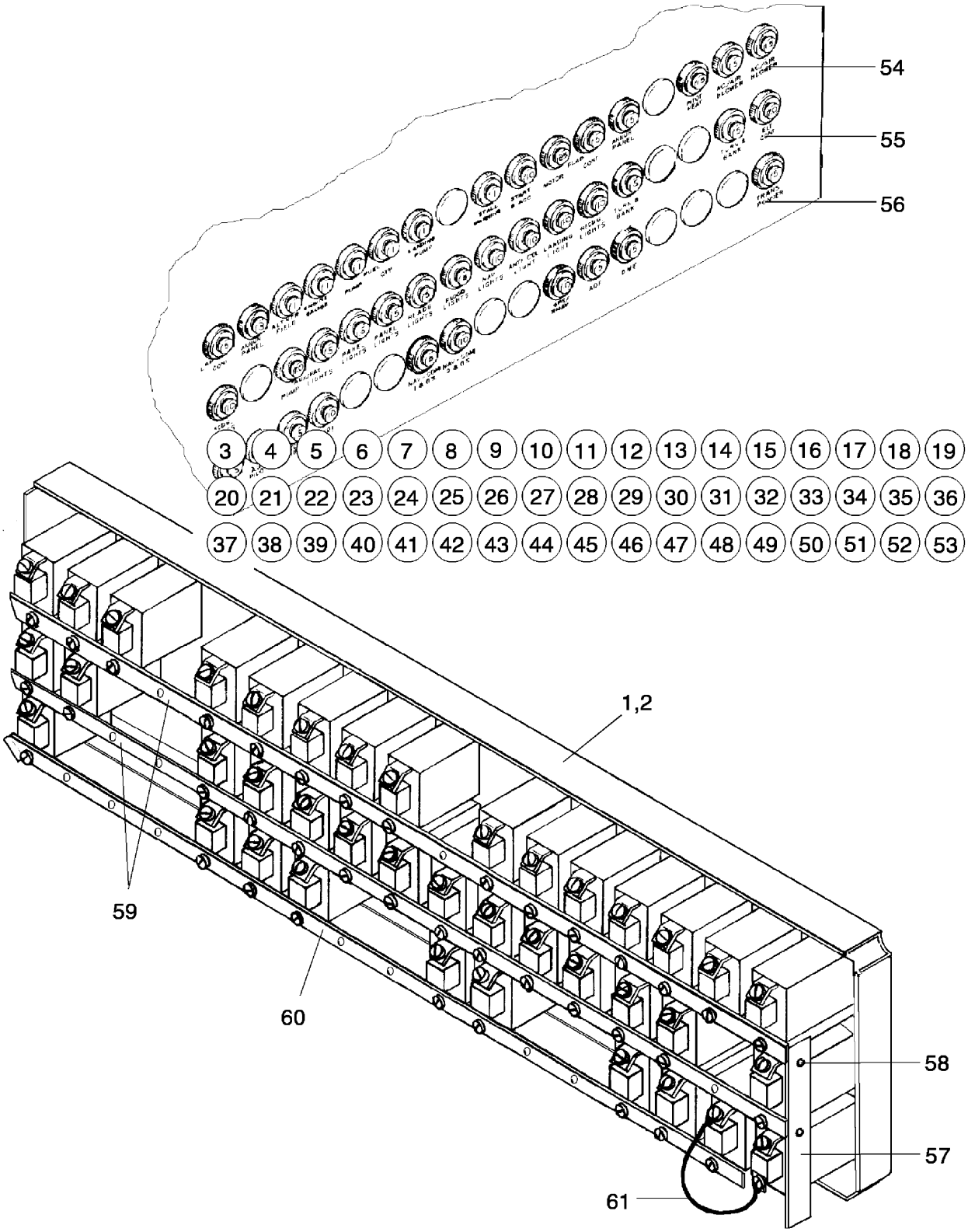

Figure 73A. Circuit Breaker Panel Assembly
(Serial numbers 3246088 and up; 3257001 and up)

FIGURE ITEM	PART NUMBER	NOMENCLATURE	EFFECT FROM TO	UNITS PER ASSY
73A	85308 (AA)	DRAWING - Circuit Breaker Panel Assy - Complete		
	100838 (P)	DRAWING - Electrical Installation	3246088 thru 3246125 3257001 thru 3257075	
	101300 (M)	DRAWING - Electrical Installation	3246126 thru 3246181 3257076 thru 3257198	
	104408 (Z)	DRAWING - Electrical Installation	3246182 and up 3257199 and up	
1	85308-004	PANEL ASSY - Circuit breaker, complete	3246088 thru 3246125 3257001 thru 3257075	1
1	85308-005	PANEL ASSY - Circuit breaker, complete (with 6th seat)	3246088 thru 3246125 3257001 thru 3257075	1
1	85308-006	PANEL ASSY - Circuit breaker, complete	3246126 and up 3257076 and up	1
1	85308-007	PANEL ASSY - Circuit breaker, complete (with 6th seat)	3246126 and up 3257076 and up	1
2	85307-004	. PANEL ASSY - Circuit breaker	3246088 and up	1
3	454-738	. CIRCUIT BREAKER - 5A (Altnr field)		1
4	454-736	. CIRCUIT BREAKER - 3A (Eng monitor)		1
5	454-755	. CIRCUIT BREAKER - 1A (Map)	3246088 thru 3246125 3257001 thru 3257075	1
6	454-755	. CIRCUIT BREAKER - 1A (RPM)		1
7	454-755	. CIRCUIT BREAKER - 1A (TIT/FF)		1
8	454-755	. CIRCUIT BREAKER - 1A (CHT/VAC)		1
9	454-755	. CIRCUIT BREAKER - 1A (Oil temp/oil press)		1
10	581-657	. PLUG BUTTON		1
11	454-755	. CIRCUIT BREAKER - 1A (Fuel qty)		1
12	454-732	. CIRCUIT BREAKER - 10A (Fuel pump)		1
13	652-409	. CIRCUIT BREAKER - 25A (Landing gear pump)		1
14	454-738	. CIRCUIT BREAKER - 5A (Landing gear cont)		1
15	454-738	. CIRCUIT BREAKER - 5A (Stall warn)		1
16	581-657	. PLUG BUTTON		1
17	454-734	. CIRCUIT BREAKER - 15A (Start and acc)		1
18	454-738	. CIRCUIT BREAKER - 5A (Flap cont)		1
19	454-734	. CIRCUIT BREAKER - 15A (Flap motor)		1
20	454-738	. CIRCUIT BREAKER - 5A (Annun panel)		1
21	581-657	. PLUG BUTTON		1
22	454-732	. CIRCUIT BREAKER - 10A (Pitot heat)		1
23	454-732	. CIRCUIT BREAKER - 10A (Air cond/air blower)		1
24	454-797	. CIRCUIT BREAKER - 20A (Aux vac pump)		1
25	454-738	. CIRCUIT BREAKER - 5A (Aux vac lights)		1
26	454-739	. CIRCUIT BREAKER - 7.5A (Pnl/Sw. lights)		1
27	454-738	. CIRCUIT BREAKER - 5A (Radio lights)		1
28	454-738	. CIRCUIT BREAKER - 5A (Reading lights)		1
29	454-736	. CIRCUIT BREAKER - 3A (Flood lights)		1
30	454-732	. CIRCUIT BREAKER - 10A (Anti/coll lights)		1
31	454-732	. CIRCUIT BREAKER - 10A (Nav lights)		1
32	454-734	. CIRCUIT BREAKER - 15A (Land/taxi lights)		1
33	581-657	. PLUG BUTTON		1
34	581-657	. PLUG BUTTON		1
35	454-766	. CIRCUIT BREAKER - 2A (Turn and bank)		1
36	454-738	. CIRCUIT BREAKER - 5A (Ent console) (Installed as standard equipment)	3246088 thru 3246181 3257001 thru 3257198	1

-Item not illustrated

When ordering, always specify Part Number, Description, and Serial Number of Aircraft

FIGURE ITEM	PART NUMBER	NOMENCLATURE	EFFECT FROM TO	UNITS PER ASSY
73A-				
-36A	581-657	. PLUG BUTTON		1
		(Installed with optional equipment)		
37	454-766	. CIRCUIT BREAKER - 2A (Pitch trim)		1
38	454-738	. CIRCUIT BREAKER - 5A (Auto/pilot)		1
39	454-738	. CIRCUIT BREAKER - 5A (Compass)		1
40	454-738	. CIRCUIT BREAKER - 5A (Audio Amp/Mkr)		1
41	581-657	. PLUG BUTTON		1
42	581-657	. PLUG BUTTON		1
43	454-732	. CIRCUIT BREAKER - 10A (NAV-COM 1 & G/S)		1
44	454-732	. CIRCUIT BREAKER - 10A (NAV-COM 2 & G/S)		1
45	581-657	. PLUG BUTTON		1
46	581-657	. PLUG BUTTON		1
47	454-738	. CIRCUIT BREAKER - 5A (GPS1)		1
47	454-738	. CIRCUIT BREAKER - 5A (GPS2)		1
48	454-766	. CIRCUIT BREAKER - 2A (ADF)		1
49	454-736	. CIRCUIT BREAKER - 3A (DME)		1
50	581-657	. PLUG BUTTON		1
		(Installed as standard equipment)		
51	581-657	. PLUG BUTTON		1
52	581-657	. PLUG BUTTON		1
		(Installed as standard equipment)		
53	454-736	. CIRCUIT BREAKER - 3A (Transponder)		1
54	100835-005	. PLACARD - Circuit breaker panel, top (See Fig. 81)		RF
	100835-003	. PLACARD - Circuit breaker panel, top (See Fig. 81)		RF
55	100835-002	. PLACARD - Circuit breaker panel, center (See Fig. 81)		RF
56	100835-006	. PLACARD - Circuit breaker panel, bottom (See Fig. 81)		RF
57	37365-004	. BUS		1
58	415-518	. SCREW - (MS35206-228)		2
-58A	690-639	. WASHER - (NAS1149FN616P)		AR
-58B	404-528	. NUT - (MS21042-06)		2
-58C	415-513	. SCREW - (MS35206-226)		AR
59	89276-016	. BUS		AR
60	89276-011	. BUS	3246088 thru 3246125 3257001 thru 3257075	1
61	99983-173	WIRE ASSY		1
-62	415-319	SCREW - (MS27039-1-09)		1
-62A	407-043	WASHER - (MS35338-43)		1
-62B	690-609	WASHER - (NAS1149F0332P)		1
-62C	404-224	NUT - (AN315-3R)		1

-Item not illustrated

When ordering, always specify Part Number, Description, and Serial Number of Aircraft

THIS PAGE INTENTIONALLY LEFT BLANK

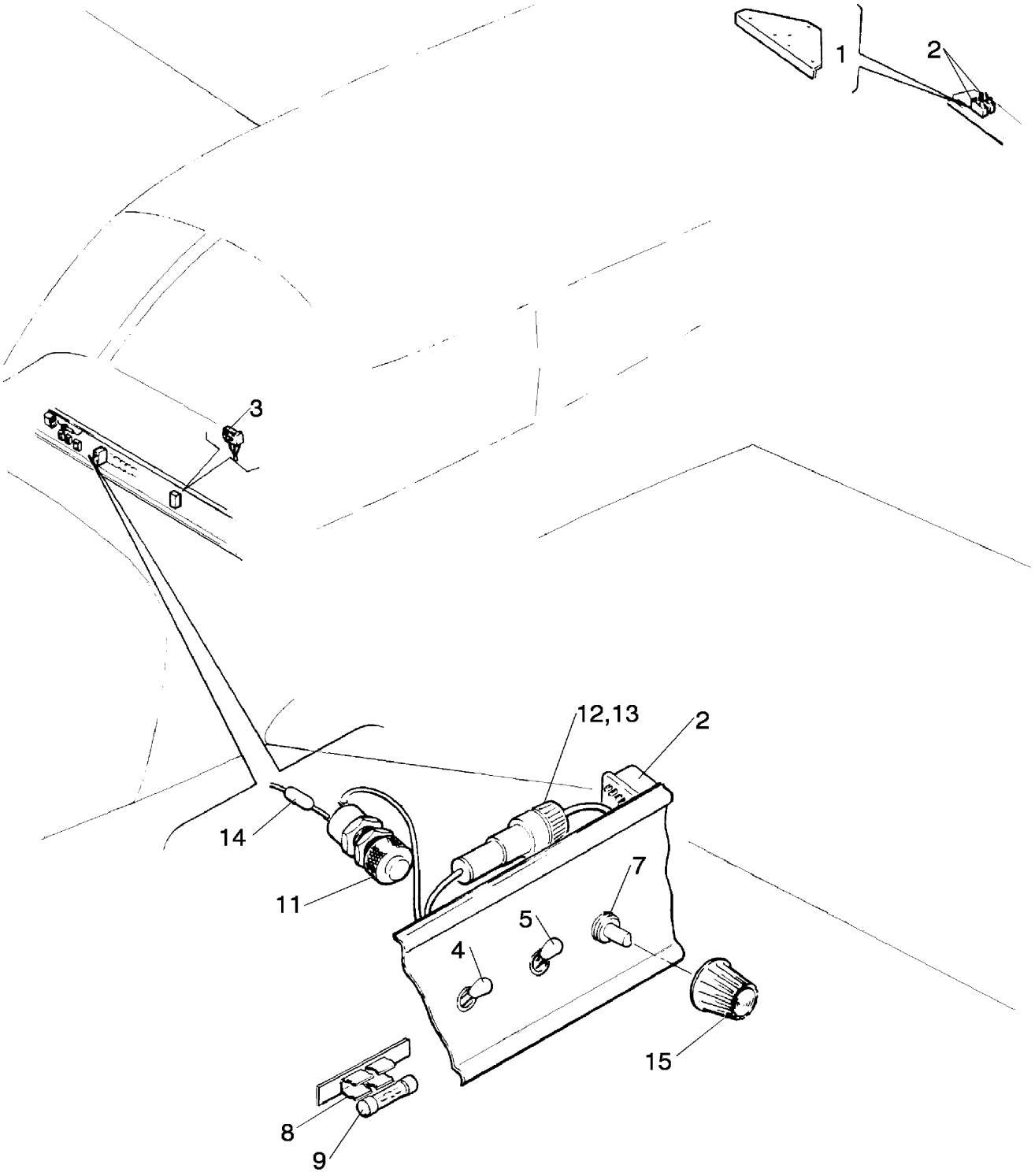

Figure 74. Air Conditioning Electrical Installation

FIGURE ITEM	PART NUMBER	NOMENCLATURE	EFFECT FROM TO	UNITS PER ASSY
74	100838 (P)	DRAWING - Electrical Installation	3246088 thru 3246125 3257001 thru 3257075	
	101300 (M)	DRAWING - Electrical Installation	3246126 thru 3246181 3257076 thru 3257198	
	104408 (P)	DRAWING - Electrical Installation	3246182 and up 3257199 and up	
	99750 (V)	DRAWING - Air Conditioning Installation	3246001 thru 3246017	
	85506 (D)	DRAWING - Air Conditioning Installation	3246018 and up 3257001 and up	
1	99862-000	MOUNT ASSY - Relay		1
2	484-209	RELAY - 14 volt	3246001 thru 3246017	2
2	686-820	RELAY - 28 volt	3246018 and up 3257001 and up	2
3	38094-002	SWITCH - Throttle limit (with actuator)		1
4	587-903	SWITCH - (MS35058-22)	3246001 thru 3246017	1
4	688-296	SWITCH	3246018 and up 3257001 and up	1
-4A	654-531	SWITCH - Cap	3246018 and up 3257001 and up	1
5	688-235	SWITCH	3246001 thru 3246017	1
5	688-298	SWITCH	3246018 and up 3257001 and up	1
-5A	654-534	SWITCH - Cap	3246018 and up 3257001 and up	1
7	99717-000	THERMOSTAT - Air conditioning		1
8	99999-000	HOLDER ASSY - Fuse		1
9	461-629	. FUSE		2
11	472-054	BULB	3246001 thru 3246017	1
11	472-054	BULB	3246018 and up 3257001 and up	4
12	465-258	HOLDER - Fuse		3
13	461-629	FUSE		3
14	484-467	RESISTOR		1
15	571-162	KNOB - Control head		1
-16	63976-022	GROMMET		2
-17	63976-050	GROMMET		1
-18	63976-051	GROMMET		2
-19	454-868	CLAMP		1
-20	487-722	CLAMP		AR
-21	487-608	CLAMP		1
-22	554-764	CLAMP		2
-23	554-952	CLAMP		1
-24	554-955	CLAMP		AR
-25	690-616	WASHER - (NAS1149FN832P)		AR
-26	690-618	WASHER - (NAS1149FN816P)		7
-27	407-120	WASHER - (AN936-B8)		1
-28	404-529	NUT - (MS21042-08)		7
-29	690-612	WASHER - (NAS1149FN363P)	3246001 thru 3246125 3257001 thru 3257075	1
-30	408-043	WASHER - (MS35333-38)	3246001 thru 3246125 3257001 thru 3257075	1
-31	404-526	NUT - (MS21042-3)	3246001 thru 3246125 3257001 thru 3257075	1

-Item not illustrated

When ordering, always specify Part Number, Description, and Serial Number of Aircraft

FIGURE ITEM	PART NUMBER	NOMENCLATURE	EFFECT FROM TO	UNITS PER ASSY
74-				
-32	415-533	SCREW - (MS35206-243)		7
-33	415-544	SCREW - (MS35206-244)		1
-34	415-535	SCREW - (MS35206-245)		AR
-35	411-531	SCREW - (MS35207-262)		AR
-36	406-357	NUT - (A190-832-1)	3246001 thru 3246125 3257001 thru 3257075	1
-37	406-373	NUT - (NAS395-17-1)	3246126 and up 3257001 thru 3257075	3
-38	85345-002	HARNESS ASSY - Complete	3246001 thru 3246017	1
-39	85345-003	HARNESS ASSY - Complete	3246018 thru 3246125 3257001 thru 3257075	1
-40	101284-004	HARNESS ASSY - Aft	3246126 and up 3257076 and up	1
-41	101284-005	HARNESS ASSY - Forward	3246126 and up	1
-42	419-920	SCREW	3246126 and up 3257076 and up	3

-Item not illustrated

When ordering, always specify Part Number, Description, and Serial Number of Aircraft

THIS PAGE INTENTIONALLY LEFT BLANK

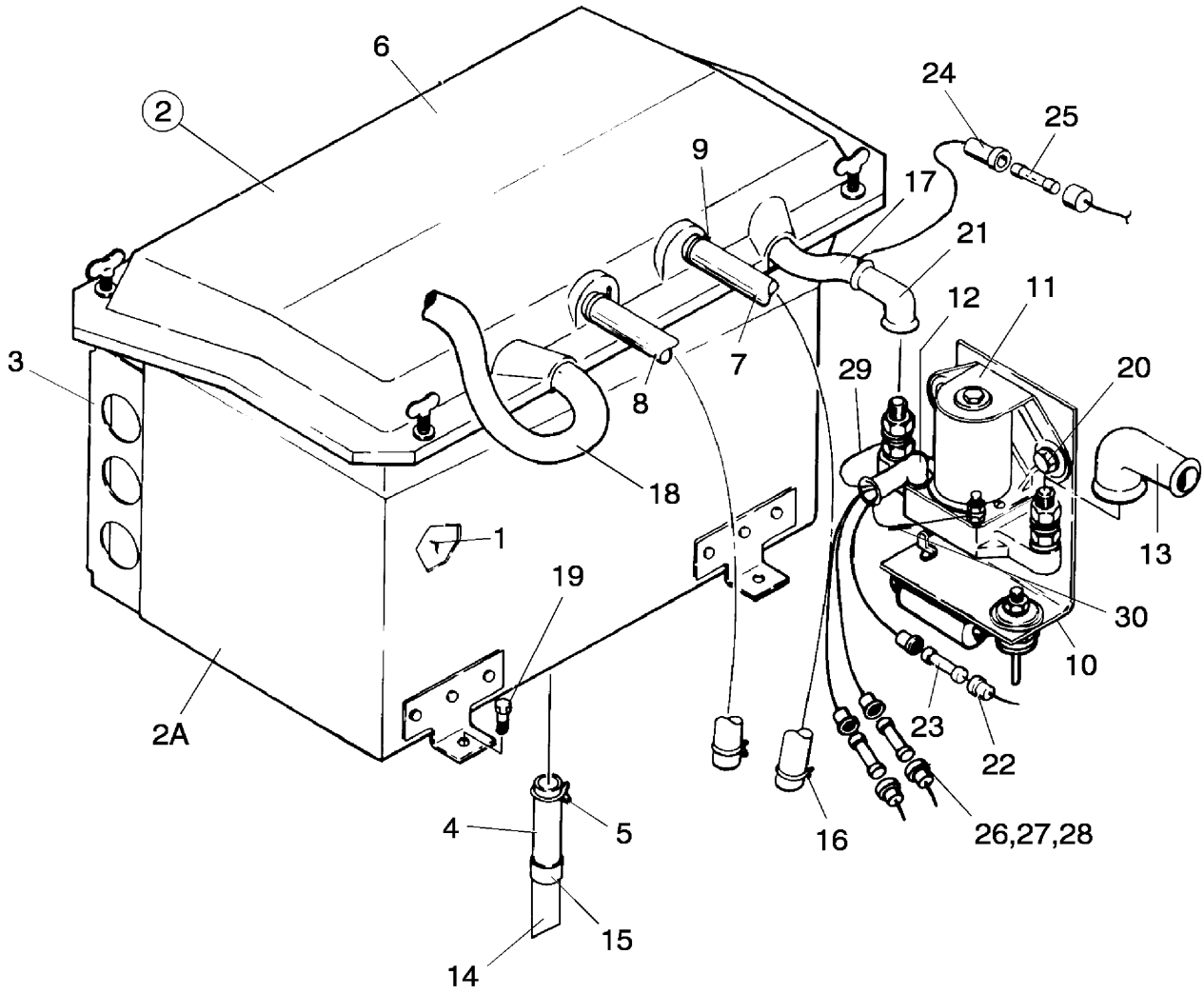

Figure 75. Battery Box Installation (Serial numbers 3246001 thru 3246017)

FIGURE ITEM	PART NUMBER	NOMENCLATURE	EFFECT FROM TO	UNITS PER ASSY
75	85295 (F)	DRAWING - Electrical System Installation	3246001 thru 3246017	
1	450-035	BATTERY - 25 Ampere hour		1
2	38062-020	BOX ASSY - Battery		1
2A	38062-019	. PAN ASSY - Battery box		1
3	38062-010	. . BRACKET ASSY - Mounting		2
4	63904-119	. . HOSE - Drain		1
5	554-678	. . CLAMP		1
6	38062-004	. LID ASSY - Battery box		1
7	63904-064	. . HOSE - Battery vent left		1
8	63904-087	. . HOSE - Battery vent right		1
9	554-678	. . CLAMP - (SAE TY-E8)		2
10	62279-000	DIODE ASSY - Master relay		1
-10A	401-307	BOLT - (AN4-4A)		2
-10B	407-801	WASHER - (AN970-4)		2
11	455-151	RELAY - Power		1
12	23969-002	NIPPLE		2
-12A	407-043	WASHER - Lock		2
-12B	404-526	NUT - Self locking (MS21042-3)		2
13	66580-002	NIPPLE		1
14	86238-151	TUBE - Vent (90 degree bend)		1
15	453-838	BUSHING - Snap		1
16	554-678	CLAMP - (SAE TY-E8)		2
17	69325-130	WIRE ASSY - Positive (10.00”)		1
18	69325-129	WIRE ASSY - Ground (10.50”)		1
-18A	400-002	BOLT - (AN4-5A)		1
-18B	690-611	WASHER - (NAS1149F0463P)		1
-18C	407-136	WASHER - (AN936A416)		2
-18D	404-530	NUT - (MS21042-4)		1
19	401-306	BOLT - (AN3-4A)		6
20	401-307	BOLT - (AN4-4A)		2
-20A	407-801	WASHER - (AN970-4)		2
21	23969-005	NIPPLE		1
22	79595-019	FUSE ASSY - Voltage spike suppression		1
23	461-657	. FUSE - 1 amp		1
24	79595-020	FUSE ASSY - Hour meter and clock		1
25	461-629	. FUSE - 5 amp		1
26	87502-003	FUSE ASSY - Ground clearance switch		1
27	461-648	. FUSE - Com/Nav 1, 10 amp		1
28	461-629	. FUSE - Audio Panel, 5 amp		1
29	63862-028	WIRE ASSY - Jumper		1
30	67487-005	WIRE ASSY - Diode		1

-Item not illustrated

When ordering, always specify Part Number, Description, and Serial Number of Aircraft

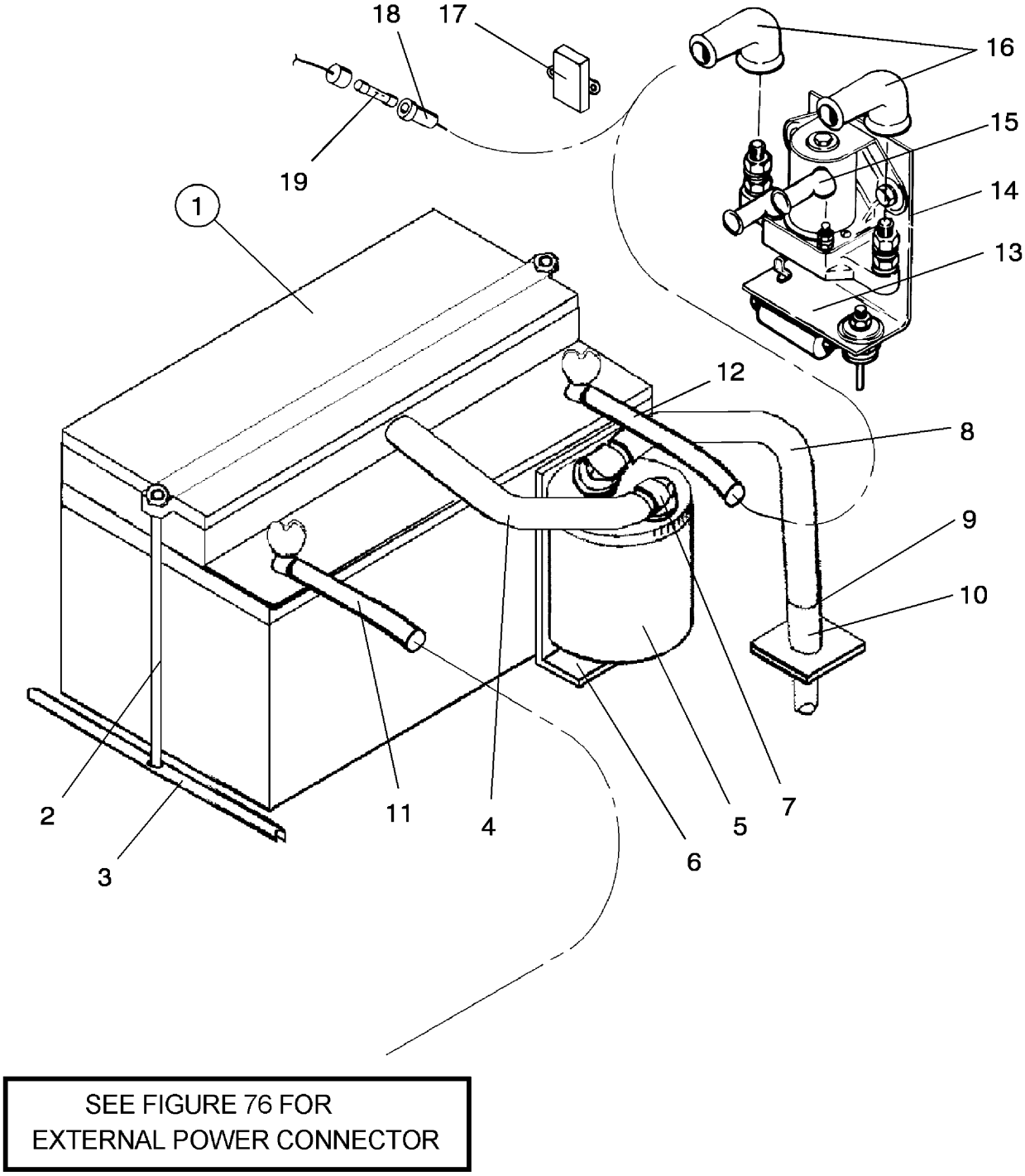

Figure 75A. Battery Box Installation (Serial numbers 3246018 and up; 3257001 and up)

FIGURE ITEM	PART NUMBER	NOMENCLATURE	EFFECT FROM TO	UNITS PER ASSY
75A	85455 (G)	DRAWING - Electrical System Installation	3246018 thru 3246087	
	85504	DRAWING - Battery and Power Receptacle Installation	3246018 thru 3246087	
	87502 (P)	DRAWING - Fuse Assy	3246018 and up 3257001 and up	
	100838 (P)	DRAWING - Electrical System Installation	3246088 thru 3246125 3257001 thru 3257075	
	101000 (E)	DRAWING - Battery, External Power Receptacle and Relay Panel Installation	3246088 and up 3257001 and up	
	101300 (M)	DRAWING - Electrical System Installation	3246126 thru 3246181 3257076 thru 3257198	
	104408 (Z)	DRAWING - Electrical System Installation	3246182 and up 3257199 and up	
1	450-101	BATTERY - 24 volt (Battery located forward left on serial numbers 3246018 thru 3246087. Battery located aft right on serial numbers 3246088 and up and on serial numbers 3257001 and up)		1
2	100575-002	BOLT	3246018 thru 3246087	2
2	400-496	BOLT - (AN3-73A)	3246088 and up 3257001 and up	2
-2A	407-800	WASHER - (AN970-3)		2
-2B	84316-002	INSULATOR - Battery		2
-2C	404-526	NUT - (MS21042-3)	3246018 thru 3246087	2
3	100575-011	CHANNEL	3246018 thru 3246087	2
4	85504-012	TUBE	3246018 thru 3246087	1
-4A	65653-019	TUBE	3246088 and up 3257001 and up	1
-4B	101000-003	TUBE	3246088 and up 3257001 and up	1
5	468-029	SUMP JAR ASSY		1
-5A	411-534	SCREW - (MS35207-265)	3246088 and up 3257001 and up	2
-5B	690-612	WASHER - (NAS1149FN363P)	3246088 and up 3257001 and up	2
6	85415-002	BRACKET - Sump jar	3246018 thru 3246087	1
-6A	400-440	BOLT - (AN3-6A)	3246018 thru 3246087	2
7	559-031	ELBOW		AR
8	85504-013	TUBE	3246018 thru 3246087	1
-8A	101000-004	TUBE	3246088 and up 3257001 and up	1
9	488-722	TY-WRAP - (MS3367-4-9)		AR
10	85412-002	VENT		1
11	69325-129	WIRE ASSY - Ground	3246018 thru 3246087	1
-11A	400-002	BOLT - (AN4-5A)	3246018 thru 3246087	1
-11B	407-565	WASHER - (AN960-416)	3246018 thru 3246087	1
-11C	407-136	WASHER - (AN936-A416)	3246018 thru 3246087	2
-11D	404-530	NUT - (MS21042-4)	3246018 thru 3246087	1
12	69325-130	WIRE ASSY - Positive	3246018 thru 3246087	1
13	62279-000	DIODE ASSY	3246018 thru 3246087	1
14	455-211	RELAY - Power	3246018 thru 3246087	1
15	476-683	NIPPLE		2
16	476-695	NIPPLE		2
17	38905-003	SWITCH - Alternator inop.		1

-Item not illustrated

When ordering, always specify Part Number, Description, and Serial Number of Aircraft

FIGURE ITEM	PART NUMBER	NOMENCLATURE	EFFECT FROM TO	UNITS PER ASSY
75A-				
18	79595-020	FUSE ASSY - (See Figure 69)		RF
19	461-629	. FUSE - 5 amp (See Figure 69)		RF
-20A	411-531	SCREW - (MS35207-262)	3246088 and up 3257001 and up	3
-20B	690-612	WASHER - (NAS1149FN363P)	3246088 and up 3257001 and up	3
-21	89344-006	ANGLE	3246088 and up 3257001 and up	1
-21A	415-535	SCREW	3246088 and up 3257001 and up	2
-21B	690-616	WASHER - (NAS1149FN832P)	3246088 and up 3257001 and up	2
-22	85504-011	BRACE	3246018 thru 3246087	1
-22A	400-438	BOLT - (AN3-4A)	3246018 thru 3246087	1
-23	484-190	RELAY	3246018 thru 3246087	1
-23A	416-785	SCREW - (MS24693-S272)	3246018 thru 3246087	2
-23B	508-008	WASHER	3246018 thru 3246087	2
-23C	404-526	NUT - (MS21042-3)	3246018 thru 3246087	2
-24	101096-002	SUPPORT ASSY	3246088 and up 3257001 and up	1
-24A	415-308	SCREW - (MS27039-0808)	3246088 and up 3257001 and up	1
-24B	407-583	WASHER - (AN960-8L)	3246088 and up 3257001 and up	1
-25	683-315	DECAL	3246088 and up 3257001 and up	1
-26	73508-002	BUS	3246088 and up	1
-26A	401-390	BOLT - (AN6-6A)	3246088 and up 3257001 and up	1
-26B	490-629	WASHER - (NAS1149F0663P)	3246088 and up 3257001 and up	1
-27	87502-015	FUSE ASSY - (Optional) 28 VDC	3246018 and up 3257001 and up	1
-27A	461-629	. FUSE - 5 amp	3246018 and up 3257001 and up	1
-27B	87502-016	FUSE ASSY - (Optional) 28 VDC	3246018 and up 3257001 and up	1
-27C	461-629	. FUSE - 5 amp	3246018 and up 3257001 and up	1
-27D	87502-019	FUSE ASSY - 28 VDC	3246018 and up 3257001 and up	1
-27E	461-649	. FUSE	3246018 and up 3257001 and up	1

-Item not illustrated

When ordering, always specify Part Number, Description, and Serial Number of Aircraft

THIS PAGE INTENTIONALLY LEFT BLANK

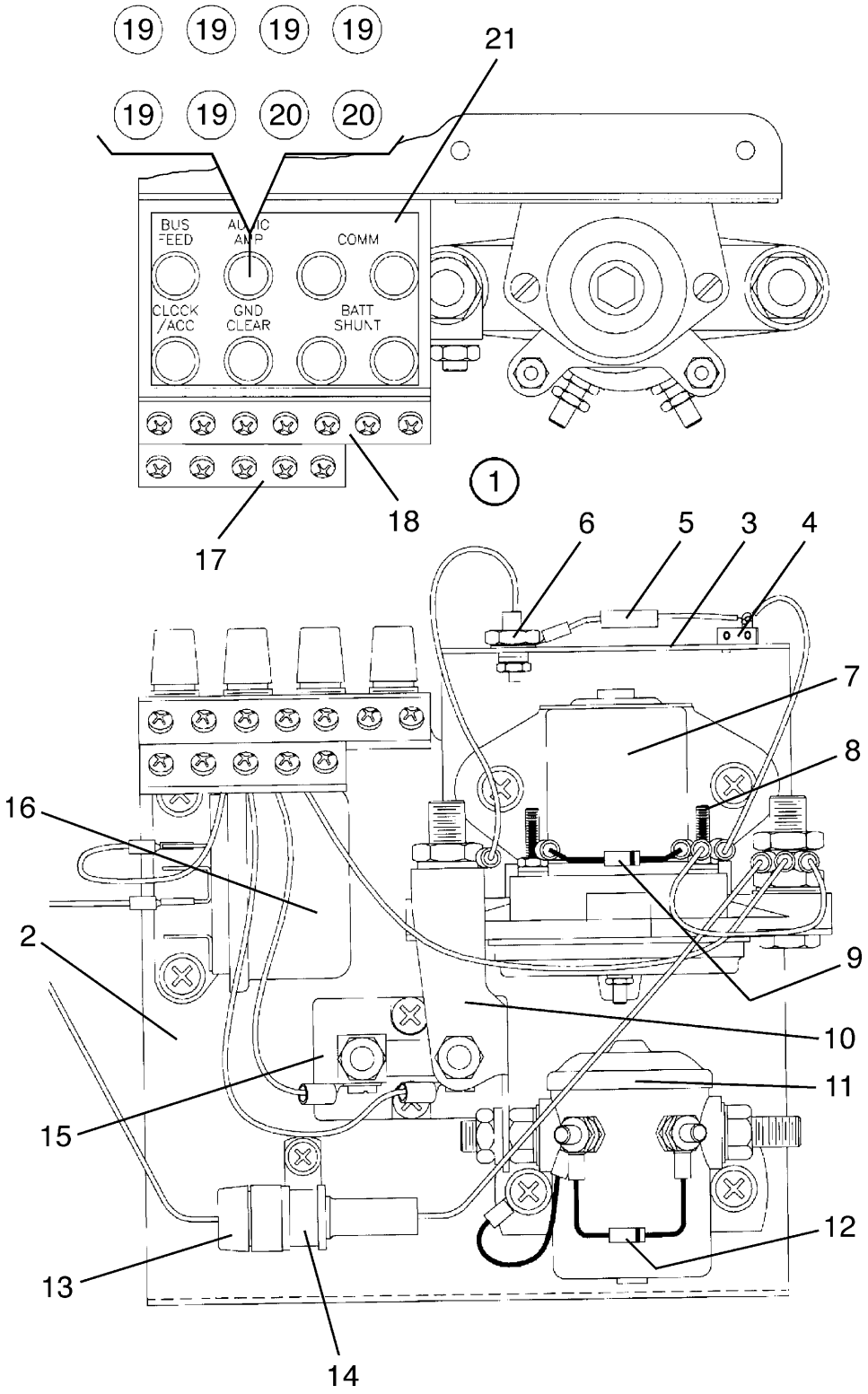

Figure 75B. Master Electrical Panel (serial numbers 3246088 and up; 3257001 and up)

FIGURE ITEM	PART NUMBER	NOMENCLATURE	EFFECT FROM TO	UNITS PER ASSY
75B	100918	DRAWING - Panel Assy	3246088 and up 3257001 and up	
1	100918-002	PANEL ASSY - Master electrical		1
2	100967-002	. PLATE ASSY		1
3	62279-002	. DIODE ASSY		1
4	487-678	. . TERMINAL STRIP		1
5	461-627	. . RESISTOR		1
6	456-728	. . DIODE		1
-6A	488-389	. . TERMINAL		1
-6B	690-613	. . WASHER - (NAS1149F0432P)		1
-6C	408-051	. . WASHER - (MS35333-40)		1
-6D	404-322	. . NUT - (AN316-4R)		1
7	455-211	. RELAY		1
-7A	411-532	. SCREW - (MS35207-263)		2
-7B	690-612	. WASHER - (NAS1149FN363P)		2
8	476-673	. NIPPLE - (MS25171-1S)		2
9	67487-005	. DIODE ASSY		1
10	100972-002	. BUSS BAR		1
11	487-167	. RELAY		1
-11A	411-532	. SCREW - (MS35207-263)		2
-11B	690-612	. WASHER - (NAS1149FN363P)		2
12	67487-003	. DIODE ASSY		1
13	100918-003	. FUSE ASSY		1
-13A	461-653	. . FUSE - 15 amp		1
14	554-957	. CLAMP		1
-14A	411-532	. SCREW - (MS35207-263)		1
-14B	690-612	. WASHER - (NAS1149FN363P)		1
15	486-684	. SHUNT - (MS591586-6)		1
-15A	411-534	. SCREW - (MS35207-265)		2
16	584-280	. RELAY		1
-16A	411-532	. SCREW - (MS35207-263)		2
-16B	407-564	. WASHER - (NAS1149FN363P)		2
17	487-672	. TERMINAL STRIP		1
-17A	415-385	. SCREW - (MS51957-29)		2
-17B	404-902	. NUT - (MS20365-632C)		2
18	487-654	. TERMINAL STRIP		1
-18A	415-385	. SCREW - (MS51957-29)		2
-18B	404-902	. NUT - (MS20365-632C)		2
19	461-660	. FUSE HOLDER		6
-19A	461-659	. FUSE - 5 amp		6
20	461-660	. FUSE HOLDER		2
-20A	461-684	. FUSE - 1 amp		2
21	100917-002	. PLACARD		1

-Item not illustrated

When ordering, always specify Part Number, Description, and Serial Number of Aircraft

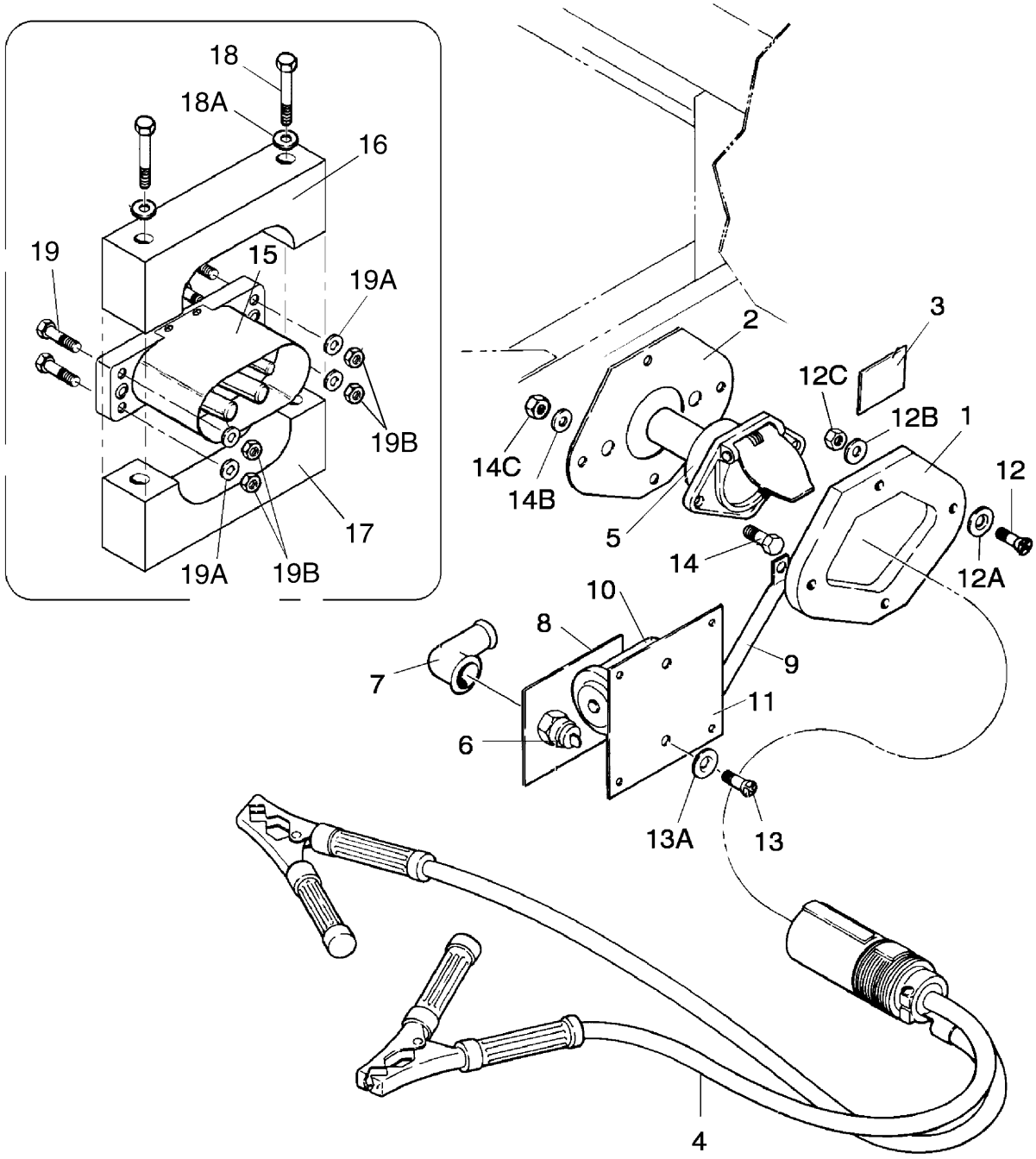

Figure 76. External Power Supply Installation

FIGURE ITEM	PART NUMBER	NOMENCLATURE	EFFECT FROM TO	UNITS PER ASSY
76	85455 (G)	DRAWING - Electrical Installation	3246018 thru 3246087	
	100838 (P)	DRAWING - Electrical Installation	3246088 thru 3246125 3257001 thru 3257075	
	101300 (M)	DRAWING - Electrical Installation	3246126 thru 3246181 3257076 thru 3257198	
	104408 (P)	DRAWING - Electrical Installation	3246182 and up 3257199 and up	
	38143 (S)	DRAWING - External Power Supply Installation	3246001 thru 3246017	
	85504 (NEW)	DRAWING - External Power Supply Installation	3246018 thru 3246087	
	101000 (E)	DRAWING - External Power Supply Installation	3246088 and up 3257001 and up	
1	62226-000	SPACER - External power receptacle (Used with 14 volt system)	3246001 thru 3246017	1
2	62227-000	PLATE - External power receptacle	3246001 thru 3246017	1
3	69669-173	PLACARD - External power	3246001 thru 3246017	1
4	89097-002	PLUG ASSY - Power connector	3246001 thru 3246017	1
5	89097-003	SOCKET ASSY - Power connector	3246001 thru 3246017	1
6	456-728	DIODE	3246001 thru 3246017	1
7	23969-005	NIPPLE	3246001 thru 3246017	1
8	68198-000	SUPPORT - Diode	3246001 thru 3246017	1
9	38143-004	TUBE - Support	3246001 thru 3246017	1
10	484-373	RELAY - Power	3246001 thru 3246017	1
11	38143-003	PLATE - Relay support	3246001 thru 3246017	1
12	416-794	SCREW - (MS24693-S275)	3246001 thru 3246017	4
12A	494-087	WASHER	3246001 thru 3246017	4
12B	690-612	WASHER - (NAS1149FN363P)	3246001 thru 3246017	4
12C	404-156	NUT - (MS21083N3)	3246001 thru 3246017	4
13	416-785	SCREW - (MS24693-S272)	3246001 thru 3246017	2
13A	494-087	WASHER	3246001 thru 3246017	2
-13B	407-800	WASHER - (AN970-3)	3246001 thru 3246017	2
-13C	404-526	NUT - (MS21042-3)	3246001 thru 3246017	2
14	400-728	BOLT - (AN25-11A)	3246001 thru 3246017	2
-14A	690-628	WASHER - (NAS1149F0563P)	3246001 thru 3246017	2
14B	407-045	WASHER - (MS35338-45)	3246001 thru 3246017	2
14C	404-323	NUT - (AN316-5R)	3246001 thru 3246017	2
15	484-125	RECEPTACLE - External power (Used with 28 volt system)	3246018 and up 3257001 and up	1
16	100576-002	BLOCK - Lower	3246018 thru 3246087	1
16	74075-002	BLOCK - Lower	3246088 and up 3257001 and up	1
17	100756-002	BLOCK - Upper	3246018 thru 3246087	1
17	74075-003	BLOCK - Upper	3246088 and up 3257001 and up	1
18	400-025	BOLT - (AN4-33A)	3246018 thru 3246087	2
18	401-291	BOLT - (AN4-44A)	3246088 and up 3257001 and up	2
18A	690-611	WASHER - (NAS1149F0463P) (Double this quantity for PA-32R-301, serial numbers 3246018 thru 3246087)		2
-18B	404-530	NUT - (MS21042-4)	3246018 thru 3246087	2
19	401-269	BOLT - (AN3-10A)	3246018 thru 3246087	4
19	400-441	BOLT - (AN3-7A)	3246088 and up 3257001 and up	4

-Item not illustrated

When ordering, always specify Part Number, Description, and Serial Number of Aircraft

FIGURE ITEM	PART NUMBER	NOMENCLATURE	EFFECT FROM TO	UNITS PER ASSY
76-				
19A	690-612	WASHER - (NAS1149FN363P) (Double this quantity for PA-32R-301, serial numbers 3246018 thru 3246087)		4
19B	404-526	NUT - (MS21042-3)	3246018 and up 3257001 and up	4
-20	100577-002	BRACKET - External power receptacle	3246018 thru 3246087	1

-Item not illustrated

When ordering, always specify Part Number, Description, and Serial Number of Aircraft

THIS PAGE INTENTIONALLY LEFT BLANK

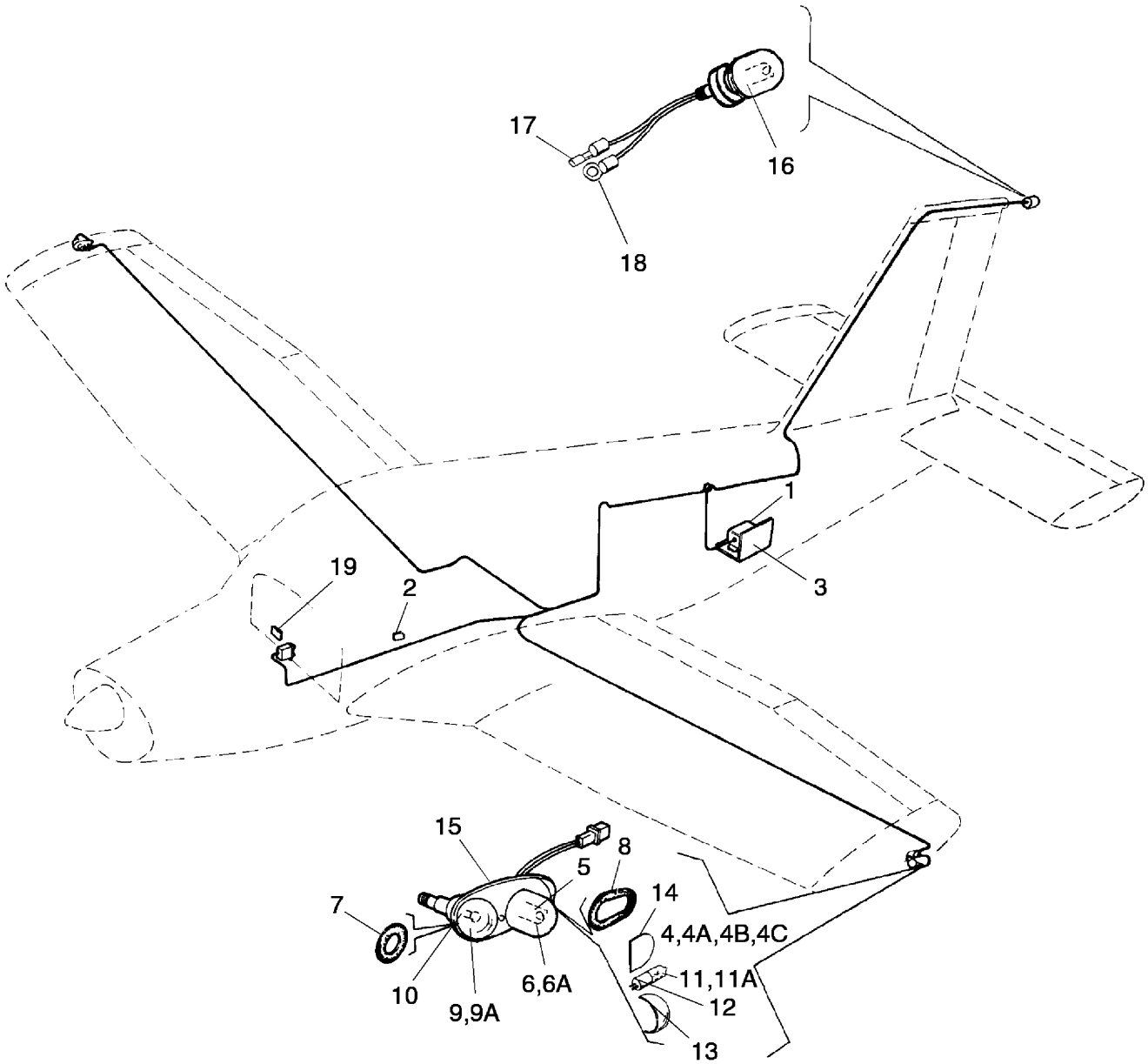

Figure 78. Strobe Lights Installation

FIGURE ITEM	PART NUMBER	NOMENCLATURE	EFFECT FROM TO	UNITS PER ASSY
78	36789 (AR)	DRAWING - Wing Tip Strobe Lights Installation	3246001 thru 3246017	
	85505 (J)	DRAWING - Wing Tip Strobe Lights Installation	3246018 and up 3257001 and up	
	65213 (W)	DRAWING - Ground Assy Wing Tip	3246018 and up 3257001 and up	
1	481-247	POWER SUPPLY - Strobe lights		1
-1A	407-120	WASHER - (AN936-B8)	3246001 thru 3246017	2
-1B	415-544	SCREW - (MS35206-244)		3
-1C	415-535	SCREW - (MS35206-245)		1
-1D	653-623	FIN STROBE CABLE ASSY	3246154 and up 3257124 and up	1
-1E	408-105	WASHER - (MS353335-31)	3246018 and up 3257001 and up	2
-1F	690-616	WASHER - (NAS1149FN832P)		2
2	69669-175	PLACARD - Warning		1
3	99031-000	BRACKET ASSY - Power supply mounting		1
4	572-557	LIGHT ASSY - Red navigation and white strobe, wing tip, (shielded)	3246001 thru 3246017	1
4A	572-593	LIGHT ASSY - Red navigation and white strobe, wing tip, (shielded)	3246018 and up 3257001 and up	1
4B	572-561	LIGHT ASSY - Green navigation and white strobe, wing tip (shielded)	3246001 thru 3246017	1
4C	572-592	LIGHT ASSY - Green navigation and white strobe, wing tip (shielded)	3246018 and up 3257001 and up	1
5	762-003	. TUBE ASSY - Flash tip		1
6	761-253	. LENS AND RETAINER ASSY - Wing tip strobe (shieIded)		1
6A	761-254	. LENS AND RETAINER ASSY - Wing tip strobe (shielded)		1 1
7	755-075	. GASKET - Navigation light		1
8	755-076	. GASKET - Wing strobe		1
9	751-202	. LENS - Navigation, red		1
9A	751-201	. LENS - Navigation, green		1
10	751-381	. BULB		1
11	761-256	. LAMP - Navigation light assy, 14 volt	3246001 thru 3246017	1
11A	572-634	. LAMP - Navigation light assy, 28 volt	3246018 and up 3257001 and up	1
12	762-426	. SOCKET ASSY - Navigation light		1
13	761-255	. LENS - Navigation light		1
14	755-096	. GASKET - Navigation light		1
15	762-616	. RETAINER - Lens, light		1
16	63886-000	LIGHT ASSY - Tail (optional)	3246001 thru 3246017	1
-16A	761-323	. LAMP - 14 volt	3246001 thru 3246017	1
17	488-401	. TERMINAL	3246001 thru 3246017	1
18	488-358	. TERMINAL	3246001 thru 3246017	1
19	96602-000	PLACARD - Warning		1
-20	38245-000	FAIRING ASSY - Rudder tip (optional)	3246001 thru 3246153 3257001 thru 3257123	1
-21	65213-006	GROUND ASSY - Wing tip	3246001 and up 3257001 and up	1
-21A	101171-002	. MOUNTING PLATE	3246018 and up 3257001 and up	1
-21B	414-748	. SCREW - (MS24693-S28)	3246018 and up 3257001 and up	1

-Item not illustrated

When ordering, always specify Part Number, Description, and Serial Number of Aircraft

FIGURE ITEM	PART NUMBER	NOMENCLATURE	EFFECT FROM TO	UNITS PER ASSY
78-				
-21C	494-101	. WASHER	3246018 and up 3257001 and up	1
-21D	404-896	. NUT - (MS20365-632)	3246018 and up 3257001 and up	1
-21E	69325-157	. WIRE ASSY	3246018 and up	1
-21F	404-528	. SCREW - (MS21042-06)	3246018 and up 3257001 and up	2
-21G	690-639	. WASHER - (NAS1149FN616P)	3246018 and up 3257001 and up	2
-21H	414-757	. SCREW - (MS24693-S29)	3246018 and up 3257001 and up	6
-22	79653-095	WIRE ASSY - Ground		2
-23	554-955	CLAMP		2
-24	554-324	WING STROBE CABLE ASSY		1
-25	554-325	WING STROBE CABLE ASSY		1
-26	565-374	CONNECTOR		1
-27	419-520	SCREW - (AN531-6-R8)		6
-28	415-521	SCREW - (MS35206-231)	3246154 and up 3257124 and up	1
-29	506-541	NUT - (MS27130-A7K)	3246154 and up 3257124 and up	1
-30	463-389	GROMMET - (Optional)	3246001 thru 3246153 3257001 thru 3257123	1
-31	68807-200	WIRE ASSY - (Optional)	3246001 thru 3246153 3257001 thru 3257123	1
-32	690-660	WASHER - (MS35335-30)(Optional)	3246001 thru 3246153 3257001 thru 3257123	1
-33	419-954	SCREW - Sheet metal	3246001 thru 3246153 3257001 thru 3257123	1

-Item not illustrated

When ordering, always specify Part Number, Description, and Serial Number of Aircraft

THIS PAGE INTENTIONALLY LEFT BLANK

GRIDS 2G4 THRU 2G24
INTENTIONALLY BLANK

SECTION XIII
ELECTRONICS GROUP

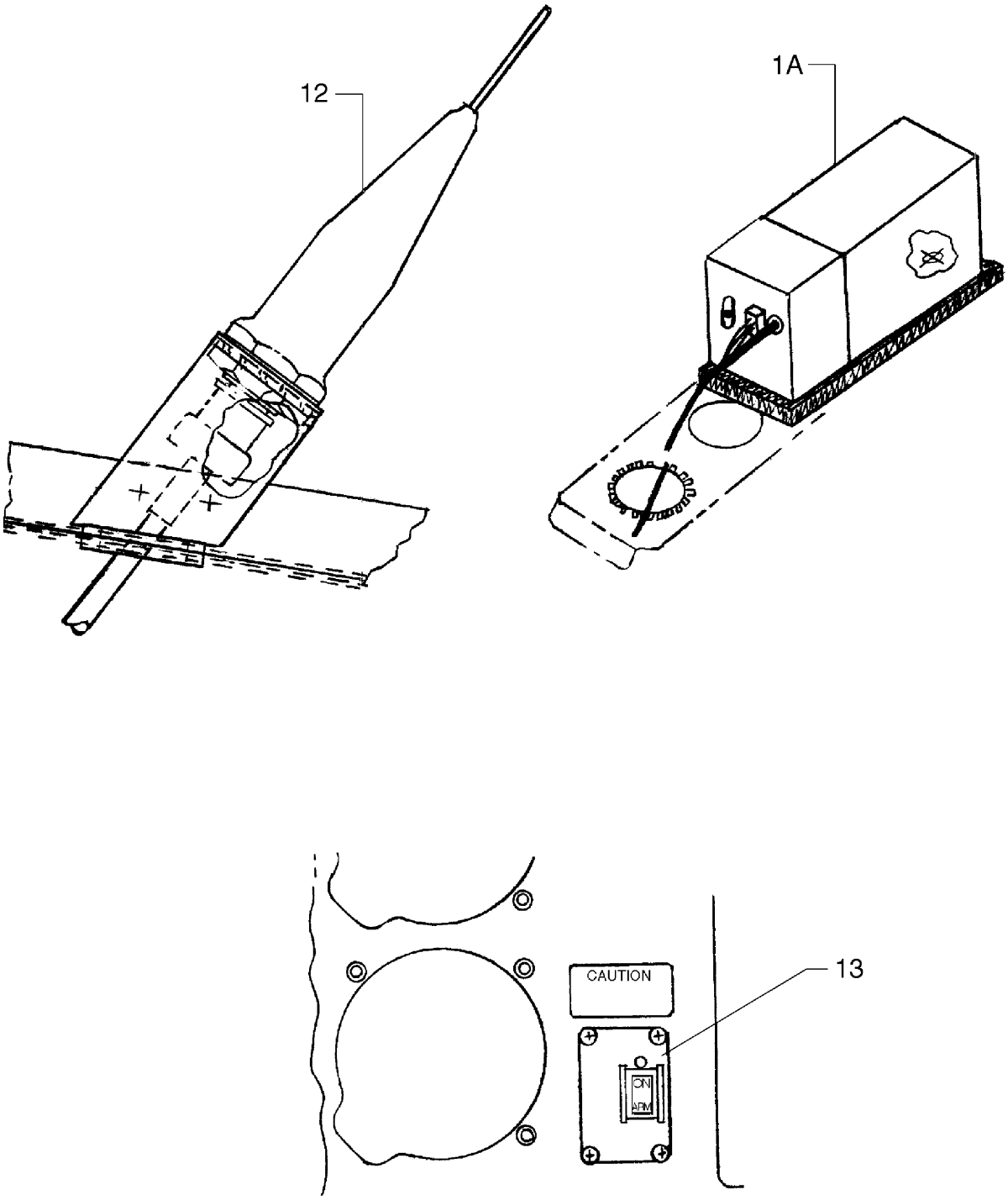

Figure 79. Emergency Locator Transmitter (ELT 110-4) Installation

FIGURE ITEM	PART NUMBER	NOMENCLATURE	EFFECT FROM TO	UNITS PER ASSY
79	06327 (L)	DRAWING - ELT Installation (110-4)		
	06292 (G)	DRAWING - Transmitter Installation - Emergency Locator (NARCO ELT 910)	3246001 thru 3246017	
-1	06292-007	TRANSMITTER - Emergency locator 14 volt DC	3246001 thru 3246017	1
-1	599-515	KIT - Transmitter		1
-1	651-673	KIT - Transmitter (without) (Supplied as part of ELT110-4 kit (without transmitter, for use on aircraft that get ELT provisions only)		1
1A	689-970	TRANSMITTER	3246001 thru 3246017	1
1A	762-128	TRANSMITTER - ELT (includes mounting bracket) (Refer to Piper Service Bulletin #1020-latest revision)		1
-1B	758-696	. BATTERY PACK REPLACEMENT (Refer to Piper Service Bulletin #1020-latest revision)	3246001 thru 3246144 3257001 thru 3257039	1
-2	85187-002	PLATE - Adapter (Required only if panel has cut out FOP El910)		1
-2A	515-710	. SCREW		4
-2B	404-909	. NUT - (MS20365-632C)		4
-3	587-690	STRAP - (MS3367-5-9)		2
-4	415-553	SCREW - (MS35206-263)		4
-5	588-731	SPLICE		1
-6	690-609	WASHER - (NAS1149F0332P)		4
-7	554-720	CLAMP		2
-8	189-625	MOULDING		2
-9	06290-009	HARNESS ASSY - 14 VDC	3246001 thru 3246017	1
-9A	06311-008	HARNESS ASSY	3246001 thru 3246017	1
-10	06311-015	HARNESS ASSY	3246018 and up 3257001 and up	1
-11	654-212	UNIKLIP - (LP-7000)		3
12	597-257	ANTENNA - (01652-0101)	3246001 thru 3246017	1
-12A	763-063	ANTENNA - Whip, with inductor		1
13	766-712	REMOTE SWITCH KIT		1
-14	404-902	NUT - (MS20365-632C)	3246001 thru 3246017	1
-15	486-294	SCREW - Black	3246001 thru 3246017	4
-16	603-337	NUT	3246001 thru 3246017	4
-17	407-040	WASHER - Loc split (MS35338-40)	3246001 thru 3246017	4
-18	690-668	WASHER - (NAS1149FN432P)	3246001 thru 3246017	4
-19	35669-105	PLACARD - (See Figure 84)	3246001 thru 3246017	RF

-Item not illustrated

When ordering, always specify Part Number, Description, and Serial Number of Aircraft

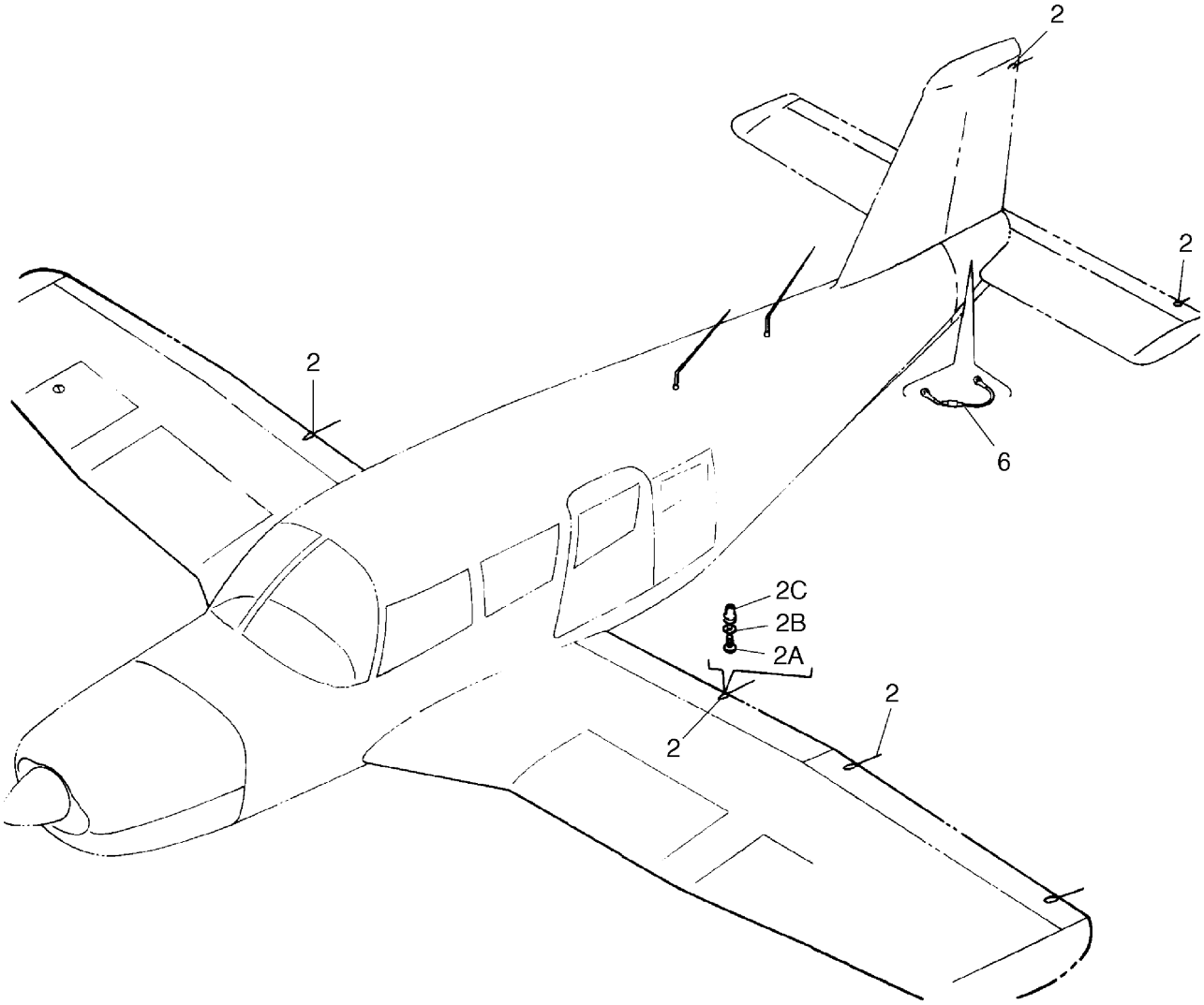

Figure 80. Static Wicks Installation

FIGURE ITEM	PART NUMBER	NOMENCLATURE	EFFECT FROM TO	UNITS PER ASSY
80	78947	DRAWING - Static Wicks Installation		
2	494-678	WICK - Static (SW10-96)		7
2A	415-520	. SCREW - (MS35206-230)		AR
2B	407-041	. WASHER - Lock (MS35338-41)		AR
2C	603-374	. RIVNUT - (MS27103-S7K)		AR
-3	690-639	WASHER - (NAS1149FN616P)		8
-4	690-652	WASHER - (NAS1149DN616H)		8
-5	404-528	NUT - (MS21042-06)		6
6	469-600	JUMPER ASSY - (MS25083-3AA6) Lightning protection		5
-7	415-518	SCREW - (MS35206-228)		2
-8	415-521	SCREW - (MS35206-231)		6

-Item not illustrated

When ordering, always specify Part Number, Description, and Serial Number of Aircraft

THIS PAGE INTENTIONALLY LEFT BLANK

FIGURE ITEM	PART NUMBER	NOMENCLATURE	EFFECT FROM TO	UNITS PER ASSY
		AVIONICS INSTALLATION DRAWINGS		
	79643 (CQ)	DRAWING - Avionics Equipment List (Optional)		
	85495 (AM)	DRAWING - Avionics Equipment Installation (Optional)		

GRIDS 2H8 THRU 2H24
INTENTIONALLY BLANK

SECTION XIV
MISCELLANEOUS GROUP

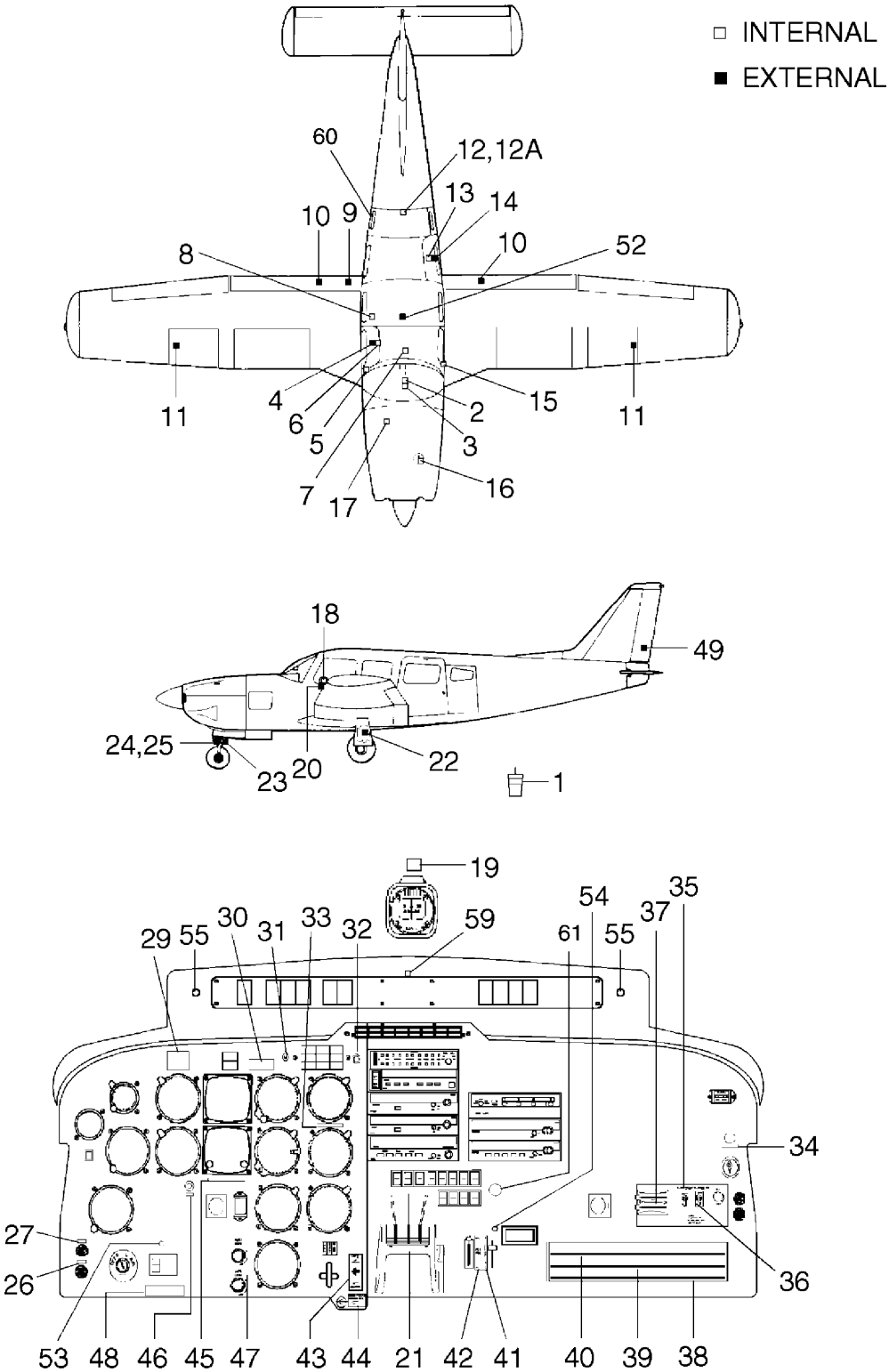

Figure 81. Placards Installation

FIGURE ITEM	PART NUMBER	NOMENCLATURE	EFFECT FROM TO	UNITS PER ASSY
81	85196 (AV)	DRAWING - Placard Installation		
1	62923-000	PLACARD - Fuel check bottle		1
2	35669-162	PLACARD - Fuel selector		1
3	69363-000	PLACARD - Nose L - R		1
4	87334-002	PLACARD - Door release (RH fwd)	3246001 thru 3246017	1
- 4A	63774-000	SILK SCREEN - Door release (RH fwd)	3246001 thru 3246017	1
5	69669-117	PLACARD - Open		1
-5A	69669-118	PLACARD - Latch	3246001 thru 3246017	1
6	36500-002	PLACARD - Engage latch	3246001 thru 3246017	1
7	67786-000	PLACARD - Stabilator trim		1
8	65463-000	PLACARD - Fuel sump drain		1
9	35664-002	PLACARD - Warning - flap step unsafe		1
10	100700-003	DECAL - No Step		2
-10A	100700-002	DECAL - No Step		
11	456-682	PLACARD - Avgas only		2
12	96272-000	PLACARD - Maximum baggage		1
12A	66787-000	PLACARD - Soft wear only		1
13	36501-002	PLACARD - Engage latch		1
14	87335-002	PLACARD - Door release (LH aft)		1
-14A	68190-000	SILK SCREEN - Door release (LH aft)		1
15	69669-199	PLACARD - Airplane operating category	3246001 thru 3246165 3257001 thru 3257143 3257145 thru 3257155	1
15	683-385	PLACARD - Airplane operating category	3246166 and up 3257144 3257156 and up	1
16	87340-002	PLACARD - Oil grade	3246001 and up	1
16	89379-005	PLACARD - Oil grade	3257001 and up	1
-16A	63557-000	SILK SCREEN - Oil grade	3246001 and up	1
17	35669-063	PLACARD - Maximum baggage		1
18	69669-141	PLACARD - Storm window		1
19	87369-027	PLACARD - Compass deviation		1
20	583-582	PLACARD - Level point		2
-20A	656-280	DECAL - Level point		1
21	69669-044	PLACARD - Control quadrant	3246001 thru 3246017	1
22	69669-088	PLACARD - Main gear service		2
23	69669-089	PLACARD - Nose gear service		1
24	35669-005	PLACARD - Nose wheel alignment		1
25	35669-007	PLACARD - Turn limit		1
26	84967-132	PLACARD - Mike		2
27	84967-131	PLACARD - Phone		2
29	84967-124	PLACARD - Demonstrated x-wind	3246001 thru 3246017	1
29	84967-212	PLACARD - Demonstrated crosswinds	3246018 and up 3257001 and up	1
30	19099-000	PLATE		1
31	683-291	PLACARD - Day/Night (84967-130)		1
32	683-294	PLACARD - Press to test (84967-133)		1
33	84967-144	PLACARD - Do not exceed - manifold pressure	3246001 and up	1
33	656-326	PLACARD - Manifold pressure (84967-229)	3257001 and up	1
34	683-298	PLACARD - KLN 90 Dataloader (84967-137)	3246001 thru 3246087	1
35	84967-138	PLACARD - Climate control center (optional)	3246001 thru 3246017	1
35	84967-189	PLACARD - Air cond (optional)	3246018 and up 3257001 and up	1

-Item not illustrated

When ordering, always specify Part Number, Description, and Serial Number of Aircraft

FIGURE ITEM	PART NUMBER	NOMENCLATURE	EFFECT FROM TO	UNITS PER ASSY
81-				
36	84967-143	PLACARD - Fan - hi/low/off	3246001 thru 3246017	1
36	84967-190	PLACARD - Air cond (optional)	3246018 and up 3257001 and up	1
37	84967-139	PLACARD - Heat-def, on/off		1
38	84967-125	PLACARD - Circuit breaker panel	3246001 thru 3246017	1
38	84967-183	PLACARD - Circuit breaker panel	3246018 thru 3246059	1
38	84967-219	PLACARD - Circuit breaker panel	3246060 thru 3246087	1
38	656-343	DECAL - Panel circuit breaker (100835-009)	3246088 thru 3246165 3257001 thru 3257143 3257145 thru 3257155	1
38	656-366	DECAL - Panel circuit breaker (100835-010)	3246166 and up 3257144 3257156 and up	1
39	84967-126	PLACARD - Circuit breaker panel	3246001 thru 3246017	1
39	84967-182	PLACARD - Circuit breaker panel	3246018 thru 3246087	1
39	100835-002	DECAL - Circuit breaker	3246088 and up 3257001 and up	
40	84967-127	PLACARD - Circuit breaker panel	3246001 thru 3246017	1
40	84967-184	PLACARD - Circuit breaker panel	3246018 thru 3246087	1
40	656-265	DECAL - Panel, circuit breaker (100835-003)	3257001 and up	1
40	656-264	DECAL - Panel, circuit breaker (100835-005)	3246088 and up	1
41	84967-129	PLACARD - Flap lever		1
42	84967-142	PLACARD - Alt air, open close		1
43	84967-123	PLACARD - Gear up/down speeds	3246001 thru 3246017	1
43	84967-211	PLACARD - Gear up/down speeds	3246018 and up 3257001 and up	1
44	84967-140	PLACARD - Emergency gear extension		1
45	84967-134	PLACARD - GPS limited to VFR use only		1
46	84967-135	PLACARD - GPS	3246001 thru 3246017	1
47	84967-128	PLACARD - Switch lights, panel lights	3246001 thru 3246017	1
48	84967-136	PLACARD - Alternate static source		1
49	583-581	PLACARD - Do not push (87341-002)		2
-49A	656-279	DECAL - Do not push (100700-025)		2
52	69669-206	PLACARD - Cabin air	3246018 and up 3257001 and up	1
53	656-108	PLACARD - Switch light (84967-101)	3246018 and up 3257001 and up	1
54	84967-145	PLACARD - Amp alter	3246001 thru 3246087	1
55	656-257	PLACARD - Dome light (84967-214)	3246088 thru 3246125 3257001 thru 3257075	2
55	656-348	DECAL - Dome light (100700-033)	3246126 and up 3257076 and up	1
59	656-273	DECAL - No smoking (instrument panel)	3246088 thru 3246125 3257001 thru 3257075	1
59	656-347	DECAL - No smoking (instrument panel)	3246126 and up 3257076 and up	1
60	656-245	DECAL - External power (100700-012)	3246088 and up	1
60	683-315	DECAL - External power (69669-205)	3257001 and up	1
61	656-365	PLACARD - Stormscope clear (optional) (84967-268)	3246166 and up 3257144 3257156 and up	1

-Item not illustrated

When ordering, always specify Part Number, Description, and Serial Number of Aircraft

FIGURE ITEM	PART NUMBER	NOMENCLATURE	EFFECT FROM TO	UNITS PER ASSY
		PIPER SERVICE AND OPTIONAL KITS		
	652-363	SEAL REPLACEMENT KIT		
	760-296	PITOT COVER		
	764-785	PUMP COVER - Baggage floor		
	766-222	FIRE RESISTANT FIBERGLASS REPAIR		
	766-284	AIR CONDITIONING SYSTEM KIT	3246001 thru 3246017	
	766-292	INDICATOR INSTALLATION - Pitot Heat Inoperative	3246001 thru 3246017	
	766-614	KLN 90B OBS RESOLVER WIRING KIT (Reference Piper Service Bulletin #993 - Latest Revision)	3246001 thru 3246016	
	766-639	CLIP INSTL- FLAP SELECTOR CABLE ASSY	3246001 thru 3246069	
	766-653	OIL COOLER WINTERIZATION KIT (Reference Piper Service Bulletin #1018 - Latest Revision)	3257001 thru 3257102	
	766-668	MODIFICATION-ENGINE SUMP DRAIN AND INDUCTION DRAIN KIT (Reference Piper Service Bulletin #1030 - Latest Revision)	3257001 thru 3257087	
	766-684	BAFFLE CLIP INSTALLATION KIT (Reference Piper Service Bulletin #1049 - Latest Revision)	3246001 thru 3246183 3257001 thru 3257205	
	767-318	S-TEC 55X AUTOPILOT STEERING INFO KIT (Reference Piper Service Bulletin #1083 - Latest Revision)	3246181 thru 3246197 3257098 thru 3257248	
	767-332	OIL COOLER KIT (Reference Piper Service Letter #1043 - Latest Revision)	3257001 thru 3257272	
	767-333	CABIN HEATER IMPROVEMENT KIT	3257001 and up	

When ordering, always specify Part Number, Description, and Serial Number of Aircraft

GRIDS 2I6 THRU 2I24
INTENTIONALLY BLANK

NUMERICAL INDEX

Part Number	Figure and Index No.
02054-003	69-41
02570-002	23-44
02585-004	38-39
02585-005	38-39
02585-006	38-39A
02867-002	11-14A
02869-002	11-14B
06290-009	79-9
06292-007	79-1
06311-008	79-9A
06311-015	79-10
14627-003	15-4
14635-002	15-6
14843-016	26-17
14843-090	15-15
14976-011	24-19
14976-015	23-63A
14976-016	23-63B
18219-000	51-90
18219-002	51-47
18321-000	69-43
19063-002	15-31
19099-000	81-30
19336-000	38-12
19336-000	39-5
19336-001	38-12A
19336-001	39-5A
19365-002	38-14
19365-002	39-7
19392-015	39-6
20735-005	24-11
20754-002	27-2
20784-000	27-19
20787-000	27-19E
21156-000	64-55
21172-002	15-9A
21176-000	15-22
21176-000	16-5
21478-000	15-19
21710-000	24-30
21712-002	24-17
21822-000	26-62
21831-004	24-32
21843-000	15-17
21844-000	15-18
22105-003	64-15
22482-000	13-20
23969-002	70-20
23969-002	75-12
23969-003	70-16
23969-005	75-21
23969-005	76-7
24047-000	51-6
24048-000	51-7
24754-005	46A-13C
24787-004	47-6
24787-005	47-7
24788-000	47-8

Part Number	Figure and Index No.
24791-000	47-11
24793-002	47-12
24793-004	47-13
24820-000	47-15B
24862-026	47-16
26345-008	47-1
35166-000	3-26
35166-001	3-26A
35168-012	4-4
35168-013	4-4A
35174-000	4-10
35174-001	4-10A
35207-000	70-12
35214-000	69-40
35214-002	69-40
35270-000	23-34
35282-004	23-37
35283-000	23-35
35284-002	23-36
35284-003	23-33
35337-002	4-52
35401-001	4-61A
35402-000	56-24F
35402-004	56-24G
35404-000	4-61
35425-000	4-39
35507-002	45-36
35507-002	45A-48
35630-016	2-21
35640-008	5-8
35640-009	5-8A
35640-010	5-9
35640-011	5-9A
35662-002	23-40
35664-002	2-50
35664-002	81-9
35669-005	24-46
35669-005	81-24
35669-007	24-53
35669-007	81-25
35669-063	81-17
35669-105	79-19
35669-162	81-2
35669-165	42-27
35672-002	69-69A
35696-002	45-35
35696-002	45A-45
35725-002	2-11
35733-004	3-24
35733-005	3-24A
35777-007	69-17
35777-008	69-16
35797-005	23-2
35801-018	46-81
36500-002	81-6
36501-002	81-13
36558-002	64-31
36558-009	64-31A

Part Number	Figure and Index No.
36572-003	14-32
36572-003	15-52A
36590-002	14-36
36598-002	14-31
36612-002	65-3
36615-005	65-1
36615-005	65-23
36616-003	65-2
36712-002	19-17
36718-002	4-26
36718-003	4-26A
36722-004	14-56
36722-008	15-69
36722-009	15-70
36722-011	17-39
36739-022	2-8
36739-023	2-8A
36739-028	2-9
36739-029	2-9A
36742-013	69-34
36742-014	69-33
36742-015	69-35
36742-016	69-36
36742-017	69-37
36742-020	69-12
36742-021	69-12
36742-022	69-12
36748-002	69-47
36748-003	69-47A
36772-002	69-39
36772-003	69-39
36773-002	69-38
36773-003	69-36A
36806-006	2-63
36806-006	2-63A
36806-007	2-63B
36806-007	2-63C
36950-002	68A-115
36951-002	68A-120
36956-007	68A-125
36960-006	68A-110
36960-007	68A-105
36960-008	68A-100
36960-009	68A-95
36960-026	68A-85
36964-008	42C-12
36964-008	68A-1
37280-005	5-5
37281-002	5-19
37304-004	4-60
37304-005	4-60A
37343-078	45-43
37343-078	45A-64
37343-079	45-13
37343-079	45A-53
37343-080	45-44
37343-080	45A-56
37343-081	45-41

Part Number	Figure and Index No.
37343-081	45A-54
37343-082	45-14
37343-082	45A-65
37365-004	73-45
37365-004	73A-57
37487-000	4-68
37511-026	17-33
37722-002	30-4
37722-003	30-7
37732-000	27-13
37745-002	54-8
37794-002	53-24
37796-002	40-3
37797-002	40-6
37829-007	41-17
37829-010	41-17
37833-005	51-42
37833-008	51-91
37834-002	41-11
37835-002	41-12
37839-002	41-13
37850-002	41-7
37871-009	37-4
37871-009	69-29
37873-003	69-28
37939-002	69-27
37939-003	7-39
37970-002	23-39
37994-002	45-31
37994-003	45A-41
37996-002	16-3
37997-002	65-6
37997-002	67-5
38001-001	12-1
38001-011	7-1
38001-011	7-5
38001-011	7-12
38001-011	7-20
38001-011	7-23
38001-011	7-28
38001-011	8-1
38001-011	9-1
38001-011	10-1
38001-810	7-30A
38019-003	46-10
38019-014	46-9
38023-000	11-59A
38023-002	11-59
38023-003	11-60
38023-008	11-60A
38024-000	64-64
38024-001	64-64A
38025-000	64-65
38025-001	64-65A
38034-000	8-10
38035-002	8-6
38035-003	8-3
38035-004	8-3A

NUMERICAL INDEX

Part Number	Figure and Index No.
38035-006	8-6L
38035-017	8-2
38035-020	8-2
38035-022	8-2
38036-003	8-6C
38036-005	8-6R
38036-007	8-6U
38037-000	8-9
38037-004	8-8
38037-005	8-7
38037-006	8-7A
38040-002	23-10
38041-000	11-14
38041-002	23-28
38044-000	8-17
38046-000	7-10
38046-002	7-42
38047-003	11-64
38047-005	11-65
38062-004	75-6
38062-010	75-3
38062-019	75-2A
38062-020	75-2
38065-000	23-38
38068-002	23-26
38070-001	30-12A
38070-004	30-13
38070-005	30-14A
38070-006	30-12
38071-000	30-19
38071-001	30-19A
38071-008	30-26A
38074-000	30-18
38075-000	30-14
38076-000	30-16
38076-001	30-16A
38076-004	30-17
38076-005	30-17A
38076-008	30-16
38076-009	30-16A
38078-000	23-23
38080-009	46-14
38080-012	46-18
38080-015	46-16
38080-017	46-20
38080-022	46-13
38080-024	46-15
38082-000	30-22
38084-003	51-41
38090-002	51-54
38090-003	51-55
38090-004	51-31A
38091-000	51-1
38094-002	74-3
38108-000	30-20
38109-000	30-21
38118-003	3-7
38118-005	2-12
38118-006	3-6
38136-000	11-15
38136-001	11-15A
38136-008	11-16
38136-009	11-16A
38143-003	76-11
38143-004	76-9
38145-000	8-6A
38145-000	64-59
38145-006	8-6M
38145-006	64-60
38147-000	64-61
38147-001	64-61A
38148-000	64-62
38149-004	69-42
38149-010	69-42
38151-000	23-6
38154-000	53-4
38166-000	46-23
38170-000	49-9D
38174-004	23-27
38192-000	19-4
38200-000	51-10
38202-000	51-11
38204-000	8-6D
38204-000	64-58
38204-003	64-71
38210-000	4-8
38210-001	4-8A
38211-000	3-14
38211-001	3-14A
38222-003	19-18
38227-003	7-26
38228-000	7-24
38229-000	7-9
38230-004	54-5
38232-004	23-16
38234-000	23-18
38245-000	78-20
38252-002	23-74
38252-002	69-26
38255-002	70-11
38433-002	61-1B
38483-002	3-25
38483-003	3-25A
38484-004	3-29
38484-005	3-29A
38486-002	11-40
38487-002	11-36
38488-008	2-5
38488-008	54-1
38488-009	2-5A
38488-009	54-1A
38493-002	4-2
38493-003	4-2A
38496-002	3-23
38496-002	3-23A
38496-003	3-23B
38496-003	3-23C
38496-009	3-23D
38496-009	3-23E
38496-010	3-23F
38496-010	3-23G
38497-002	3-5
38497-003	3-5A
38498-008	3-23H
38498-008	3-23J
38499-002	4-3
38499-003	4-3A
38500-014	2-1
38500-014	2-2
38500-014	2-3
38500-014	2-4
38500-014	3-1
38500-014	3-21
38500-014	4-1
38500-015	2-1A
38500-015	2-2A
38500-015	2-3A
38500-015	2-4A
38500-015	3-1A
38500-015	3-21A
38500-015	4-1A
38502-002	3-34
38502-003	3-34A
38517-002	54-3
38517-003	54-4
38520-002	3-4
38520-003	3-4A
38523-003	3-22A
38523-004	3-22
38526-002	3-33
38526-003	3-33A
38528-004	3-31
38528-005	3-31A
38528-006	3-30
38529-006	4-28
38529-007	4-28A
38549-002	3-3
38549-003	3-3A
38552-002	53-40
38565-002	2-27
38568-002	3-11
38568-003	3-11A
38570-002	11-69
38571-002	3-32
38572-002	2-13
38574-003	4-5
38581-006	4-66
38581-007	4-66A
38581-010	4-65
38581-011	4-65A
38586-010	4-24
38586-011	4-24A
38592-006	54-15
38596-005	54-24
38596-005	54-25
38619-004	54-26
38644-002	5-10
38644-003	5-10A
38645-002	5-15
38645-003	5-15A
38646-002	5-7
38646-003	5-7A
38647-002	5-2
38647-003	5-2A
38648-004	5-4
38648-005	5-4A
38649-002	4-27
38649-003	4-27A
38650-004	2-6
38650-004	5-1
38650-005	2-6A
38650-005	5-1A
38652-002	4-64
38652-003	4-64A
38653-002	4-62
38653-003	4-62A
38656-002	4-63
38656-003	4-63A
38660-002	5-17
38660-003	5-17A
38661-002	5-6
38661-003	5-6A
38663-002	4-53
38665-002	55-6
38666-002	55-5
38666-003	55-5A
38676-002	2-26
38713-000	19-15A
38729-021	46-1
38729-021	46A-11
38737-002	48-4
38737-007	48-4
38738-005	48-5
38738-008	48-5
38739-002	48-6
38739-005	48-6
38739-012	48-6
38744-002	8-6N
38905-003	75A-17
38992-005	63-1
38992-008	63-1
38995-002	63-23
38996-003	63-2
38998-005	63-1A
38998-007	63-1A
39515-002	8-52B
39515-003	8-52C
39515-004	8-52
39515-005	8-52A
39530-809	7-21
39573-015	45-61
39573-015	45A-93

NUMERICAL INDEX

Part Number	Figure and Index No.
39573-030	45-63
39573-030	45A-95
39576-002	70-2
39682-002	66-9
39721-000	17-20
39727-002	10-13
39728-003	18-14
39740-004	18-13
39740-005	18-19
39740-013	17-15
39740-014	17-14
39743-003	18-15
39759-047	18-18
39820-002	54-17E
39821-002	54-17D
39822-002	54-17A
39822-003	54-17H
39824-002	54-16A
39824-003	54-16A
39855-005	54-17F
39856-002	54-17G
39870-007	70-17
39870-010	70-17
39887-002	66-31
39888-003	66-32
40559-028	2-58C
41001-010	55-10
41001-010	57-9
41001-010	59-3
44386-003	24-18
49982-027	15-75F
51006-000	42-10
51006-000	42A-18
51006-000	42B-26
51006-000	42C-26
53916-000	71A-15
53916-002	71A-14
53916-003	71A-15
56958-050	46-81
61402-093	23-14
61879-002	46-7
62002-002	19-19
62002-003	19-20
62002-004	19-21
62019-004	61-2A
62033-000	54-2
62044-000	54-10
62061-005	3-15
62085-002	3-8
62085-003	3-8A
62087-004	3-10
62091-002	3-18
62129-003	4-55A
62129-004	4-55
62129-007	4-56A
62129-008	4-56
62226-000	76-1
62227-000	76-2

Part Number	Figure and Index No.
62279-000	75-10
62279-000	75A-13
62279-002	75B-3
62320-003	6-13
62320-006	6-19
62320-007	6-19A
62324-000	6-5
62324-000	6-22
62324-001	6-5A
62324-001	6-22A
62327-000	6-7
62328-000	6-8
62328-000	6-9A
62328-000	6-21A
62328-001	6-8A
62328-001	6-9
62328-001	6-21
62328-003	6-20A
62328-004	6-20
62330-000	6-11
62330-001	6-11A
62331-000	6-12
62331-001	6-12A
62332-000	6-10A
62332-002	6-10
62336-000	6-17
62336-001	6-17A
62413-000	13-22
62413-001	13-22A
62414-000	13-21
62414-001	13-21A
62421-000	11-33
62421-001	11-33A
62443-000	13-24
62444-005	13-7
62445-000	13-11
62451-000	13-30
62453-000	13-8
62455-000	13-31
62471-000	13-12
62479-002	9-6
62506-000	8-28B
62506-000	9-59
62506-003	9-64
62506-004	9-65
62514-000	8-24
62516-000	9-7
62542-000	8-40
62542-001	8-40A
62543-000	11-4
62543-002	11-4A
62545-003	11-43A
62554-000	12-14
62554-000	12-16
62557-004	11-72
62557-004	38-32
62558-000	11-6A
62558-001	11-8A

Part Number	Figure and Index No.
62566-000	12-21
62581-000	11-24A
62581-001	11-24
62601-002	11-25B
62601-002	11-49
62602-000	11-25C
62606-000	11-50
62607-000	11-51
62608-000	11-52
62620-000	11-11
62644-000	8-42
62645-004	13-13
62654-000	38-31
62656-000	9-35
62664-000	11-12
62665-002	13-28
62679-000	11-10
62679-001	11-10A
62697-002	9-66
62701-008	59-2
62701-036	55-1
62701-037	57-1A
62701-037	59-1
62701-041	58-2
62701-047	58-1
62701-047	58-1
62701-151	58-1
62701-199	55-2
62701-200	55-3
62701-201	55-4
62701-205	57-2A
62701-207	57-1
62701-208	57-2
62701-216	58-1
62703-034	61-3
62709-000	57-23
62710-002	55-19
62710-003	57-16
62710-003	59-4
62711-002	55-11
62711-003	55-13
62711-003	57-3
62711-003	57-27
62711-004	13-29
62711-004	56-30
62711-004	58-36
62711-005	55-12
62712-003	55-22
62712-004	61-18
62713-002	55-40
62713-003	55-14
62713-004	55-15
62714-002	57-29
62714-002	58-27
62714-004	55-45
62715-002	55-44
62715-002	57-30
62716-007	61-8A

Part Number	Figure and Index No.
62727-000	56-52
62727-001	56-52A
62743-002	55-18
62743-003	59-19
62743-005	57-26
62743-006	55-16
62743-008	59-15
62743-009	59-14
62743-010	57-8
62743-011	57-7
62746-000	55-20
62753-000	13-9
62763-000	11-27
62763-002	56-24H
62764-000	56-43
62764-002	56-44
62778-000	61-15D
62782-000	61-14
62784-000	61-15
62829-005	60-1
62831-000	60-8
62832-000	60-9
62833-005	14-22A
62833-010	23-65B
62833-011	53-54
62833-017	62-13A
62833-018	58-23
62833-021	14-47
62833-023	61-36
62833-036	53-53
62833-037	58-39
62833-039	14-54
62833-043	23-56A
62833-043	23-57A
62833-044	26-6
62833-044	26-11
62833-045	24-23
62833-046	51-20
62833-050	51-17
62833-064	23-58A
62833-078	38-18
62833-082	66-12A
62833-083	66-8B
62833-086	46-19B
62833-087	23-57B
62833-101	15-54A
62833-101	51-88A
62833-101	68-28B
62833-101	68-34B
62833-105	14-22
62833-107	14-44A
62833-107	14-46B
62833-107	15-48A
62833-107	23-56B
62833-109	26-38
62833-112	26-38
62833-124	26-58A
62833-125	67-8A

NUMERICAL INDEX

Part Number	Figure and Index No.
62834-002	61-9
62836-000	60-11
62837-002	60-12
62838-000	60-6
62839-000	61-20
62840-002	61-30
62840-003	61-30A
62845-002	61-19
62856-000	56-51
62856-001	56-51A
62858-005	61-31
62867-002	32-18
62874-006	9-10
62923-000	54-14
62923-000	81-1
63020-002	14-55
63020-002	15-62
63036-004	14-38
63037-000	9-37
63037-000	10-20
63039-000	14-45
63039-000	15-29
63039-004	51-12
63042-003	14-37
63045-000	14-35
63045-000	15-45
63078-006	13-50
63078-017	4-71
63142-028	17-28
63142-029	17-29
63142-030	17-30
63149-022	18-17
63149-023	18-17A
63186-002	19-16
63186-003	53-42
63186-009	69-17A
63186-021	19-7
63186-038	69-58E
63186-039	69-58C
63207-000	45-7
63207-000	45A-63
63257-000	17-31
63293-002	17-24
63324-004	31-1
63354-001	31-26B
63356-000	31-34
63357-000	31-35
63392-000	20-2
63392-001	20-2A
63393-000	20-3
63393-001	20-3A
63395-000	22-9
63396-002	22-2
63404-000	61-15B
63405-002	61-15A
63409-002	61-13
63419-002	62-3
63420-007	62-2

Part Number	Figure and Index No.
63449-006	61-4B
63451-000	62-14
63455-000	62-12
63456-000	62-9
63457-003	62-5
63458-004	62-4
63459-018	32-30
63459-018	62-1
63464-005	32-10
63468-000	32-11
63469-000	32-12
63469-001	32-13
63470-000	32-14
63470-001	32-12A
63473-006	32-6
63478-000	32-16
63481-002	32-24
63481-003	32-24A
63481-005	32-24C
63481-009	32-24B
63484-000	27-39
63485-000	32-17
63485-001	32-17B
63485-002	32-17A
63485-003	32-17C
63500-002	21-10
63500-007	21-3
63501-003	21-5
63502-000	21-6
63506-000	21-9
63509-000	21-12
63510-000	21-14
63513-000	21-2
63515-000	21-13
63530-000	58-25
63543-000	22-5
63544-000	22-4
63545-000	22-3
63546-000	22-6
63547-000	22-6A
63550-000	22-10
63557-000	81-16A
63560-002	19-10
63560-002	20-23
63560-003	20-24
63560-005	20-22
63561-005	20-12
63562-000	20-13
63563-000	20-20
63564-000	20-21
63566-002	20-17
63566-002	20-18
63566-003	20-17A
63566-003	20-18A
63567-000	20-19
63568-000	20-27
63569-000	20-14
63570-000	20-15

Part Number	Figure and Index No.
63571-000	20-16
63572-000	20-9
63573-000	20-4
63573-001	20-4A
63575-000	20-5
63575-002	20-5A
63584-000	19-8
63584-016	19-8
63585-003	19-9
63585-004	19-9A
63586-000	19-11
63586-001	19-11A
63587-002	19-12
63587-003	19-12A
63588-000	19-13
63633-006	47-17
63633-006	64-8
63633-019	64-49
63633-030	64-4
63633-033	47-19
63633-033	64-9
63633-066	64-6
63633-100	67-31
63633-148	65-10
63633-156	64A-14
63633-204	64-7
63633-205	47-18
63633-205	64A-13
63633-211	64A-16
63633-212	64-5
63744-008	16-15
63744-009	18-4
63744-010	17-38
63744-011	30-3
63774-000	81-4A
63862-028	75-29
63882-009	58-9
63886-000	78-16
63897-006	65-24
63900-007	41-27B
63900-011	27-45
63900-019	2-15
63900-020	2-16
63900-025	15-64
63900-031	16-9
63900-031	55-39A
63900-031	57-15
63900-031	59-9
63900-038	56-49
63900-039	56-50
63900-046	9-67
63900-046	9-72
63900-047	9-67A
63900-050	14-39
63900-050	15-46
63900-051	61-4A
63900-055	58-30
63900-056	58-31

Part Number	Figure and Index No.
63900-057	58-55C
63900-058	58-55D
63900-061	58-34
63900-062	58-55A
63900-064	61-34
63900-081	17-12
63900-082	17-13
63900-085	26-63
63900-089	26-16
63900-090	17-13A
63900-103	27-40
63900-109	24-20
63900-115	27-52
63900-122	24-22
63900-127	66-24C
63900-130	26-14
63900-131	31-38
63900-136	64-67A
63900-145	38-33
63900-145	38-35
63900-145	39-15
63900-145	43-12
63900-145	43A-24
63900-146	41-12E
63900-146	41-27B
63900-147	30-29
63900-147	39-16
63900-149	41-8
63900-168	30-27A
63900-172	56-32B
63901-009	31-32A
63901-009	32-2
63901-009	63-3
63901-009	63-5
63901-017	27-42
63901-021	63-4
63901-027	46-58
63901-028	32-1
63901-028	63-4
63901-029	32-3
63901-030	31-32
63901-030	32-4
63901-030	63-3
63901-030	63-5
63901-031	63-6
63901-052	46-58
63901-059	31-32A
63901-065	31-32
63901-098	46-37
63901-099	46-63
63901-100	46-40
63901-171	46A-33
63901-174	46-58
63901-174	46A-25
63901-179	46A-20
63901-181	68A-130
63901-197	46A-21
63904-022	53-7

NUMERICAL INDEX

Part Number	Figure and Index No.
63904-024	2-46
63904-029	43-6
63904-030	53-6
63904-064	75-7
63904-068	66-17
63904-082	63-50A
63904-087	75-8
63904-092	66-16
63904-112	65-27
63904-114	53-63A
63904-119	75-4
63909-000	11-26
63913-026	46-28A
63913-026	52-4
63913-026	52-4
63913-034	45-3
63913-037	45-4
63913-047	43A-13
63913-055	43A-18
63913-064	43-7
63913-064	43A-7
63913-076	14-42
63913-092	53-38
63913-093	53-37
63913-106	45-26
63913-106	45-68
63913-106	45A-6
63913-106	45A-61
63913-106	45A-86
63913-132	31-22
63913-133	46-61
63913-140	53-36
63913-163	45-49
63913-188	53-39
63913-199	67-32
63913-211	43-16
63913-211	43-18
63913-211	43A-40
63913-211	43A-42
63913-214	43A-20
63913-223	43A-22
63913-228	43A-4
63913-231	43A-20
63914-007	31-37
63915-006	31-23
63927-000	61-33
63942-000	2-43
63942-001	2-43A
63944-000	51-43
63955-002	58-10
63976-017	31-46
63976-018	31-47
63976-022	74-16
63976-023	53-52
63976-050	74-17
63976-051	74-18
63976-060	3-12B
63976-070	11-23B

Part Number	Figure and Index No.
65003-003	62-11
65003-006	58-35
65003-015	23-42
65003-021	63-27
65003-029	55-41
65003-030	23-24
65003-030	63-25
65003-041	26-41
65003-044	26-20
65003-045	23-47
65003-047	55-17
65003-056	68-7
65050-000	62-10
65061-000	49-9E
65061-002	49-2B
65061-002	49-3B
65071-000	11-28
65072-000	7-27
65103-003	48-10
65114-000	13-32
65119-000	12-4
65119-001	12-4A
65126-000	11-56
65126-001	11-57
65165-087	68-27
65165-091	45-70
65165-091	45A-88
65213-006	78-21
65246-000	58-12
65248-003	58-17
65249-002	58-13
65250-002	58-6
65252-000	58-14
65253-002	58-15A
65254-000	58-42
65258-005	58-52A
65258-007	58-21
65258-008	58-15
65258-009	58-26
65291-003	49-6C
65318-000	64-3
65341-000	22-8
65342-002	19-3
65342-002	22-1
65400-002	53-8
65407-007	53-2
65440-007	16-8
65461-019	53-5
65463-000	81-8
65494-000	13-49
65556-000	12-28
65586-005	6-14A
65586-008	6-14
65587-000	6-15
65588-000	6-3
65589-000	6-4
65590-001	2-7A
65590-001	6-1A

Part Number	Figure and Index No.
65591-000	2-7
65591-000	6-1
65592-000	6-2
65592-001	6-2A
65593-001	6-16
65594-001	6-15A
65595-001	6-18
65653-019	75A-4A
65656-000	11-46
65656-001	11-46A
65657-002	11-45
65692-003	8-43
65692-004	17-37
65727-000	14-53
65727-000	15-71
65742-000	18-6
65782-000	18-7
65866-003	34-28
65896-002	18-5
65898-000	4-29
65898-000	4-29A
65898-001	4-29D
65898-001	4-29E
65898-004	4-31
65898-004	4-31A
65898-007	4-31B
65898-007	4-31C
65898-016	4-29B
65898-016	4-29C
65898-017	4-29F
65898-017	4-29G
65899-000	6-6
66529-000	2-17
66530-000	60-7
66546-000	61-29
66580-002	75-13
66598-000	4-9
66598-001	4-9A
66615-004	34-9A
66620-000	3-17
66621-000	3-16
66623-000	3-12
66623-001	3-12A
66641-000	15-16
66761-002	3-13
66761-003	3-13A
66762-000	4-11
66769-000	13-17
66774-000	51-18
66787-000	34-27
66787-000	81-12A
66789-000	51-56
66789-000	64-13
66794-000	8-28
66814-002	54-17
66815-000	54-17B
66820-000	27-17
66820-002	27-17

Part Number	Figure and Index No.
66822-009	19-35
66822-010	19-36
66853-000	56-26
66853-000	63-46
66855-004	51-37
66965-000	12-3
66972-000	21-8
66975-006	19-2
66975-006	21-1
66975-007	21-19
66979-000	51-3
67012-002	27-7
67023-000	27-9
67023-001	27-9A
67025-009	26-12
67025-010	26-12A
67025-011	26-15
67026-007	24-3
67026-007	24-27
67026-007	24-33
67026-007	27-11
67026-007	27-20
67026-011	24-28
67026-012	26-40
67026-017	27-12
67028-000	26-23
67028-003	26-23A
67028-004	26-23B
67031-002	26-22
67031-003	26-22A
67036-000	27-18
67037-006	27-16
67038-000	27-20A
67040-014	26-2
67040-015	26-2A
67042-013	26-7
67050-002	24-2
67054-008	24-24
67065-000	4-67
67071-000	4-45
67071-000	26-48
67071-001	4-45A
67071-001	26-48A
67079-000	4-38
67079-001	4-38A
67081-000	4-60B
67090-010	26-65
67090-010	30-1
67090-011	26-66
67090-011	30-1A
67091-000	30-30
67093-004	30-2
67093-005	30-2A
67095-000	4-25
67095-001	4-25A
67097-002	4-44
67097-003	4-44A
67100-014	23-1

NUMERICAL INDEX

Part Number	Figure and Index No.
67100-014	24-1
67100-015	23-1
67100-015	24-1
67103-000	4-50
67103-001	4-50A
67106-000	24-50
67107-000	24-29
67114-000	23-50
67135-003	31-36
67136-004	31-25
67137-003	31-26
67138-005	31-26A
67139-000	31-27
67148-000	24-31
67155-000	23-8
67164-000	2-18
67164-001	2-18A
67168-000	23-20
67168-000	23-41
67169-000	23-21
67183-000	27-16A
67189-000	23-22
67192-000	23-52
67193-005	61-28
67198-000	26-46
67202-000	26-61
67203-000	26-64
67214-000	51-5
67215-003	51-9
67216-000	51-9A
67218-000	51-13
67218-002	51-14
67223-004	51-2
67244-000	23-32
67245-000	24-35
67249-000	13-25
67277-000	27-44
67321-000	61-1C
67367-003	13-51
67404-002	69-31
67404-003	69-32
67436-004	70-3
67436-006	70-4
67439-002	70-10
67462-006	42-22
67487-002	70-15
67487-003	69-48
67487-003	75B-12
67487-005	75-30
67487-005	75B-9
67502-000	26-60
67600-000	63-35
67670-000	4-42
67670-001	4-42A
67672-014	4-22
67672-015	4-22A
67673-000	4-23
67676-002	4-54

Part Number	Figure and Index No.
67676-003	4-54A
67677-000	4-49
67677-001	4-49A
67678-000	4-48
67678-001	4-48A
67687-000	4-59
67687-001	4-59A
67689-002	4-43
67689-003	4-43A
67694-000	4-41
67700-006	63-21
67700-007	63-7
67700-066	45-16
67700-082	46-56
67700-096	53-30
67700-100	53-28
67700-107	63-9
67700-108	63-10
67700-118	63-18
67700-119	63-19
67700-124	63-20
67700-150	45A-68
67700-172	45-18
67700-172	45A-68
67700-177	53-22
67700-186	45-17
67700-312	53-32
67700-314	53-33
67700-315	53-34
67700-316	45-30
67700-316	45A-11
67700-317	45-19
67700-323	31-2
67700-324	31-31
67700-325	31-31A
67700-329	63-12
67700-330	63-13
67700-337	53-35
67700-346	45-29
67700-347	45-21
67700-350	45-15
67700-363	53-31
67700-368	53-26
67700-369	53-63
67700-375	52-6
67700-401	53-29
67700-402	53-27
67700-404	63-49
67700-405	63-48
67700-406	63-11
67700-407	63-8
67700-408	63-15
67700-409	63-14
67700-416	63-16
67700-416	63-17
67700-420	52-5
67700-421	52-7
67700-425	45A-40

Part Number	Figure and Index No.
67700-426	45A-8
67700-427	53-27
67700-428	53-63
67700-429	46-82
67700-429	46A-35
67700-430	46-56
67700-430	46A-27
67700-431	63-21
67700-432	63-20
67700-433	63-7
67723-000	2-31
67723-001	2-31A
67728-000	54-18
67742-000	9-57
67753-000	27-14
67755-000	24-16
67755-000	27-4
67786-000	81-7
67797-006	26-19
67797-007	26-19A
67909-000	24-15
67926-040	27-10
67926-041	27-10A
68005-000	46-82
68014-000	7-43
68022-014	41-14
68028-003	61-8
68043-002	48-5A
68111-000	3-9
68119-000	3-19
68174-000	15-26
68176-003	15-41
68178-003	15-44
68179-005	15-43
68179-006	15-42
68179-007	14-40
68179-008	14-41
68186-002	15-40
68187-000	15-23
68188-002	15-3
68190-000	81-14A
68198-000	76-8
68214-002	8-4
68214-003	8-4A
68215-000	8-5
68217-000	8-6Z
68223-000	9-69
68225-000	9-71
68250-004	8-19
68251-004	8-19A
68254-000	8-20
68258-005	8-21
68262-000	8-28C
68264-000	11-54
68266-000	8-12
68267-000	8-11
68268-004	16-1B
68272-002	8-30

Part Number	Figure and Index No.
68272-003	8-31
68272-004	8-34
68273-002	8-32
68275-000	8-14
68275-002	8-14A
68275-002	8-14A
68277-000	8-13
68278-000	8-16
68279-000	8-38
68279-004	8-38A
68280-000	8-18
68280-001	8-18A
68282-000	8-15
68282-001	8-15A
68283-000	8-39
68283-001	8-39A
68286-000	8-45
68290-003	8-35
68290-004	8-37
68290-005	8-36
68293-002	18-23
68293-002	18-39A
68307-000	9-27
68308-000	9-26
68313-000	9-39
68315-000	9-42
68315-001	9-42A
68319-000	9-70
68320-003	9-17
68323-000	9-44
68323-001	9-44A
68324-000	9-45
68325-002	9-18
68326-000	9-21
68327-000	9-20
68328-002	9-47
68330-006	9-48
68331-000	9-19
68331-001	9-19A
68332-000	9-49
68333-000	10-17
68333-001	10-17A
68334-000	9-73
68335-000	10-18
68338-000	9-50
68339-000	9-51
68340-000	9-55
68341-000	9-56
68342-010	9-25
68342-011	9-25A
68343-002	9-56A
68344-000	9-46
68349-000	9-52
68351-000	9-55A
68352-003	9-9
68353-000	10-7
68357-001	10-2A
68359-000	10-3

NUMERICAL INDEX

Part Number	Figure and Index No.
68362-000	9-63
68363-000	9-62
68364-000	10-19
68366-000	10-6
68369-000	10-25
68369-001	10-25A
68370-001	10-9
68371-000	10-10
68371-001	10-10A
68372-000	10-11
68373-000	10-12
68373-001	10-12A
68375-000	10-8
68381-000	9-54
68382-002	9-8
68414-003	58-3
68426-002	19-1
68426-002	20-1
68427-000	20-10
68428-000	20-11
68429-002	20-6
68429-003	20-6A
68430-000	20-7
68430-001	20-7A
68431-000	20-8
68431-001	20-8A
68440-000	37-8
68441-000	37-7A
68450-002	56-24C
68451-003	56-2
68452-004	56-3
68453-000	55-24
68454-000	55-25
68464-000	31-24
68466-000	31-30
68467-000	31-29
68472-000	58-8
68474-000	12-20
68491-000	58-18
68501-007	11-2
68502-000	11-6
68502-001	11-8
68503-000	11-7
68503-001	11-9
68504-000	11-18
68504-001	11-18A
68505-000	11-3
68506-000	11-5
68507-002	11-22
68508-001	11-19
68508-002	11-19A
68509-002	11-32
68509-003	11-32A
68511-000	11-34
68511-001	11-34A
68512-000	11-35
68512-001	11-35A
68525-000	11-13

Part Number	Figure and Index No.
68528-000	11-61
68528-001	11-61B
68531-000	11-58
68533-000	11-29
68533-001	11-29A
68535-006	11-25
68535-007	11-25
68535-008	11-25
68535-009	11-25
68535-010	11-25
68535-011	11-25
68537-000	11-31
68538-000	11-30
68539-000	11-20
68540-000	11-21
68540-001	11-21A
68541-000	11-25A
68542-000	11-17
68543-000	11-48
68547-004	17-26
68557-000	61-9A
68602-000	7-31
68602-001	7-31A
68603-000	12-5
68604-004	12-6
68605-000	12-7
68605-001	12-7A
68606-000	12-8
68606-001	12-8A
68607-003	12-10
68608-000	12-42
68608-001	12-42A
68609-000	12-13
68609-001	12-13A
68612-000	12-15
68613-000	41-22
68613-002	41-22
68613-003	41-22
68615-005	12-19
68617-000	12-22
68618-000	12-23
68619-000	12-24
68619-001	12-24A
68621-002	12-26
68621-003	12-26A
68623-002	12-27
68625-002	12-45
68625-003	12-45A
68629-000	12-39
68632-000	12-30
68632-001	12-30A
68634-000	12-9
68634-001	12-9A
68637-000	12-31
68637-001	12-31A
68638-001	12-32A
68638-002	12-32
68639-000	12-33

Part Number	Figure and Index No.
68640-002	12-34
68640-003	12-34A
68641-000	12-35
68641-001	12-35A
68642-000	12-36
68642-001	12-36A
68643-000	12-37
68643-001	12-37A
68644-000	12-49
68645-000	12-50
68647-000	12-41
68647-001	12-41A
68649-003	12-11
68652-000	12-44
68655-002	12-12
68656-000	12-40
68657-000	12-5A
68677-000	12-18
68678-000	12-38
68699-000	61-35
68699-014	51-16
68739-000	11-25D
68751-003	48-6A
68763-000	53-41
68770-006	51-58
68770-012	51-60
68770-014	64-14
68771-004	69-24
68771-008	51-59
68771-010	51-57
68778-000	46-57
68804-004	69-1
68804-007	69-1
68807-200	78-31
68817-035	4-70
68817-056	22-13
68853-008	16-1C
68853-010	16-1D
68904-000	64-26
68908-000	64-2
68911-000	51-44
68918-000	64-30
68919-000	64-28
68921-000	11-42
68921-000	64-40A
68923-002	64-43
68923-003	64-43A
68923-004	64-44
68923-005	64-44A
68923-006	64-45
68923-007	64-45A
68923-008	64-42
68923-009	64-42A
68923-010	64-42
68923-011	64-42A
68923-012	64-42
68923-013	64-42A
68925-000	64-40C

Part Number	Figure and Index No.
68928-000	64-54
68929-000	64-56
68933-000	64-53
68963-000	17-7
68964-000	17-11
68966-002	10-14
68967-000	10-21
68970-000	10-29
68971-000	13-23
68972-000	12-47
68974-000	10-22
68975-000	12-48
68976-000	17-2
68978-000	17-5
68980-000	17-4
68981-000	17-6
68984-000	10-2
68985-000	10-28
68986-002	10-23
68986-003	10-30
68991-000	13-48
68999-008	17-32
69011-000	51-45
69011-000	51-89
69012-000	51-46
69012-000	51-90
69015-002	46-28
69015-004	46-28
69015-004	46-28B
69015-051	43A-10
69032-000	53-19
69042-000	45-12
69050-004	69-18
69077-000	61-15C
69088-005	53-12
69092-002	53-1
69093-002	53-11
69094-004	53-9
69098-000	64-47
69098-002	64-47A
69105-003	10-5
69105-004	10-4
69106-000	13-27
69107-000	12-29
69112-000	17-3
69181-000	53-13
69219-000	18-46
69220-004	18-44
69220-005	18-44B
69220-018	18-43
69220-019	18-43A
69224-000	15-5
69231-000	46-43
69232-000	46-26
69285-000	64-50
69292-003	58-4
69308-000	51-39
69312-006	31-33

NUMERICAL INDEX

Part Number	Figure and Index No.
69319-000	51-15
69324-005	51-27
69325-123	69-21
69325-124	69-25
69325-129	75-18
69325-129	75A-11
69325-130	75-17
69325-130	75A-12
69325-157	78-21E
69347-003	8-46
69349-000	60-2
69363-000	81-3
69464-000	52-14
69471-002	15-75B
69471-003	15-75C
69475-000	8-47
69481-003	9-38
69481-004	9-38A
69481-005	9-38B
69481-006	9-38C
69483-000	9-40
69483-001	9-40A
69485-000	51-4
69489-000	53-10
69491-000	8-27
69492-000	8-28A
69495-000	16-13
69498-000	58-14A
69556-006	64-63
69624-000	19-15
69636-005	36-9
69669-044	81-21
69669-077	37-10A
69669-088	27-51
69669-088	81-22
69669-089	24-52
69669-089	81-23
69669-115	45-37
69669-115	45A-52
69669-117	14-60
69669-117	81-5
69669-118	14-61
69669-118	81-5A
69669-141	18-20
69669-141	81-18
69669-173	76-3
69669-175	78-2
69669-199	81-15
69669-200	15-78C
69669-204	66-42
69669-206	81-52
69691-000	7-14
69692-000	7-16
69694-000	7-14A
69695-002	7-16A
69696-000	7-37
69697-000	9-4
69698-000	9-3

Part Number	Figure and Index No.
69698-001	9-3A
69709-000	18-22
69709-002	18-56
69712-005	18-3
69713-005	18-2
69735-005	53-14
69736-002	2-49
69738-000	9-29
69739-000	9-2
69740-002	9-30
69742-000	9-28
69748-000	9-58
69748-000	10-15
69776-000	11-63
69776-001	11-63A
69851-000	58-36A
69853-003	16-1F
69853-005	16-1J
69853-006	16-1
69853-007	16-1A
69853-008	16-1E
69853-010	16-1H
69853-011	16-1M
69853-012	16-1N
69853-013	16-1P
69853-014	16-1Q
69854-000	16-1G
69858-004	17-1
69859-004	17-1A
69859-005	17-1B
69874-003	69-10
69881-002	7-40
69881-003	7-41
69887-000	16-1K
69888-000	9-16
69890-979	7-30
69891-004	18-47A
69891-005	18-47E
69891-006	9-5
69891-007	9-5A
69891-008	18-52
69891-009	18-52
69891-022	18-53
69891-023	18-54
69895-006	7-7A
69895-007	7-7
69898-000	7-29
69899-002	7-13
69902-000	7-19
69904-000	7-36
69905-000	7-25
69908-000	7-6
69971-002	10-26
69971-003	10-27
69972-004	15-75D
69973-002	12-51
69973-003	12-51A
70371-002	51-49

Part Number	Figure and Index No.
70371-002	64-33
70371-003	51-48
70371-003	64-32
73508-002	75A-26
73965-005	66-5
73965-010	66-5
73965-017	66-4
74075-002	76-16
74075-003	76-17
75619-005	70-23
75619-005	70-23A
75619-006	70-24A
76175-000	38-7
76176-000	38-15
76176-000	39-8
76176-002	38-38
76221-000	34-7D
76255-000	7-17
76467-004	9-32
76474-903	7-32
76497-002	13-18
77910-021	52-4
78012-000	9-41
78039-000	45A-20
78085-017	15-68
78113-000	45-40
78159-000	4-69
78271-005	18-1
78271-006	18-1B
78309-000	4-72
78309-000	4-72A
78309-001	4-72B
78309-001	4-72C
78475-006	4-7
78475-007	4-7A
78717-002	26-37
78731-016	37-5
79035-000	65-12
79154-000	18-47
79155-000	18-47D
79162-000	9-11
79174-004	2-48
79174-005	2-47
79205-000	70-13
79207-000	38-6
79229-000	38-16
79230-000	38-13
79233-000	9-36C
79234-000	9-15
79235-000	38-17
79264-000	65-9
79267-000	13-33
79268-000	21-15
79272-000	13-10
79277-000	19-40
79277-001	19-40A
79280-000	65-17
79281-000	65-14

Part Number	Figure and Index No.
79282-000	65-15
79284-000	65-19
79285-000	65-20
79286-000	65-13
79287-000	65-18
79290-000	65-26
79293-002	65-30
79303-000	65-11
79399-000	43-2
79399-005	43A-1
79427-002	7-44
79430-000	32-15
79434-000	15-7
79442-000	38-11
79442-000	39-9
79445-000	67-16
79445-002	67-17
79445-004	67-18
79445-005	34-25
79445-005	67-16
79445-008	67-17
79473-000	51-8
79475-007	14-6
79475-008	14-7
79475-009	14-8
79475-034	14-33
79475-048	14-5
79475-057	14-4
79475-092	14-1C
79475-107	14-66
79515-003	14-13
79515-005	14-14
79515-007	14-17
79515-008	14-18
79515-013	14-12
79515-015	14-19
79515-035	14-11
79515-070	14-13A
79515-071	14-14A
79515-072	14-17A
79515-072	14-17B
79530-002	14-20
79532-002	14-23
79540-002	38-3
79540-003	38-3A
79542-018	14-3
79542-019	14-50
79545-005	14-62G
79545-014	14-1
79545-016	14-1A
79545-017	14-66B
79545-018	14-1B
79547-000	7-15
79547-000	9-33
79547-002	9-34A
79547-003	9-34
79553-000	8-22
79553-001	8-22A

NUMERICAL INDEX

Part Number	Figure and Index No.
79555-000	38-24
79555-000	39-11
79555-012	38-24
79555-013	38-24A
79555-014	38-24A
79557-000	18-45
79557-002	18-45A
79557-002	18-45B
79558-002	66-12B
79561-000	9-12
79561-004	9-31
79561-005	9-14
79561-006	9-13
79561-007	9-23
79561-008	9-24
79561-029	9-12A
79561-038	9-12B
79561-038	9-12D
79561-046	9-12C
79561-046	9-12E
79561-903	9-22
79562-000	18-21
79562-002	18-55
79563-006	7-8
79572-000	18-8
79583-002	12-17
79583-003	12-17A
79594-000	15-9
79595-019	75-22
79595-020	69-45
79595-020	75-24
79595-020	75A-18
79600-000	42-23
79600-000	42A-17A
79600-000	42B-20A
79600-000	42C-20A
79633-002	39-4
79633-015	39-4A
79639-002	9-36
79647-002	14-10
79653-095	78-22
79653-216	69-18
79653-242	69-21
79653-249	69-25
79680-002	36-13
79680-003	36-12
79747-000	12-46
79747-001	12-46A
79759-028	39-3B
79800-002	27-3
79837-000	67-20
79837-002	67-19
79837-009	67-20A
79837-011	34-23
79837-013	34-23
79837-013	67-19
79837-014	67-20
79839-003	67-24

Part Number	Figure and Index No.
79840-004	67-29
79849-006	34-22
79849-015	34-22
79863-003	64-1
79869-002	46-38
80122-088	24-41
80122-088	27-28
80122-089	27-37
80122-169	46A-26A
80122-169	46A-34A
81262-068	15-10
82227-003	34-30
82695-014	27-40
82695-014	27-40
82732-095	23-48
82732-099	23-17
82732-099	23-19
82732-102	47-15A
82732-103	47-14B
82940-002	61-1D
82940-003	61-1E
82974-008	61-1N
82980-007	61-1Q
83222-004	19-18A
83302-043	15-11
83357-006	69-13M
83358-003	69-13
83358-005	69-13
83365-002	16-8
83365-002	17-27
83396-004	37-11
83396-005	37-11
83396-008	37-11
83396-009	37-11
83710-002	28-17
83744-172	66-18A
83744-181	45A-73
83744-191	43A-38
83744-191	43A-39
83744-249	45A-79
83744-250	45A-77
83744-256	45A-75
83744-256	45A-77A
83932-007	42-20
83932-007	42A-23
84013-021	44-15
84013-042	45A-3
84013-047	44-5
84013-055	44-17
84013-059	44-22
84013-074	44-21
84013-079	44-9
84013-082	44-11
84013-095	44-13
84013-103	43A-13
84015-075	43A-38
84264-005	37-13A
84266-005	66-19

Part Number	Figure and Index No.
84266-011	66-14
84266-012	66-15
84266-019	66-18
84267-002	68-2
84316-002	75A-2B
84522-003	69-64
84549-004	61-1L
84622-010	71-9
84622-012	71-7
84622-013	71-6
84622-017	70-19B
84622-017	71-10
84622-020	71-13
84622-025	71-5
84622-039	71-12
84622-052	71-8
84622-068	71-4
84622-083	71-11
84622-084	71-2
84622-085	71-3
84967-123	81-43
84967-124	81-29
84967-125	73-50
84967-125	81-38
84967-126	73-51
84967-126	81-39
84967-127	73-52
84967-127	81-40
84967-128	81-47
84967-129	81-41
84967-131	81-27
84967-132	81-26
84967-134	81-45
84967-135	81-46
84967-136	81-48
84967-138	81-35
84967-139	81-37
84967-140	81-44
84967-142	81-42
84967-143	81-36
84967-144	81-33
84967-145	81-54
84967-182	81-39
84967-183	81-38
84967-184	81-40
84967-189	81-35
84967-190	81-36
84967-211	81-43
84967-212	81-29
84967-219	81-38
85012-101	46A-14E
85096-002	56-22
85187-002	79-2
85194-002	17-17
85194-003	17-18
85194-004	17-16
85194-005	17-19
85194-006	18-40

Part Number	Figure and Index No.
85194-007	18-36
85194-008	18-24
85194-009	18-25
85194-009	18-29
85194-010	18-28
85194-010	18-32
85194-011	18-37
85194-012	18-33
85194-013	18-38
85194-014	18-34
85194-015	18-26
85194-015	18-30
85194-016	18-27
85194-017	18-31
85194-018	18-39
85194-019	18-35
85194-020	18-35A
85195-004	6-6A
85195-005	6-5B
85197-003	2-61
85197-004	2-60
85199-003	8-29
85199-004	8-53
85199-006	8-29
85199-009	8-29A
85199-011	8-29
85199-014	8-29A
85199-018	8-29
85202-005	49-7A
85202-006	49-7B
85202-007	49-7C
85202-008	49-7D
85202-010	49-7
85203-005	49-8A
85203-006	49-8B
85203-007	49-8C
85203-008	49-8D
85203-009	49-8
85204-002	48-8
85204-003	48-9
85204-006	48-8A
85204-006	48-9A
85208-002	8-29B
85210-002	35-4
85210-003	35-5
85210-004	35-6
85210-005	35-6A
85210-006	15-78
85210-006	34-5
85210-006	34-10A
85210-007	14-65
85210-008	14-62
85210-012	34-6
85210-012	35-7
85210-019	37-5A
85210-022	36-2
85210-023	36-1
85210-024	36-4

NUMERICAL INDEX

Part Number	Figure and Index No.
85210-025	36-3
85210-026	36-6
85210-027	36-5
85210-028	36-8
85210-029	36-7
85210-030	36-10
85210-031	36-11
85210-040	34-1
85210-054	36-14
85210-056	36-15
85210-059	34-3
85210-060	15-76
85210-060	34-2
85210-066	15-76A
85210-070	15-78B
85210-071	15-75
85210-073	15-75A
85210-075	14-63
85210-076	34-15
85210-079	14-63A
85210-083	34-18
85210-084	34-10
85210-087	17-25
85210-090	14-67
85210-092	37-1
85210-095	34-19
85210-099	17-23
85210-101	14-67A
85210-103	34-9
85210-104	34-8
85210-108	34-14
85210-123	37-2
85210-126	35-5A
85210-155	14-67B
85210-155	14-67B
85210-158	34-21
85210-170	37-11A
85210-174	37-11A
85210-177	37-1
85210-182	37-1
85210-188	34-21
85210-189	37-2
85210-190	34-1
85210-191	34-10
85210-196	14-66A
85210-202	35-4
85210-203	35-5
85210-204	35-6
85210-205	35-6A
85210-206	35-5A
85210-221	34-10
85210-222	34-21
85210-230	34-16
85210-238	34-14
85210-241	14-62
85210-242	34-3
85210-248	37-11A
85210-250	37-11A

Part Number	Figure and Index No.
85210-252	34-10
85210-259	41A-4
85210-269	34-1
85210-278	34-1
85210-296	34-1
85210-298	34-19
85210-299	17-23A
85210-301	34-6
85210-301	35-7
85210-309	34-18
85210-310	34-18
85210-480	34-10
85233-004	47-2
85233-006	47-4
85233-008	47-5
85233-010	47-3
85236-002	49-13
85237-003	49-9
85237-004	49-1
85237-005	49-9A
85237-006	49-1A
85237-009	49-9B
85237-010	49-9C
85237-016	49-9
85237-017	49-9A
85238-010	49-15
85238-013	49-15A
85238-015	49-4A
85238-017	49-4
85238-019	49-14
85238-021	49-14A
85238-022	49-15
85238-025	49-14
85239-002	46-80
85240-002	66-10
85240-008	66-10
85285-002	15-79
85286-002	7-33
85286-003	7-33A
85286-005	7-35
85286-006	7-34
85287-002	2-10
85287-004	2-56
85287-005	2-56A
85287-006	2-57
85289-002	2-45
85289-003	2-45A
85290-002	2-44
85290-003	2-44A
85292-010	61-1
85292-014	61-1A
85292-022	61-1
85292-023	61-1A
85293-003	35-1A
85293-004	35-1
85293-005	35-2A
85293-006	35-2
85293-007	35-3A

Part Number	Figure and Index No.
85293-008	35-3
85294-002	17-22
85294-003	18-12
85294-005	18-11
85294-006	18-9
85294-007	18-10
85296-002	69-13
85297-007	69-13M
85299-002	69-60
85299-003	69-60
85299-005	69-60
85305-002	70-29
85307-002	73-2
85307-004	73A-2
85308-002	73-1
85308-003	73-1
85308-004	73A-1
85308-005	73A-1
85308-006	73A-1
85308-007	73A-1
85310-002	37-3B
85310-003	37-3B
85311-002	37-3
85311-004	37-3
85311-005	37-3
85313-002	28-17
85315-002	70-8
85315-003	70-8
85316-002	72-1
85316-003	72-12
85316-004	72-26
85322-002	47-23
85324-002	69-59
85324-004	69-59
85326-002	49-2E
85326-005	49-10A
85326-006	49-10
85342-002	46-59
85342-002	46A-30
85345-002	74-38
85345-003	74-39
85347-002	24-55
85347-002	69-14
85347-003	24-55A
85347-003	69-14
85362-002	7-11
85362-010	7-11A
85363-003	69-15
85364-002	69-12D
85365-003	15-80
85366-003	34-17B
85366-004	34-17A
85402-006	2-9B
85402-006	2-9C
85402-007	2-9D
85402-007	2-9E
85402-008	69-58D
85402-009	69-58G

Part Number	Figure and Index No.
85402-010	69-58B
85402-011	69-57A
85402-016	69-58A
85402-017	69-57
85402-018	2-8B
85402-018	2-8C
85402-019	2-8D
85402-019	2-8E
85412-002	75A-10
85415-002	75A-6
85430-002	37-17
85456-002	69-10A
85462-003	45A-5
85469-012	18-47C
85469-013	18-47G
85491-004	44-2
85500-680	7-3
85500-682	7-22
85500-684	7-4
85504-011	75A-22
85504-012	75A-4
85504-013	75A-8
85507-002	71A-1
85507-003	71A-1
85507-004	71A-1
85514-004	38-23
85514-005	38-23A
85515-002	34-28
85517-002	7-1A
85517-002	7-5A
85517-002	7-12A
85517-002	7-20A
85517-002	7-23A
85517-002	7-28A
85517-002	8-1A
85517-002	9-1A
85517-002	10-1A
85517-002	12-1A
85517-003	7-1C
85517-003	7-5B
85517-003	7-12B
85517-003	7-20B
85517-003	7-23B
85517-003	7-28B
85517-003	8-1C
85517-003	9-1C
85517-003	10-1C
85517-003	12-1C
85517-004	7-1B
85517-004	7-5C
85517-004	7-12C
85517-004	7-20C
85517-004	7-23C
85517-004	7-28C
85517-004	8-1B
85517-004	9-1B
85517-004	10-1B
85517-004	12-1B

NUMERICAL INDEX

Part Number	Figure and Index No.
85522-002	70-32
85534-002	70-30
85534-003	70-31
85535-012	18-1A
85535-013	18-1C
85565-010	48-2A
85565-016	48-1A
85565-020	48-1
85565-023	48-2
85598-002	48-7
85598-003	48-3
85598-005	48-19
85598-009	48-3A
85598-010	48-3B
85598-012	48-7A
85598-014	48-7B
85643-002	45A-1
86062-094	46A-19C
86238-151	75-14
86392-002	5-16
86392-003	5-16A
86395-002	5-11
86395-003	5-11A
86396-002	5-12
86396-003	5-12A
86397-004	5-13
86397-005	5-13A
86398-002	5-14
86398-003	5-14A
86529-002	4-13
86529-003	4-13A
86530-002	4-14
86530-003	4-14A
86532-004	4-15
86532-005	4-15A
86533-002	4-16
86533-003	4-16A
86534-002	4-17
86534-003	4-17A
86535-002	4-18
86535-003	4-18A
86538-002	4-12
86538-003	4-12A
86540-002	4-51
86540-003	4-51A
86541-002	4-19
86541-003	4-19A
86543-002	4-47
86543-003	4-47A
86544-002	4-37
86544-003	4-37A
86545-002	3-27
86545-003	3-27A
86545-006	3-28
86545-007	3-28A
86555-002	4-33
86555-003	4-33A
86556-002	4-35

Part Number	Figure and Index No.
86556-003	4-35A
86561-002	4-21
86561-003	4-21A
86561-010	4-20
86561-011	4-20A
86562-008	5-3
86562-009	5-3A
86573-004	4-57
86573-005	4-57A
86633-002	4-58
86684-002	46-78
86700-006	56-42F
86700-007	46-32
86700-021	55-21
87240-006	42-19A
87240-006	42A-22B
87260-004	8-54
87261-004	8-54A
87278-002	9-74
87278-002	10-35
87297-002	41-12
87297-003	41-11
87319-002	23-11
87319-003	23-12
87319-004	23-13
87329-007	14-51
87329-009	16-6
87329-011	15-61
87332-002	38-4
87334-002	14-58
87334-002	81-4
87335-002	15-73
87335-002	81-14
87340-002	81-16
87341-002	19-41
87341-004	2-54
87369-027	42A-25
87369-027	42B-32
87369-027	42C-31
87369-027	81-19
87373-007	69-53
87396-002	37-6
87415-003	66-2
87415-006	66-2
87456-004	70-21A
87456-005	70-21A
87458-003	70-21
87458-004	70-21
87458-005	70-21
87458-006	70-21
87499-002	69-11
87499-007	69-11
87502-003	75-26
87502-015	75A-27
87502-016	75A-27B
87502-019	75A-27D
87503-002	69-52
87539-003	56-24E

Part Number	Figure and Index No.
87539-004	56-24D
87539-006	56-18A
87702-005	42A-22A
87702-006	42-19
87702-007	42A-22
87713-025	42-18
87713-025	42A-20
87742-002	69-57
87765-002	56-16
87765-003	56-4
87765-005	56-24
87765-006	56-24A
87765-012	56-6A
87765-013	56-25
87765-014	56-24B
87765-018	56-21
87765-025	56-19
87765-028	56-19A
87765-032	56-5
87765-033	56-6
87765-034	56-7
87765-035	56-10
87765-040	56-11
87765-041	56-23
87765-045	56-20
87765-046	56-18
87780-003	44-30
89023-010	38-23
89023-010	39-10
89023-011	38-23A
89023-013	38-28
89023-013	39-12
89026-004	38-1
89026-005	38-1A
89026-008	38-2
89026-009	38-2A
89026-012	38-1
89026-013	38-1A
89028-002	38-25
89028-002	39-17
89028-002	40-8
89036-002	40-1
89036-002	41-1
89036-003	40-2
89036-004	40-5
89036-005	40-4
89036-006	40-7
89046-002	39-1
89046-004	39-1A
89046-005	39-2
89046-007	39-2A
89085-003	63-47
89090-002	9-53
89090-003	9-43
89090-003	9-43
89097-002	76-4
89097-003	76-5
89276-003	73-48

Part Number	Figure and Index No.
89276-010	73-47
89276-011	73A-60
89276-016	73A-59
89300-005	31-28
89307-000	51-52
89308-000	46-8
89344-006	75A-21
89379-005	81-16
89482-002	69-19
89548-014	14-64
89567-005	34-7
89567-005	34-20
89567-015	34-7
89567-015	34-20
89643-005	2-55
89643-007	2-58D
89643-007	2-59B
89643-009	2-58
89716-002	52-4B
89808-003	51-30A
89840-005	69-60B
89848-002	71A-23
89848-004	71A-11
89848-005	71A-13
89848-007	71A-21
89848-010	71A-9
89848-011	71A-10
89848-013	70-19C
89848-014	71A-6
89848-036	71A-8
89848-038	71A-5
89848-059	71A-7
89848-061	65-22B
89848-062	71A-22
89848-069	71A-24
89848-070	71A-25
89875-005	37-14
89908-003	15-78A
89908-003	37-15
89940-005	61-1F
89940-008	61-1F
95061-008	41-24
95061-009	41-20
95061-020	30-28B
95061-025	64-16B
95061-064	26-47
95061-106	38-5
95061-132	53-32D
95061-133	23-43
95061-135	23-45
95061-136	23-46
95061-141	64-66A
95061-144	24-25
95061-152	55-26
95061-157	41-9
95061-161	38-9
95061-168	23-49
95061-192	56-28B

NUMERICAL INDEX

Part Number	Figure and Index No.
95061-308	46-11C
95061-310	46A-17F
95061-311	46A-17E
95153-020	45A-23
95153-079	45A-23A
95153-101	45-20
95153-101	45-65
95153-101	45A-81
95153-101	45A-97
95153-158	45-20A
95153-158	45A-81
95153-168	45A-28
95153-169	45A-34
95153-170	45A-36
95153-200	45-57
95153-200	45A-89
95153-201	45-67
95153-201	45A-85
95219-000	42-16
95219-000	42A-12
95219-000	42B-10
95219-000	42C-10
95228-000	37-6B
95228-003	37-13C
95229-006	37-13
95507-005	14-53
95636-000	4-6
95636-001	4-6A
95639-004	3-2
95639-005	3-2A
95643-008	2-19
95643-008	26-35
95643-009	2-19A
95643-009	26-35A
95701-002	27-18A
95732-000	11-37
95733-000	11-38
95825-003	11-39
95925-002	11-22A
95936-000	11-41
96041-000	11-70
96143-011	45-8
96143-011	45A-69
96166-000	63-51A
96167-000	63-51B
96268-000	43A-14
96268-000	43A-27
96272-000	34-26
96272-000	81-12
96288-000	54-9
96308-002	4-46
96308-003	4-46A
96330-003	11-43
96333-000	11-62
96333-001	11-62A
96334-000	11-61A
96334-001	11-61C
96339-000	11-44

Part Number	Figure and Index No.
96339-001	11-44A
96349-000	11-71
96349-001	11-71A
96352-002	2-37B
96352-003	2-36B
96392-009	45-1
96562-002	20-16A
96564-000	19-22
96602-000	78-19
96625-000	2-14
96684-000	11-66
96700-004	11-53
96700-005	11-53A
96766-020	26-1
96766-020	27-1
96766-021	26-1A
96766-021	27-1A
96839-000	8-23
96839-001	8-23A
96844-003	3-20
96851-002	10-16
96855-003	12-43C
96863-006	15-20
96864-000	15-21
96865-000	15-61E
96866-002	10-31A
96868-000	15-57
96871-000	54-7
96871-001	54-7A
96877-000	11-47
96877-001	11-47B
96878-000	11-47A
96878-001	11-47C
96880-000	12-25
96884-000	11-68
96884-001	11-68A
96885-000	12-43
96885-001	12-43A
96885-002	12-43B
96890-000	11-23
96890-001	11-23A
96896-000	11-55
96896-002	12-2
96897-000	11-67
96908-000	41-15
96926-000	2-24
96927-000	2-22
96981-011	15-1
96981-011	15-1
96981-012	15-1
96984-000	15-56
96986-000	10-31
96991-000	15-58
96992-000	15-21A
96993-002	15-38
96995-009	15-2
96995-010	15-2A
96996-000	15-47

Part Number	Figure and Index No.
96999-000	15-55
98510-004	30-15
98680-004	66-25
98700-002	2-64
98700-004	2-64A
98700-005	2-64B
99010-005	42-33
99031-000	78-3
99046-005	66-11B
99069-004	15-37
99070-000	15-60
99080-000	66-7
99080-002	66-11A
99080-004	66-11
99094-007	49-5
99095-002	49-6A
99096-003	49-6
99140-000	41-18
99141-003	41-19
99263-000	68-4
99271-000	68-10
99272-000	13-39
99273-000	13-40
99275-002	68-5
99275-002	68-9
99275-004	68-26
99278-003	13-41
99280-000	13-34
99280-001	13-34A
99387-000	68-1A
99387-002	68-3
99387-004	68-1
99387-005	68-1
99387-006	68-3
99421-000	8-41
99422-002	9-61
99429-000	59-16
99430-000	59-18
99466-011	7-2
99466-011	13-1
99466-025	7-2A
99466-025	13-1A
99466-026	13-52
99466-026	13-52
99466-026	13-52
99468-005	13-2
99469-003	13-6
99470-000	13-3
99470-001	13-3A
99471-002	13-5
99471-003	13-5A
99487-000	13-46
99487-001	13-46A
99488-000	13-47
99495-000	68-6
99496-000	13-37
99497-000	66-20
99529-000	66-12

Part Number	Figure and Index No.
99539-000	67-27
99545-000	13-44
99549-007	13-3C
99549-014	13-3B
99549-015	13-6A
99550-002	67-28
99552-000	13-42
99552-002	13-42A
99555-000	13-45
99557-000	68-20
99557-004	68-20
99558-000	13-43
99559-001	13-4A
99559-002	13-4
99561-000	13-38
99561-000	68-23
99569-000	68-25
99569-003	68-25
99572-004	68-24
99572-006	68-24
99609-000	13-19
99615-000	13-35
99615-000	13-35A
99615-001	13-35A
99619-004	19-5
99619-007	19-5
99621-002	19-6
99631-000	13-36
99633-000	65-9A
99633-000	67-8
99637-000	67-2E
99639-000	67-2A
99640-000	67-1
99640-003	67-2
99640-005	67-2B
99640-008	67-1
99640-009	67-2
99641-000	65-7
99641-000	67-6
99642-002	65-4
99642-002	67-3
99642-004	65-4
99642-004	67-3
99643-005	67-2C
99644-000	67-30
99646-002	67-9
99648-000	67-12
99650-000	67-13
99661-000	67-15
99717-000	74-7
99729-001	10-24
99763-000	66-6
99787-000	66-20A
99803-005	19-14
99805-003	13-26A
99813-002	13-26
99813-004	10-40
99820-003	37-7

NUMERICAL INDEX

Part Number	Figure and Index No.
99849-008	46-25
99849-030	64A-11
99853-000	68-14
99854-000	68-11
99854-002	68-11
99856-000	58-11
99862-000	74-1
99867-000	68-16
99867-005	68-16
99983-173	73-49
99983-173	73A-61
99997-000	14-30
99999-000	74-8
100512-002	71A-27
100512-014	71A-27A
100512-015	71A-27B
100512-018	71A-27D
100512-019	71A-27C
100566-003	8-6X
100571-003	61-1Y
100572-003	61-1
100572-004	61-1R
100575-002	75A-2
100575-011	75A-3
100576-002	76-16
100577-002	76-20
100579-002	18-44A
100579-003	18-44C
100586-008	14-51A
100586-008	15-61A
100586-010	14-51B
100586-010	15-61B
100586-010	16-6
100586-012	14-51C
100586-012	15-61C
100587-046	9-75
100587-047	9-76A
100587-050	9-75
100587-056	9-76
100590-004	34-11
100607-002	15-8
100632-002	34-29
100700-002	2-54A
100700-002	81-10A
100700-003	2-54B
100700-003	81-10
100722-002	8-6Y
100756-002	76-17
100776-002	8-6V
100788-002	8-6W
100801-005	34-32
100814-002	19-42
100821-003	66A-1
100834-007	8-29
100834-014	8-53A
100834-020	8-29A
100834-020	8-29A
100835-002	73A-55

Part Number	Figure and Index No.
100835-002	81-39
100835-003	73A-54A
100835-005	73A-54
100835-006	73A-56
100836-003	35-1A
100836-004	35-1
100836-005	35-2A
100836-006	35-2
100836-007	35-3A
100836-008	35-3
100836-021	35-1A
100836-022	35-1
100836-023	35-2A
100836-024	35-2
100836-025	35-3A
100836-026	35-3
100849-004	41A-1
100897-011	2-13B
100902-004	34-12
100912-002	70-21A
100912-003	70-21A
100914-002	13-51
100914-003	13-51
100916-002	43A-30
100917-002	75B-21
100918-002	75B-1
100918-003	75B-13
100920-008	66A-5
100920-009	66A-6
100920-010	66A-7
100922-002	49-16
100923-002	46A-15
100927-003	49-9
100927-005	49-9A
100927-016	49-9B
100927-017	49-9C
100930-012	42B-13A
100932-002	46A-17
100932-003	46A-17A
100932-027	46A-17B
100937-002	51-42
100941-002	48-20
100941-003	48-21
100941-004	48-22
100942-002	64A-12
100943-002	64A-1
100948-002	8-6T
100967-002	75B-2
100970-680	7-3A
100970-682	7-22A
100970-684	7-4A
100972-002	75B-10
101000-003	75A-4B
101000-004	75A-8A
101022-007	42B-21
101022-007	42C-21
101090-002	46-26
101096-002	75A-24

Part Number	Figure and Index No.
101105-002	61-1Z
101118-003	61-1Z
101120-002	46A-19A
101166-010	69-56A
101166-011	69-56B
101171-002	78-21A
101173-006	66-1
101173-007	66-1
101178-004	38-33A
101230-011	34-19
101230-012	34-6
101230-012	35-7
101247-002	8-29A
101247-004	8-29
101257-002	71A-1
101257-003	71A-1
101257-006	71A-1
101257-007	71A-1
101284-004	74-40
101284-005	74-41
101312-002	11-73
101317-002	39-3A
101328-002	19-40
101328-003	19-40A
101335-002	5-17B
101759-002	34-18
104138-002	19-18
104176-002	19-18B
104211-002	39-13B
104211-003	39-13B
104211-004	38-29B
104211-005	38-29B
104215-002	41-2
104215-003	41-2
104215-004	41-2
104215-005	41-2
104215-006	41-3
104215-007	41-3
104215-008	41-3
104215-009	41-3
104371-002	69-56C
104389-002	8-29A
104389-004	8-29
104445-002	69-13
104586-002	48-10C
104642-002	46-1A
104642-002	46A-11A
104687-002	61-1W
104697-002	64A-10
187-627	24-10
187-627	27-6
189-139	14-2
189-139	15-31A
189-139	16-7
189-139	17-35
189-625	9-36D

Part Number	Figure and Index No.
189-625	66-40
189-625	69-43D
189-625	69-44
189-625	79-8
189-732	53-23
189-749	15-38C
380-002	17-22C
380-002	18-37A
400-002	7-43A
400-002	38-22
400-002	75-18A
400-002	75A-11A
400-003	19-23
400-003	19-24
400-003	20-25
400-003	56-35
400-004	2-58A
400-004	20-26
400-004	68-15A
400-008	55-35
400-009	41-23
400-012	26-58
400-012	56-12
400-012	56-32
400-019	24-3A
400-025	76-18
400-053	53-59
400-055	55-9
400-056	19-31
400-056	57-22
400-056	61-26
400-058	47-9
400-059	47-14
400-102	47-8A
400-103	47-11A
400-108	23-60
400-112	23-62
400-113	14-16
400-113	31-53
400-184	51-19
400-192	23-59
400-219	23-57
400-224	68-22
400-229	23-56
400-279	23-67
400-437	56-42A
400-437	58-48
400-437	58-49
400-437	63-46A
400-437	63-47B
400-437	69-1B
400-438	6-24D
400-438	8-6K
400-438	22-11
400-438	31-60
400-438	44-23A
400-438	48-6B
400-438	56-27

NUMERICAL INDEX

Part Number	Figure and Index No.
400-438	58-50
400-438	62-15
400-438	75A-22A
400-440	23-61
400-440	39-19
400-440	54-22
400-440	58-14B
400-440	68-33
400-440	75A-6A
400-441	2-59
400-441	38-36
400-441	38-37
400-441	39-18
400-441	55-32
400-441	68-29
400-441	76-19
400-443	23-53
400-443	32-8
400-443	56-54
400-443	63-24
400-444	2-42
400-444	32-7
400-444	56-28
400-446	13-29A
400-446	56-14
400-449	58-53
400-450	19-38
400-451	26-53
400-452	55-33
400-456	62-13
400-460	47-15
400-461	46-33
400-464	46A-19B
400-479	55-38
400-496	75A-2
400-616	66-8
400-653	61-25
400-665	14-24
400-668	14-28
400-669	15-74
400-672	60-3
400-673	51-87
400-673	59-13
400-673	62-16
400-674	51-87
400-674	55-39
400-674	57-13
400-674	59-10
400-680	56-55
400-711	26-32
400-728	76-14
400-744	24-45
400-761	23-65
400-861	68-28
400-861	68-31
400-861	68-34
400-862	14-54A
400-862	14-57

Part Number	Figure and Index No.
400-864	23-61C
400-867	30-10
400-870	15-63
400-871	23-25
400-871	30-27
400-876	31-58
400-880	26-29
400-880	26-33
400-916	40-9
400-928	39-3C
400-932	39-3D
401-187	66-33A
401-188	26-50
401-188	55-34
401-188	57-11
401-189	26-51
401-257	30-9
401-264	19-44
401-265	24-40
401-266	5-21
401-266	5-22
401-266	6-24C
401-266	11-35B
401-266	15-56A
401-266	21-4
401-266	27-15
401-266	51-86
401-266	54-12
401-266	58-51
401-269	11-35C
401-269	19-30
401-269	23-64
401-269	46-17
401-269	51-88
401-269	58-52
401-269	61-13A
401-269	68-32
401-269	69-12E
401-269	76-19
401-270	2-41
401-273	23-16A
401-273	27-45A
401-273	68-8
401-274	23-68
401-279	15-75J
401-279	58-55
401-280	30-26
401-291	76-18
401-300	63-23A
401-302	23-70
401-306	75-19
401-307	69-2A
401-307	69-3A
401-307	69-48A
401-307	75-10A
401-307	75-20
401-310	41-12C
401-310	55-42

Part Number	Figure and Index No.
401-310	56-33
401-310	61-27
401-315	23-58
401-315	55-37
401-318	38-21
401-318	38-21B
401-318	56-56
401-320	27-41
401-329	27-38
401-330	19-34
401-333	61-12
401-334	68-30
401-335	26-57
401-343	46-19
401-353	57-14
401-354	57-12
401-378	59-12
401-385	55-36
401-387	59-11
401-390	75A-26A
401-405	23-73
401-405	46A-12
401-406	23-73
401-461	66-27
401-527	46A-14A
401-533	46-6B
401-535	46-54
401-535	46A-14
401-546	66-31A
401-919	48-4A
401-970	66-29
401-986	66-25A
401-987	66-26
401-988	66-30
401-992	66-28
401-992	66-33
402-057	9-68
402-060	9-60
402-312	27-35
402-314	62-6
402-315	23-55
402-344	27-34
402-345	27-34
402-680	19-25
402-680	19-25
402-869	23-54
402-890	13-16
402-897	13-15
402-899	3-4B
402-903	2-38
402-904	2-37
402-906	2-35
402-907	2-40
402-908	2-33
402-909	2-39
402-910	2-34
402-911	2-36
402-915	2-32

Part Number	Figure and Index No.
402-921	26-55
402-927	26-28
402-938	23-15
402-960	26-52
404-100	19-31C
404-100	26-29B
404-100	26-33C
404-100	47-9B
404-100	47-14D
404-100	51-71A
404-100	51-87A
404-100	55-9B
404-100	56-55B
404-101	14-16B
404-101	23-55B
404-101	23-60C
404-101	23-62B
404-101	24-43C
404-101	27-35B
404-101	31-53B
404-101	46-19D
404-101	47-8B
404-101	47-11C
404-102	23-59C
404-102	24-42B
404-102	27-34B
404-102	27-36B
404-102	51-23
404-104	61-11A
404-123	23-56D
404-123	23-57D
404-124	23-67B
404-138	18-14A
404-155	8-6J
404-156	47-15D
404-156	76-12C
404-224	13-14B
404-224	15-24
404-224	19-32A
404-224	31-56B
404-224	46-24B
404-224	46-68A
404-224	51-79
404-224	56-27B
404-224	56-29B
404-224	56-53A
404-224	61-4D
404-224	63-51C
404-224	73A-62C
404-225	26-54
404-225	69-69D
404-263	64-52B
404-320	55-8A
404-320	56-48
404-321	30-6
404-322	23-31
404-322	55-8
404-322	56-47

NUMERICAL INDEX

Part Number	Figure and Index No.
404-322	75B-6D
404-323	30-23
404-323	42A-22C
404-323	76-14C
404-325	58-38
404-326	26-30
404-391	14-24B
404-391	61-25A
404-392	14-28B
404-392	51-71A
404-392	53-59B
404-392	55-39C
404-392	57-13B
404-392	57-22B
404-392	59-10B
404-392	59-13B
404-392	60-3A
404-392	62-16B
404-392	64-70A
404-393	23-15B
404-393	26-32B
404-395	26-28B
404-395	26-55B
404-399	26-38A
404-489	8-29C
404-489	51-75A
404-489	51-92B
404-526	5-21B
404-526	11-35E
404-526	13-29D
404-526	15-21E
404-526	17-21B
404-526	19-30B
404-526	19-38B
404-526	23-16C
404-526	23-25B
404-526	23-53B
404-526	23-54B
404-526	23-61B
404-526	23-61E
404-526	23-64A
404-526	23-68B
404-526	23-69B
404-526	26-53B
404-526	27-15B
404-526	27-43C
404-526	27-44C
404-526	27-45C
404-526	30-11B
404-526	30-26C
404-526	30-28C
404-526	31-54B
404-526	31-55B
404-526	31-58B
404-526	31-60B
404-526	32-7B
404-526	32-8B
404-526	34-31B

Part Number	Figure and Index No.
404-526	38-36B
404-526	38-37B
404-526	43A-26
404-526	43A-34
404-526	44-14C
404-526	44-23C
404-526	44-24C
404-526	45-53
404-526	45-55
404-526	45A-19
404-526	45A-26
404-526	45A-60
404-526	46-17C
404-526	46-24A
404-526	46-33C
404-526	46-48C
404-526	46-58C
404-526	46-60C
404-526	46A-25C
404-526	46A-33D
404-526	47-22C
404-526	48-13B
404-526	48-14B
404-526	51-28D
404-526	51-43B
404-526	51-44B
404-526	51-63B
404-526	51-66C
404-526	51-74A
404-526	51-85
404-526	51-88C
404-526	51-94A
404-526	51-95B
404-526	53-19C
404-526	53-55B
404-526	55-32B
404-526	55-33B
404-526	55-38B
404-526	56-27B
404-526	56-27D
404-526	56-28C
404-526	56-29G
404-526	56-42G
404-526	58-14D
404-526	58-50B
404-526	58-52C
404-526	58-53B
404-526	58-53C
404-526	58-55E
404-526	61-4E
404-526	61-13D
404-526	61-37B
404-526	62-13B
404-526	63-46B
404-526	63-47C
404-526	64-19B
404-526	64-22A
404-526	64-24B

Part Number	Figure and Index No.
404-526	64-27A
404-526	64-52A
404-526	64-67B
404-526	68-8B
404-526	68-28C
404-526	68-29B
404-526	68-31B
404-526	68-32B
404-526	68-34C
404-526	69-2D
404-526	69-12G
404-526	74-31
404-526	75-12B
404-526	75A-2C
404-526	75A-23C
404-526	76-13C
404-526	76-19B
404-528	23-38B
404-528	45A-31
404-528	46A-17D
404-528	48-10A
404-528	64-34A
404-528	64-35A
404-528	64-66B
404-528	65-3C
404-528	69-12C
404-528	69-36E
404-528	69-37D
404-528	73-46B
404-528	73A-58B
404-528	78-21F
404-528	80-5
404-529	14-39B
404-529	34-7G
404-529	34-24C
404-529	41-21B
404-529	51-73B
404-529	51-75A
404-529	51-76B
404-529	51-92B
404-529	53-32C
404-529	53-46B
404-529	56-31B
404-529	64-68A
404-529	67-13C
404-529	69-22B
404-529	69-38D
404-529	69-43C
404-529	74-28
404-530	2-30B
404-530	7-43C
404-530	19-23B
404-530	19-34B
404-530	20-25B
404-530	20-26B
404-530	23-58C
404-530	27-19C
404-530	27-41B

Part Number	Figure and Index No.
404-530	38-21A
404-530	39-3E
404-530	55-35C
404-530	55-42B
404-530	56-32D
404-530	56-33C
404-530	56-35B
404-530	56-56B
404-530	61-12B
404-530	61-26B
404-530	61-27A
404-530	62-6B
404-530	64-26B
404-530	68-15C
404-530	68-30B
404-530	75-18D
404-530	75A-11D
404-530	76-18B
404-531	2-37C
404-531	2-38C
404-531	9-60B
404-531	9-68B
404-531	24-45B
404-531	26-50B
404-531	51-76A
404-531	55-34C
404-531	55-36B
404-531	57-11B
404-531	57-12B
404-531	57-14B
404-531	59-11B
404-532	2-32D
404-532	2-33B
404-532	2-34C
404-532	2-36C
404-532	2-39B
404-532	45-48
404-556	13-15C
404-556	13-16C
404-561	3-13B
404-563	23-73C
404-563	46A-12B
404-593	69-41A
404-596	70-13C
404-757	61-4C
404-832	26-52B
404-833	15-50A
404-833	60-5B
404-835	61-10B
404-835	61-29B
404-835	68-33B
404-836	27-38B
404-836	38-22B
404-836	56-12B
404-840	24-44
404-843	27-29
404-887	2-41B
404-887	2-42B

NUMERICAL INDEX

Part Number	Figure and Index No.
404-887	30-10B
404-889	59-12B
404-890	23-65C
404-891	46-6D
404-891	46-54C
404-891	46A-14D
404-891	66-31C
404-892	56-14A
404-892	56-42C
404-896	78-21D
404-902	75B-17B
404-902	75B-18B
404-902	79-14
404-909	79-2B
405-350	30-27D
405-450	48-10B
405-451	23-39B
405-457	70-11C
405-526	6-24
406-345	51-25
406-357	74-36
406-362	34-7C
406-362	34-20C
406-369	58-36B
406-373	74-37
406-393	69-20
406-394	64-36A
406-415	3-3B
406-418	44-33
406-424	37-9B
406-443	46A-19F
406-443	48-10E
406-443	48-11B
406-443	48-17B
406-443	66A-15B
406-447	37-17B
406-527	2-35C
406-527	2-40C
406-551	58-51B
406-615	2-58E
406-625	51-83B
406-636	65-11C
406-636	65-27C
406-637	2-29C
406-637	19-25B
406-637	24-3C
406-637	24-3F
406-642	18-50
406-660	26-59
406-707	53-35C
406-805	2-59C
406-809	18-49
406-809	18-49
406-816	5-22B
406-823	18-51
406-823	18-51
406-825	5-23
406-842	21-15A

Part Number	Figure and Index No.
406-865	11-25J
406-935	2-28
406-942	2-23
407-040	70-13B
407-040	79-17
407-041	80-2B
407-042	69-30C
407-043	31-56A
407-043	31-59A
407-043	46-11A
407-043	46-17B
407-043	51-79A
407-043	54-12B
407-043	54-22A
407-043	73A-62A
407-043	75-12A
407-045	23-39A
407-045	76-14B
407-046	66-26B
407-046	66-27C
407-046	66-28B
407-046	66-30B
407-120	15-30A
407-120	74-27
407-120	78-1A
407-136	75-18C
407-136	75A-11C
407-137	69-2E
407-564	75B-16B
407-565	75A-11B
407-566	66-33B
407-567	31-18
407-569	15-51
407-583	75A-24B
407-680	14-44B
407-680	14-46C
407-800	34-24A
407-800	46-17A
407-800	46-24
407-800	46-68
407-800	56-29E
407-800	75A-2A
407-800	76-13B
407-801	69-2C
407-801	75-10B
407-801	75-20A
408-042	69-36D
408-042	69-37C
408-042	69-38B
408-042	69-39B
408-042	69-41B
408-043	63-19A
408-043	69-38B
408-043	69-39C
408-043	69-40B
408-043	74-30
408-044	48-12B
408-044	48-18B

Part Number	Figure and Index No.
408-044	56-13A
408-044	56-27A
408-051	47-23B
408-051	48-4B
408-051	48-15A
408-051	64A-6
408-051	75B-6C
408-100	51-76A
408-100	56-29A
408-105	78-1E
408-106	23-65A
408-813	56-29F
408-815	51-21
408-832	18-8A
408-833	47-14A
408-834	40-10
410-010	2-52
410-011	23-69
410-039	5-18
410-039	49-4B
410-039	49-12
410-039	49-17
410-046	2-10A
410-046	53-55
410-047	61-2
410-053	51-81
410-054	19-26
410-054	19-33
410-066	54-27
410-100	14-62D
410-100	14-62F
410-240	2-53
410-241	51-92
410-248	17-24A
411-349	23-63
411-515	51-73
411-530	16-14
411-530	34-31
411-530	64-19A
411-530	64-24A
411-531	48-11A
411-531	48-12A
411-531	48-13
411-531	48-14
411-531	48-17
411-531	51-43A
411-531	53-19A
411-531	53-35B
411-531	74-35
411-531	75A-20A
411-532	9-36B
411-532	30-28
411-532	31-54
411-532	31-55
411-532	44-14A
411-532	45-54
411-532	45A-25
411-532	46-48B

Part Number	Figure and Index No.
411-532	46-58B
411-532	46-60B
411-532	46A-15A
411-532	46A-25B
411-532	46A-33C
411-532	48-18A
411-532	51-28C
411-532	51-44A
411-532	51-63A
411-532	51-66B
411-532	64-22
411-532	64A-3
411-532	64A-10A
411-532	65-11A
411-532	65-19A
411-532	65-27B
411-532	66A-15
411-532	75B-7A
411-532	75B-11A
411-532	75B-14A
411-532	75B-16A
411-533	27-43A
411-533	27-44A
411-533	45-51
411-533	45A-17
411-533	45A-58
411-533	46A-36B
411-533	47-22A
411-533	51-76
411-533	64-27
411-534	56-42D
411-534	64-16A
411-534	75A-5A
411-534	75B-15A
411-535	64-67
411-536	30-11
411-537	56-29
411-538	56-53
411-539	61-37
411-540	17-21
411-544	48-16
411-582	63-50C
411-586	31-56
414-490	51-18A
414-506	8-29E
414-515	2-13A
414-515	45A-2
414-673	15-27
414-690	61-1G
414-741	8-29H
414-748	56-9
414-748	56-22A
414-748	56-34
414-748	78-21B
414-757	78-21H
414-761	2-13C
414-761	15-53
414-762	56-39

NUMERICAL INDEX

Part Number	Figure and Index No.
414-763	8-28D
414-769	15-50
414-772	41-25
414-774	14-39A
414-777	15-52
414-781	19-18D
414-783	19-27
414-783	37-8A
415-308	69-30A
415-308	75A-24A
415-310	41-12A
415-314	2-11A
415-317	43A-35
415-318	34-31
415-319	73A-62
415-321	9-76B
415-324	43A-31
415-332	44-24A
415-370	41-27
415-372	41-27
415-378	19-39
415-378	34-7E
415-378	45-36A
415-378	45A-49
415-380	64-52
415-381	2-63D
415-381	2-63E
415-385	75B-17A
415-385	75B-18A
415-421	61-1H
415-454	17-36
415-499	51-55A
415-499	67-13A
415-505	70-13A
415-513	73-46C
415-513	73A-58C
415-514	69-12A
415-514	69-36B
415-514	69-37A
415-514	69-58F
415-515	54-19C
415-518	15-28
415-518	64-34
415-518	64-35
415-518	65-3A
415-518	69-13N
415-518	69-19A
415-518	69-69B
415-518	73-46
415-518	73A-58
415-518	80-7
415-519	45A-30
415-520	18-16
415-520	41A-5
415-520	45-47
415-520	64-66
415-520	80-2A
415-521	34-7A

Part Number	Figure and Index No.
415-521	34-20A
415-521	46A-17C
415-521	55-24A
415-521	78-28
415-521	80-8
415-525	69-36B
415-530	28-17A
415-531	69-40A
415-532	64-29
415-533	2-12A
415-533	8-6H
415-533	19-46
415-533	51-24
415-533	51-76
415-533	56-31
415-533	69-38A
415-533	69-39A
415-533	74-32
415-535	8-29F
415-535	15-30
415-535	18-42
415-535	45-1A
415-535	45-31A
415-535	45A-46
415-535	51-75
415-535	51-76
415-535	53-8A
415-535	56-26A
415-535	60-5
415-535	63-15B
415-535	64-68
415-535	69-22A
415-535	69-60C
415-535	69-68A
415-535	74-34
415-535	75A-21A
415-535	78-1C
415-536	18-14C
415-536	51-83
415-536	63-19C
415-536	70-11A
415-537	16-12
415-537	18-48
415-539	17-34
415-540	41-21
415-540	53-32E
415-544	14-65B
415-544	18-45C
415-544	53-40A
415-544	74-33
415-544	78-1B
415-551	51-54A
415-553	79-4
415-574	69-43A
415-628	5-20
415-631	15-79A
416-098	53-46
416-098	53-60

Part Number	Figure and Index No.
416-390	61-1X
416-778	14-62B
416-785	46-80A
416-785	75A-23A
416-785	76-13
416-787	34-31
416-787	51-95
416-794	76-12
416-994	31-59
417-694	50-13
417-776	51-74
418-204	42B-20D
418-419	47-23A
418-419	48-15
418-600	51-83
418-704	42-26
418-704	42A-17D
418-704	42C-20D
419-474	38-15A
419-474	39-8A
419-520	58-4A
419-520	78-27
419-594	14-49
419-623	69-29A
419-625	17-25A
419-641	17-22A
419-641	18-57
419-641	64-57
419-642	17-22B
419-648	64-36
419-678	14-62C
419-678	14-62E
419-681	18-41
419-683	14-65C
419-683	15-38B
419-713	44-31
419-713	53-58
419-920	74-42
419-923	53-8B
419-939	14-62A
419-954	78-33
419-956	17-23B
419-956	35-8
419-967	14-9
419-967	60-10
420-704	45A-21
424-000	30-25A
424-041	14-24C
424-041	14-25A
424-041	14-29B
424-041	61-25B
424-050	27-35C
424-051	14-16C
424-051	14-28C
424-051	14-59B
424-051	15-12B
424-051	15-14A
424-051	15-65B

Part Number	Figure and Index No.
424-051	19-31D
424-051	23-15C
424-051	23-60D
424-051	23-62C
424-051	26-29C
424-051	26-31B
424-051	26-32C
424-051	26-33D
424-051	27-34C
424-051	27-36C
424-051	31-52A
424-051	31-53C
424-051	32-20B
424-051	32-21B
424-051	32-22B
424-051	32-23B
424-051	38-7C
424-051	47-8C
424-051	47-9C
424-051	47-11D
424-051	47-14E
424-051	51-23A
424-051	51-71B
424-051	51-80B
424-051	51-87B
424-051	53-54B
424-051	53-56A
424-051	55-9C
424-051	55-39D
424-051	56-55C
424-051	57-13C
424-051	57-16A
424-051	57-22C
424-051	58-43A
424-051	59-4A
424-051	59-10C
424-051	59-13C
424-051	60-3B
424-051	60-4A
424-051	61-26C
424-051	62-16C
424-051	64-70B
424-052	23-59D
424-052	24-51B
424-052	26-56B
424-052	46-19E
424-052	51-88E
424-052	53-59C
424-052	56-37
424-053	24-42C
424-053	24-43D
424-053	53-57
424-053	56-38
424-053	57-18
424-054	57-17
424-054	57-21
424-058	53-45
424-059	26-28C

NUMERICAL INDEX

Part Number	Figure and Index No.
424-059	26-55C
424-060	39-4C
424-060	61-11B
424-061	23-56E
424-061	23-57E
424-061	23-67C
424-062	55-11A
424-071	27-53
424-095	17-10
424-095	23-55C
424-095	51-70
424-123	58-47
424-139	38-7A
424-141	14-29
424-146	24-51
424-162	15-14
424-163	15-12
424-172	17-8
424-175	53-56
424-176	32-20
424-178	14-25
424-178	31-52
424-180	58-43
424-181	26-31
424-181	32-21
424-184	32-22
424-185	60-4
424-187	26-56
424-192	17-9
424-195	32-20
424-203	14-59C
424-204	14-59
424-204	15-65
424-357	32-23
424-502	55-43
424-513	55-30
434-120	63-26
434-126	64-69
434-128	45-45
434-128	45A-9
434-128	45A-12
434-128	65-5A
434-137	52-19
434-137	52-19
434-137	52-19
434-138	15-2B
434-138	52-20
434-141	45A-32
434-142	63-21A
434-151	31-49
434-155	31-48
434-160	31-50
434-172	52-16
434-192	45-31C
434-192	45A-14
450-035	75-1
450-101	75A-1
451-731	27-47

Part Number	Figure and Index No.
451-735	27-48
451-739	24-48
451-786	29-9
451-829	68-12
451-841	56-9A
451-841	69-54A
451-841	69-55A
451-881	43A-21
452-009	26-26
452-104	17-34C
452-104	41-28
452-334	23-7
452-334	26-49
452-335	30-5
452-335	55-7
452-335	56-45
452-336	55-7A
452-336	56-46
452-366	24-12
452-368	26-18
452-372	61-4
452-386	38-10
452-387	4-30
452-387	4-32
452-387	4-34
452-387	4-36
452-387	4-40
452-387	21-7
452-387	22-7
452-388	61-6
452-389	61-5
452-394	13-14
452-413	58-20
452-418	58-19
452-445	23-9
452-477	24-21
452-544	55-27
452-558	68-21
452-561	68-19
452-570	68-17
452-571	68-18
452-575	26-5
452-575	26-10
452-584	30-8
452-606	51-53
452-619	46-21
452-679	39-14
452-692	38-30
452-729	23-51
452-744	56-17
452-935	65-8
452-935	67-7
453-124	24-37
453-124	27-32
453-188	23-30
453-674	15-67
453-714	32-19
453-732	63-45

Part Number	Figure and Index No.
453-742	69-4
453-799	65-5B
453-838	75-15
453-856	14-52
453-856	15-72
453-966	2-62
454-008	66A-12
454-053	27-33
454-225	63-50
454-289	45A-67
454-732	65-16
454-732	73-5
454-732	73-15
454-732	73-16
454-732	73-23
454-732	73-24
454-732	73-25
454-732	73-26
454-732	73-32
454-732	73-36
454-732	73-37
454-732	73A-12
454-732	73A-22
454-732	73A-23
454-732	73A-30
454-732	73A-31
454-732	73A-43
454-732	73A-44
454-734	73-10
454-734	73-11
454-734	73-15
454-734	73-25
454-734	73A-17
454-734	73A-19
454-734	73A-32
454-736	73-6
454-736	73-22
454-736	73-35
454-736	73A-4
454-736	73A-29
454-736	73A-49
454-736	73A-53
454-738	73-3
454-738	73-4
454-738	73-8
454-738	73-9
454-738	73-12
454-738	73-13
454-738	73-18
454-738	73-19
454-738	73-20
454-738	73-20A
454-738	73-21
454-738	73-27
454-738	73-31
454-738	73-33
454-738	73-40
454-738	73-41

Part Number	Figure and Index No.
454-738	73-42
454-738	73-43
454-738	73A-3
454-738	73A-14
454-738	73A-15
454-738	73A-18
454-738	73A-20
454-738	73A-25
454-738	73A-27
454-738	73A-28
454-738	73A-36
454-738	73A-38
454-738	73A-39
454-738	73A-40
454-738	73A-47
454-739	73-19
454-739	73A-26
454-755	73-34
454-755	73A-5
454-755	73A-6
454-755	73A-7
454-755	73A-8
454-755	73A-9
454-755	73A-11
454-766	73-35
454-766	73A-35
454-766	73A-37
454-766	73A-48
454-797	65-16
454-797	73-16
454-797	73-17
454-797	73A-24
454-806	46-44
454-813	51-65
454-837	43-15
454-849	53-21
454-852	66A-10
454-862	66-24B
454-862	66A-13
454-868	46A-33A
454-868	51-68
454-868	52-2B
454-868	64-21
454-868	66-24
454-868	66A-10
454-868	66A-11
454-868	74-19
454-887	15-21B
454-887	51-62
454-887	63-50B
454-887	64-16
454-887	64-67C
454-905	53-3
454-927	48-11
454-928	45-39
454-928	45A-16
454-928	45A-24
454-928	64-19

NUMERICAL INDEX

Part Number	Figure and Index No.
454-929	31-61
454-929	46-58A
454-929	51-28A
454-929	51-61A
454-929	51-63
454-929	51-66A
454-929	63-15A
454-929	63-19D
454-930	48-11C
454-930	51-61
454-930	51-61A
454-930	51-64
454-930	52-3A
454-930	56-42
454-930	65-27A
454-932	51-61
454-932	53-32F
454-932	66-24A
454-932	66-24B
454-933	53-32A
454-933	53-35A
454-935	46-58A
454-935	46-60A
454-935	46A-25A
454-935	46A-33B
454-935	51-66
454-935	52-2A
454-935	52-3B
454-942	43A-29
454-977	46-48
454-977	51-67
454-977	66-24A
454-977	66A-14
454-983	46-64
454-983	52-12
454-983	52-12
454-993	46A-18A
454-993	64A-9
454-994	64-40
455-002	14-67C
455-006	66A-9
455-008	66A-9
455-035	42A-19A
455-124	24-36
455-124	27-31
455-151	75-11
455-154	42-25
455-154	42A-17C
455-154	42B-20C
455-154	42C-20C
455-173	45-34
455-173	45A-44
455-173	45A-83
455-211	75A-14
455-211	75B-7
455-357	51-29
455-405	63-28
455-417	45A-66

Part Number	Figure and Index No.
455-741	40-5A
455-742	39-3
455-743	40-2A
455-938	31-3
455-944	32-29
455-944	33-16
455-968	32-29
455-968	33-1
455-987	23-2A
456-016	23-29
456-615	67-14
456-682	54-23
456-682	54-28
456-682	81-11
456-703	69-13E
456-703	69-49
456-703	70-8A
456-703	70-22
456-703	72-45
456-714	70-15A
456-728	75B-6
456-728	76-6
456-758	69-13E
456-758	71A-26
458-848	52-4A
458-848	52-15
458-848	53-21
458-849	52-15
458-865	63-30
458-876	52-13
458-879	45-42
458-879	45A-33
458-880	31-41
458-888	45A-22
458-891	32-27
458-891	63-31
458-893	45-10
458-893	45-22
458-893	45-66
458-893	45A-71
458-893	45A-98
458-894	31-42
458-894	32-26
458-894	63-34
458-900	31-39
458-900	31-43
458-900	63-32
458-904	32-25
458-905	46-30
458-905	53-50
458-910	63-33
458-914	46-31
458-914	53-47
458-938	46A-34
458-940	45A-84
458-940	52-4A
458-940	52-4A
458-940	52-4A

Part Number	Figure and Index No.
458-958	43-8
458-958	43A-6
458-958	44-10
459-441	15-36
459-886	34-29
459-957	26-27
460-685	46-84
460-691	24-26
460-691	26-3
460-691	26-8
460-801	2-20
460-801	26-21
460-801	26-36
460-807	43-10
460-807	43A-9
460-888	43-11
460-888	43A-23
461-391	37-9A
461-627	75B-5
461-629	69-45A
461-629	74-9
461-629	74-13
461-629	75-25
461-629	75-28
461-629	75A-19
461-629	75A-27A
461-629	75A-27C
461-648	75-27
461-649	75A-27E
461-653	75B-13A
461-657	75-23
461-659	75B-19A
461-660	75B-19
461-660	75B-20
461-684	75B-20A
461-710	54-13A
461-711	54-13
461-750	53-18
461-764	44-1A
461-765	44-1A
461-915	42C-12A
462-012	69-5
462-024	24-39
462-024	27-27
462-034	24-6
462-034	27-22
463-255	46-2
463-262	46A-10
463-389	78-30
463-400	49-2C
463-400	49-3C
463-406	69-23
464-029	15-48
464-131	26-24
464-142	15-32
464-412	14-48
464-412	15-66
465-258	69-45B

Part Number	Figure and Index No.
465-258	74-12
466-401	68-12
467-045	48-18
468-029	75A-5
469-600	19-47
469-600	80-6
470-516	46-6A
470-516	46A-13
472-017	49-6B
472-027	37-3A
472-027	37-14B
472-027	69-11A
472-028	70-8B
472-028	72-44A
472-034	37-3A
472-034	37-4B
472-034	69-11A
472-054	70-8B
472-054	72-44
472-054	74-11
472-054	74-11
472-071	69-14A
472-071	69-58
472-077	16-4
472-151	71-1A
472-200	65-22A
472-661	69-14A
472-969	42-11
473-195	37-1A
473-195	37-9
473-700	37-1A
473-700	37-12
474-107	16-2
474-124	68A-75
474-364	61-1U
475-115	46-6
475-115	46A-13
475-210	65-5
475-210	67-4
475-272	69-60B
476-643	63-37
476-647	45-62
476-647	45A-76
476-647	45A-94
476-648	27-46
476-648	63-36
476-673	69-6
476-673	75B-8
476-675	69-7
476-683	69-8
476-683	75A-15
476-688	46A-23
476-695	75A-16
477-617	45A-38
477-618	31-51
477-618	63-44
477-619	52-11
477-619	52-11B

NUMERICAL INDEX

Part Number	Figure and Index No.
477-621	46-35
477-621	53-49
477-621	53-64
477-627	52-17
477-628	52-10
477-629	46-39
477-629	46A-26B
477-629	46A-28B
477-629	46A-34B
477-629	63-43
477-640	15-27A
477-640	19-37
477-668	46-11B
477-672	19-26B
477-672	19-33B
477-672	21-16
477-691	52-18
477-691	53-21B
477-692	15-75E
477-696	18-8B
477-701	15-75H
477-708	38-21C
477-708	40-9B
477-710	69-51C
477-725	42-12C
477-809	8-6S
477-809	11-25E
477-809	18-14B
477-826	21-18
477-850	43-1A
477-860	53-43A
477-861	2-25
479-402	46-22
480-656	42-19C
480-656	42A-22E
480-691	26-39
480-694	15-13
480-700	24-13
480-701	38-19
480-701	39-4B
480-730	61-10
480-732	38-20
480-732	39-9A
480-800	14-26
481-247	78-1
481-374	70-26
481-388	42-12A
481-388	42A-21
481-388	69-67
481-640	58-37
481-651	61-16
481-652	57-4
481-708	53-18
481-772	7-18
481-879	63-1C
481-880	63-1C
481-900	53-18
484-078	53-20

Part Number	Figure and Index No.
484-125	76-15
484-139	46-65
484-190	75A-23
484-209	69-30
484-209	74-2
484-373	69-3
484-373	76-10
484-467	74-14
484-494	69-13F
484-529	51-52A
484-684	24-7
484-684	27-24
484-685	27-25
484-701	31-8
484-706	31-13
484-714	27-23
484-719	26-4
484-719	26-9
484-723	24-9
484-727	31-9
484-747	58-16
484-755	49-2D
484-755	49-3D
484-788	33-23
484-790	24-4
484-790	27-5
484-792	8-33
484-792	27-19D
484-799	24-5
484-799	27-21
484-828	24-34
484-828	27-26
484-830	15-59
484-879	46-34
485-048	54-17C
485-129	15-25
485-193	24-8
485-196	66-35
485-196	66-35
485-197	66-36
485-198	66-38
486-079	61-1J
486-102	9-76C
486-106	8-52D
486-106	8-54B
486-145	14-9A
486-151	18-51B
486-160	15-34
486-195	69-51A
486-230	37-17A
486-230	64-40B
486-271	15-21C
486-284	42-24
486-284	42A-17B
486-284	42B-20B
486-286	18-49A
486-286	18-50A
486-286	18-51A

Part Number	Figure and Index No.
486-291	2-30
486-294	79-15
486-304	56-13
486-304	56-36
486-317	31-28A
486-318	31-28A
486-466	54-11
486-467	54-11A
486-468	54-19
486-469	54-19A
486-594	46-56A
486-684	69-56
486-684	75B-15
486-976	53-43B
487-152	69-2
487-167	69-3
487-167	75B-11
487-169	69-2
487-437	47-10
487-608	74-21
487-629	34-24
487-654	75B-18
487-672	75B-17
487-678	75B-4
487-684	49-2
487-685	49-2A
487-686	49-3
487-687	49-3A
487-722	74-20
487-922	69-50
487-925	56-8
487-925	69-54
487-925	69-55
487-936	70-9
488-196	34-17
488-310	45-33
488-310	45A-43
488-315	45-6
488-315	45-10
488-315	45-23
488-315	45-24
488-315	45-60
488-315	45A-27
488-315	45A-55
488-315	45A-66
488-315	45A-74
488-315	45A-92
488-315	45A-96
488-320	63-38
488-327	51-51
488-358	78-18
488-363	63-1B
488-380	45-64
488-389	75B-6A
488-401	78-17
488-474	63-40
488-499	32-28
488-499	63-39

Part Number	Figure and Index No.
488-545	69-9
488-701	45-56
488-701	45A-13
488-702	45-59
488-702	45A-91
488-702	65-29
488-706	45-46
488-722	45-5
488-722	75A-9
489-400	70-6
489-463	69-46
489-873	58-45
489-910	55-28
489-910	57-5
489-910	59-7
489-910	61-32
490-629	75A-26B
491-049	45A-35
491-050	31-40
491-050	32-5
491-053	53-44
491-055	46-60
491-059	45-6
491-059	45-25
491-059	45A-37
491-059	45A-55
491-060	31-44
491-060	63-33
491-060	63-42
491-063	46-60
491-063	46-83
491-063	46A-26
491-063	63-41
491-064	52-8
491-065	52-9
491-112	45-38
491-112	45A-10
491-172	66-37
491-806	54-6
492-091	46-27
492-100	45-9
492-100	45A-70
492-240	43-5
492-240	43A-11
492-241	45-32
492-241	45A-42
494-001	18-41A
494-004	44-32
494-004	53-58A
494-037	49-4C
494-037	49-12A
494-037	49-17A
494-040	38-22A
494-066	58-51A
494-073	8-29G
494-081	44-32
494-087	76-12A
494-087	76-13A

NUMERICAL INDEX

Part Number	Figure and Index No.
494-093	61-10A
494-101	41-25A
494-101	78-21C
494-114	27-30
494-141	15-34A
494-177	33-26
494-192	63-24A
494-228	2-35B
494-228	2-40B
494-411	42A-19B
494-678	80-2
506-516	8-28E
506-525	8-6F
506-536	8-6E
506-541	78-29
506-543	8-6P
506-543	8-6Q
508-008	75A-23B
514-702	56-22B
514-748	42-1A
514-748	42-10A
514-748	42-29A
514-748	42-32A
514-748	42A-18A
514-748	42B-26A
514-748	42C-26A
514-751	42-4A
514-751	42-6A
514-751	42-7A
514-751	42-8A
514-751	42-9A
514-751	42-13A
514-751	42-14A
514-751	42-16A
514-751	42-28A
514-751	42-30A
514-751	42-31A
514-751	42-33A
514-752	42-12B
515-709	42A-1A
515-710	79-2A
515-712	71A-28
515-715	42A-9A
515-718	42B-29
515-718	42C-28
517-810	42B-30
517-810	42C-29
518-014	23-38A
519-751	45-8A
519-751	45A-72
519-853	14-44
519-853	14-46
519-853	15-49
519-853	15-54
520-000	42B-6A
520-000	42B-7A
520-009	42A-4A
520-009	42A-6A

Part Number	Figure and Index No.
520-009	42A-7A
520-009	42A-8A
520-009	42A-12B
520-009	42A-14A
520-009	42A-15A
520-009	42B-4A
520-009	42B-10A
520-009	42B-13B
520-009	42B-22A
520-009	42B-24A
520-009	42B-25A
520-009	42B-27A
520-009	42C-4A
520-009	42C-6A
520-009	42C-7A
520-009	42C-10A
520-009	42C-13A
520-009	42C-22A
520-009	42C-24A
520-009	42C-25A
520-009	42C-27A
520-010	42A-16A
520-024	64A-5
520-025	61-1V
520-039	41-6
520-043	69-13N
520-045	64-48
520-046	72-11
520-046	72-25
520-046	72-43
520-056	14-46A
520-056	15-38A
524-145	51-80A
544-710	64-25
544-827	64-51
548-082	42A-17
548-190	42-31
548-190	42A-12A
548-190	42B-27
548-190	42C-27
548-262	69-19
548-330	42-6
548-343	42-8
548-343	42A-8
548-365	42B-23
548-365	42C-23
548-435	42-32
548-435	42B-28
548-853	69-66
548-868	42-2
548-885	70-28
548-914	46-78
550-556	42-7
550-556	42A-7
550-556	42B-7
550-556	42B-25
550-556	42C-7
550-556	42C-25

Part Number	Figure and Index No.
551-035	46A-5
551-037	46-4
551-037	50-1
551-043	46A-4
551-424	41-26
551-606	24-47
551-609	27-47
551-659	24-47
551-725	27-49
551-725	29-1
551-770	27-50
551-770	28-1
551-792	24-49
551-792	25-1
551-846	53-20
551-846	53-43
551-846	53-43
551-873	46-83
551-890	46-83
552-201	67-2A
552-605	56-1
552-615	56-1
553-229	11-65A
553-266	13-14A
553-266	19-32
553-570	61-1P
553-571	61-1K
553-891	24-38
554-051	51-31
554-324	78-24
554-325	78-25
554-350	51-30
554-375	64-11
554-487	64-12
554-552	34-33
554-552	43A-5
554-552	44-6
554-567	46-49
554-568	46-48A
554-575	43A-15
554-575	45A-4
554-575	45A-7
554-575	45A-62
554-575	52-12
554-575	65-25
554-593	42B-31
554-593	42C-30
554-639	53-51
554-640	65-21
554-678	43A-19
554-678	75-5
554-678	75-9
554-678	75-16
554-701	46-46
554-707	63-47A
554-715	68-15
554-720	79-7
554-734	27-43

Part Number	Figure and Index No.
554-735	27-35D
554-735	66-24
554-757	51-50
554-761	66-3
554-764	74-22
554-772	47-21
554-772	64-39
554-775	44-14
554-775	46A-36A
554-775	66A-11
554-793	43-14
554-793	53-65
554-839	64-23
554-839	64-41
554-845	51-28B
554-845	66A-13
554-845	66A-14
554-859	47-22
554-859	64-20
554-861	31-45
554-861	45-28
554-861	45-69
554-861	45A-87
554-865	64A-15
554-881	46-47
554-881	46-50
554-883	46-41
554-885	64-24
554-888	43-17
554-888	43A-41
554-952	74-23
554-953	45-27
554-953	45A-29
554-953	45A-57
554-955	74-24
554-955	78-23
554-957	75B-14
554-979	26-25
554-979	55-29
554-979	57-6
554-979	58-46
554-979	59-8
554-979	61-23
554-985	43-13
554-992	47-20
555-411	45-58
555-411	45A-15
555-411	45A-90
555-815	51-28
555-846	46-42
556-105	45-2
556-753	69-62
557-111	69-68
557-111	69-68
557-122	70-25
557-337	69-1A
557-449	68-2
557-564	46-36

NUMERICAL INDEX

Part Number	Figure and Index No.
557-580	46-79
557-580	46A-28
557-903	46A-19
558-010	26-42
558-300	37-3C
558-779	46-29
558-779	46A-22
558-807	45A-82
558-826	63-29
558-900	43-9
558-913	43-19
558-913	43A-16
558-913	43A-43
559-030	42A-19
559-031	75A-7
559-068	66A-8
559-537	42-1
560-775	43A-3
560-878	43A-17
560-987	44-12
560-987	44-25
561-012	66-21
561-012	66-23
561-013	66-22
561-013	66-22
561-013	66-39
561-020	46A-16
561-027	70-19D
561-027	71-1B
564-860	41-26
564-862	38-29
564-862	39-13
564-867	38-29A
564-867	39-13A
564-867	41-16A
564-868	41-16
564-876	38-29A
564-876	39-13A
564-876	41-16A
564-878	38-29
564-878	39-13
564-879	41-16
564-888	41-16B
564-889	41-16B
565-236	52-3
565-248	52-2
565-323	69-41
565-374	78-26
565-375	42-19B
565-375	42A-22D
565-426	66-15
565-455	46A-18
565-903	52-1
566-227	66-14
566-256	66-19
566-257	66-18
566-326	52-1A
566-334	66A-2

Part Number	Figure and Index No.
566-342	66A-3
566-427	46A-20A
566-528	44-1
571-136	37-6C
571-136	37-13D
571-140	63-51
571-162	65-28
571-162	70-5
571-162	74-15
571-192	70-27
572-525	37-4A
572-557	78-4
572-561	78-4B
572-571	14-64A
572-582	37-6A
572-592	78-4C
572-593	78-4A
572-610	37-13B
572-634	78-11A
572-636	70-24
572-662	37-14A
581-330	62-7
581-332	62-8
581-489	15-35
581-587	69-22
581-605	46A-13B
581-657	73-14
581-657	73-26
581-657	73-28
581-657	73-29
581-657	73-30
581-657	73-38
581-657	73-39
581-657	73-44
581-657	73A-10
581-657	73A-16
581-657	73A-21
581-657	73A-33
581-657	73A-34
581-657	73A-36A
581-657	73A-41
581-657	73A-42
581-657	73A-45
581-657	73A-46
581-657	73A-50
581-657	73A-51
581-657	73A-52
581-760	5-24
581-760	6-23
581-760	20-28
581-760	21-17
581-760	22-12
581-928	17-40
582-587	48-12
582-692	37-15B
583-581	81-49
583-582	81-20
584-017	56-40

Part Number	Figure and Index No.
584-149	70-7
584-195	69-13J
584-256	66-22A
584-256	66-22A
584-256	66-39A
584-257	66-23A
584-257	66A-4
584-258	66-21A
584-278	69-63
584-278	70-18
584-279	69-63
584-279	70-19
584-280	75B-16
584-291	69-61
584-291	70-21B
584-315	69-61
584-315	70-21B
584-350	56-40
584-402	15-77
584-402	34-4
587-189	64A-7
587-221	15-33
587-299	38-8
587-381	14-21
587-384	46-19C
587-398	14-15
587-440	43A-32
587-654	11-25H
587-690	45-50
587-690	79-3
587-726	46-3
587-741	46A-7
587-742	46A-6
587-847	63-22
587-903	74-4
588-362	70-14A
588-464	70-14
588-469	46-45
588-469	46A-29
588-731	79-5
589-688	67-10
592-633	67-12
592-683	38-40A
594-016	34-7B
594-016	34-20B
596-778	69-60B
597-257	79-12
598-395	19-18E
598-395	19-26A
598-395	19-27A
598-395	19-33A
598-395	41-25A
598-599	42B-20
598-599	42C-20
599-179	69-13H
599-282	42-9
599-282	42A-9
599-495	3-3C

Part Number	Figure and Index No.
599-515	79-1
599-534	42-14
599-535	42-13
599-537	42A-1
599-539	42A-14
599-542	42-4
599-542	42-28
599-543	42-12
599-543	42A-16
599-549	42-30
599-549	42A-6
599-549	42B-6
599-549	42B-24
599-549	42C-6
599-549	42C-24
599-563	42A-15
599-564	42-29
599-592	46-84
599-592	46A-36
599-593	43A-28
599-594	46-78
599-594	46A-31
599-599	72-26A
599-608	61-1S
600-103	42A-2
600-103	42B-2
600-103	42C-2
601-703	41-5
602-005	41A-3
602-014	41A-2
602-015	41A-2
602-016	41A-2
602-017	41A-2
602-022	41-4
602-200	42A-4
602-200	42B-22
602-201	42C-14
602-210	42C-17
602-211	42C-15
602-212	42B-18
602-212	42C-18
602-215	42B-14
602-216	42B-15
602-217	42B-17
602-230	42B-4
602-230	42C-4
602-230	42C-22
602-258	42B-16
602-258	42C-16
602-260	42B-19
602-260	42C-19
602-275	67-14
603-300	42A-16B
603-314	51-87A
603-314	51-88C
603-320	40-8A
603-333	11-25G
603-335	9-36A

NUMERICAL INDEX

Part Number	Figure and Index No.
603-337	56-8C
603-337	79-16
603-344	63-19B
603-347	11-25F
603-347	16-11
603-347	17-23D
603-349	45-36C
603-349	45A-51
603-374	80-2C
603-401	69-69
603-500	66-37
609-612	55-33A
620-629	2-33A
651-556	66-34
651-673	79-1
652-349	44-1
652-409	73-7
652-409	73A-13
653-623	78-1D
653-631	72-21
653-631	72-29
653-633	72-36A
653-640	37-10
653-643	37-16
653-658	51-31
654-001	64-37
654-001	67-11
654-047	53-62
654-049	53-61
654-086	45-11
654-099	27-44D
654-160	64-38
654-160	64-38A
654-168	66A-12
654-177	64A-16A
654-186	44-3
654-211	64A-2
654-212	79-11
654-447	71A-12
654-491	72-8A
654-492	72-10A
654-493	72-9A
654-506	72-24
654-506	72-35
654-508	72-18
654-508	72-33
654-512	72-19A
654-531	74-4A
654-534	74-5A
654-557	54-16
655-100	17-34B
655-100	41-28A
656-108	81-53
656-245	81-60
656-257	81-55
656-264	81-40
656-265	81-40
656-273	81-59

Part Number	Figure and Index No.
656-279	81-49A
656-280	81-20A
656-326	81-33
656-343	81-38
656-347	81-59
656-348	81-55
656-365	81-61
656-366	81-38
680-755	24-14
683-208	63-1D
683-291	81-31
683-294	81-32
683-298	81-34
683-315	75A-25
683-315	81-60
683-385	81-15
683-501	72-1A
683-503	72-12A
685-503	19-18C
686-086	69-65
686-202	54-19
686-203	54-19A
686-207	38-39B
686-208	38-40
686-813	69-13C
686-814	69-13D
686-814	69-60A
686-815	69-13A
686-816	69-13B
686-816	69-60A
686-820	69-30
686-820	74-2
687-210	9-76E
687-703	66-3
687-924	30-24
688-178	14-51D
688-178	15-61D
688-178	70-1
688-235	74-5
688-289	61-1M
688-296	70-19A
688-296	71-1
688-296	71A-3
688-296	74-4
688-297	71A-2
688-298	65-22
688-298	71A-4
688-298	71A-4
688-298	74-5
688-374	37-15A
688-425	67-9
688-437	48-20A
688-437	48-21A
688-437	48-22A
689-064	67-2D
689-106	67-10
689-970	79-1A
690-033	66-13

Part Number	Figure and Index No.
690-605	14-46D
690-609	2-59A
690-609	6-24A
690-609	9-76D
690-609	13-15B
690-609	13-16B
690-609	13-29B
690-609	14-28A
690-609	15-75G
690-609	19-30C
690-609	19-31B
690-609	21-4A
690-609	22-11A
690-609	23-68A
690-609	23-69A
690-609	23-72
690-609	26-29A
690-609	26-31A
690-609	26-33B
690-609	27-15A
690-609	27-43B
690-609	27-44B
690-609	27-45B
690-609	30-27B
690-609	31-52B
690-609	31-54A
690-609	32-20A
690-609	34-31A
690-609	43A-25
690-609	43A-33
690-609	43A-36
690-609	44-23B
690-609	44-24B
690-609	45-52
690-609	45A-18
690-609	45A-59
690-609	46-11
690-609	46-33B
690-609	46A-19E
690-609	47-22B
690-609	51-71
690-609	51-80
690-609	51-86A
690-609	51-87C
690-609	51-88D
690-609	51-95A
690-609	53-19B
690-609	53-54A
690-609	53-59A
690-609	56-27A
690-609	56-27C
690-609	56-28A
690-609	56-29D
690-609	56-42E
690-609	58-49A
690-609	58-53A
690-609	58-55B
690-609	60-3C

Part Number	Figure and Index No.
690-609	61-13C
690-609	61-29A
690-609	63-50D
690-609	64-27B
690-609	65-11B
690-609	68-8A
690-609	73A-62B
690-609	79-6
690-611	2-29A
690-611	2-30A
690-611	14-16A
690-611	14-59D
690-611	19-23A
690-611	19-24A
690-611	19-25A
690-611	19-29
690-611	19-34A
690-611	20-25A
690-611	20-26A
690-611	23-15A
690-611	23-60A
690-611	24-40A
690-611	24-43A
690-611	26-32A
690-611	26-34
690-611	27-35A
690-611	31-53A
690-611	40-9A
690-611	41-12D
690-611	47-11B
690-611	48-4C
690-611	55-35B
690-611	55-37A
690-611	55-42A
690-611	56-12A
690-611	56-32A
690-611	56-33A
690-611	56-35A
690-611	56-56A
690-611	61-12A
690-611	63-23B
690-611	64-26A
690-611	64A-8
690-611	68-15B
690-611	68-30A
690-611	69-2B
690-611	69-3B
690-611	75-18B
690-611	76-18A
690-612	2-41A
690-612	2-42A
690-612	5-21A
690-612	5-22A
690-612	6-24B
690-612	8-6G
690-612	11-35D
690-612	13-15A
690-612	13-16A

NUMERICAL INDEX

Part Number	Figure and Index No.
690-612	15-21D
690-612	16-12A
690-612	17-21A
690-612	17-34A
690-612	19-30A
690-612	19-31A
690-612	19-38A
690-612	19-44A
690-612	23-16B
690-612	23-25A
690-612	23-53A
690-612	23-54A
690-612	23-61A
690-612	23-61D
690-612	23-71
690-612	26-33A
690-612	26-53A
690-612	26-56A
690-612	30-11A
690-612	30-26B
690-612	30-28A
690-612	31-58A
690-612	31-60A
690-612	32-7A
690-612	32-8A
690-612	32-21A
690-612	32-22A
690-612	32-23A
690-612	34-31A
690-612	34-31A
690-612	38-36A
690-612	38-37A
690-612	39-18A
690-612	39-19A
690-612	44-14B
690-612	46-33A
690-612	46A-15B
690-612	46A-19D
690-612	47-9A
690-612	47-14C
690-612	47-15C
690-612	48-6C
690-612	48-12C
690-612	48-13A
690-612	48-14A
690-612	48-17A
690-612	48-18C
690-612	51-83A
690-612	51-85A
690-612	51-88B
690-612	51-94
690-612	53-55A
690-612	54-12A
690-612	54-22B
690-612	55-9A
690-612	55-32A
690-612	55-38A
690-612	55-39B

Part Number	Figure and Index No.
690-612	56-29C
690-612	56-42B
690-612	56-54A
690-612	56-55A
690-612	57-13A
690-612	57-22A
690-612	58-14C
690-612	58-40
690-612	58-52B
690-612	58-53B
690-612	59-10A
690-612	59-13A
690-612	61-13B
690-612	61-26A
690-612	61-37A
690-612	62-16A
690-612	64-70
690-612	64A-4
690-612	64A-10B
690-612	65-19B
690-612	66A-15A
690-612	68-28A
690-612	68-29A
690-612	68-31A
690-612	68-32A
690-612	68-33A
690-612	68-34A
690-612	69-1C
690-612	69-12F
690-612	74-29
690-612	75A-5B
690-612	75A-20B
690-612	75B-7B
690-612	75B-11B
690-612	75B-14B
690-612	76-12B
690-612	76-19A
690-613	2-29B
690-613	2-58B
690-613	7-43B
690-613	13-29C
690-613	14-59A
690-613	15-39
690-613	15-65A
690-613	19-28
690-613	23-58B
690-613	23-60B
690-613	23-62A
690-613	23-70A
690-613	24-3B
690-613	24-3E
690-613	24-43B
690-613	26-34A
690-613	27-19B
690-613	27-38A
690-613	29-11
690-613	30-25
690-613	41-23A

Part Number	Figure and Index No.
690-613	41-27A
690-613	48-15B
690-613	56-33B
690-613	62-6A
690-613	64-33A
690-613	64-70C
690-613	75B-6B
690-614	30-9B
690-615	43A-12
690-616	8-6B
690-616	8-29D
690-616	14-65A
690-616	34-24B
690-616	41-12B
690-616	41-21A
690-616	45-31B
690-616	45A-47
690-616	48-10D
690-616	48-16A
690-616	51-73A
690-616	51-76A
690-616	51-83A
690-616	51-92A
690-616	53-46A
690-616	67-13B
690-616	69-30B
690-616	69-38C
690-616	69-43B
690-616	69-60D
690-616	70-11B
690-616	74-25
690-616	75A-21B
690-616	78-1F
690-617	30-9A
690-617	30-10A
690-617	31-55A
690-618	14-39C
690-618	34-7F
690-618	53-32B
690-618	56-31A
690-618	60-5A
690-618	74-26
690-619	2-37A
690-619	2-38A
690-619	9-60A
690-619	9-68A
690-619	15-49A
690-619	23-59A
690-619	27-36A
690-619	30-27C
690-619	51-22
690-619	51-26A
690-619	55-34B
690-619	66-29A
690-620	2-32A
690-620	2-32C
690-620	2-34B
690-620	2-36A

Part Number	Figure and Index No.
690-620	2-40A
690-620	23-73B
690-620	26-28A
690-620	45A-39
690-620	66-25B
690-620	66-26A
690-620	66-27B
690-620	66-28A
690-620	66-30A
690-623	58-41
690-626	46-6C
690-626	46-19A
690-626	46-39A
690-626	46-54A
690-626	46A-14B
690-626	46A-28A
690-628	2-38B
690-628	23-59B
690-628	24-42A
690-628	24-45A
690-628	26-50A
690-628	26-51A
690-628	27-34A
690-628	42-21
690-628	42A-24
690-628	51-22
690-628	51-26
690-628	52-11A
690-628	55-34A
690-628	55-35A
690-628	55-36A
690-628	57-11A
690-628	57-12A
690-628	57-14A
690-628	59-6
690-628	59-11A
690-628	59-12A
690-628	76-14A
690-629	2-32B
690-629	2-34A
690-629	2-35A
690-629	2-39A
690-629	23-56C
690-629	23-57C
690-629	23-73A
690-629	26-55A
690-629	41-27C
690-629	46A-12A
690-629	50-8
690-629	52-10A
690-629	56-32C
690-629	57-24
690-629	59-17
690-629	66-27A
690-630	23-66
690-630	23-67D
690-630	31-57
690-630	31-62

NUMERICAL INDEX

Part Number	Figure and Index No.
690-630	46-54B
690-630	46A-14C
690-630	61-11
690-630	63-43A
690-630	63-44A
690-630	66-31B
690-631	26-52A
690-631	66-8A
690-632	53-48
690-635	52-18A
690-635	53-21A
690-635	53-47A
690-635	53-49A
690-635	53-64A
690-637	16-1L
690-637	49-7E
690-637	49-8E
690-638	69-51B
690-639	14-27
690-639	65-3B
690-639	69-13P
690-639	69-69C
690-639	73-46A
690-639	73A-58A
690-639	78-21G
690-639	80-3
690-640	14-24A
690-640	14-29A
690-640	15-12A
690-640	15-14B
690-640	41A-6
690-640	61-25C
690-640	64-35B
690-640	69-12B
690-640	69-19B
690-640	69-36C
690-640	69-37B
690-642	14-34
690-647	14-43
690-651	45-36B
690-651	45A-50
690-652	23-67A
690-652	80-4
690-653	56-8B
690-660	54-19B
690-660	69-36D
690-660	69-37C
690-660	78-32
690-664	23-55A
690-664	27-41A
690-668	24-51A
690-668	38-7B
690-668	79-18
690-673	28-17B
690-673	69-38B
690-727	7-38
690-727	16-10
690-727	17-23C

Part Number	Figure and Index No.
691-218	45-25A
691-218	45A-71
691-218	45A-78
691-218	45A-80
691-312	24-3D
691-312	27-19A
691-315	24-42
691-315	27-36
691-334	24-43
691-400	42C-13
691-401	42B-13
693-214	66-30
693-612	58-50A
694-002	69-13G
694-004	69-13K
694-006	69-13L
694-020	69-1A
751-201	78-9A
751-202	78-9
751-369	27-8
751-381	78-10
751-489	28-7
751-494	28-3
751-494	28-6
751-772	28-9
751-810	28-12
751-859	43-4
751-889	31-7
752-355	68A-15
752-530	50-4
752-584	33-22
752-585	23-4
752-585	33-24
752-609	68A-50
752-610	68A-55
752-648	23-3
752-830	28-10
752-855	31-16
753-172	31-10
753-381	31-14
753-407	29-10
753-430	29-13
753-437	68A-30
753-462	50-6
753-850	29-16
753-910	43-3
753-910	43A-2
753-939	68A-80
753-944	68A-60
753-956	31-4
754-575	43-1
754-633	46-66
754-761	68A-70
754-804	25-8
754-816	53-15
754-848	33-25
754-895	44-24
754-906	44-4

Part Number	Figure and Index No.
754-909	50-14
755-048	25-4
755-075	78-7
755-076	78-8
755-082	33-6
755-096	78-14
755-101	68A-10
755-146	46A-10A
755-651	50-9
755-882	31-19
755-919	53-17
755-929	28-11
755-930	28-13
755-948	31-5
755-949	31-6
755-950	31-20
755-999	28-8
756-007	25-7
756-008	25-9
756-016	33-8
756-018	33-7
756-117	31-15
756-118	31-17
756-118	33-5
756-284	50-7
756-301	68A-65
756-524	68A-25
756-621	33-9
756-622	33-4
756-667	25-2
756-668	25-5
756-669	50-12
756-685	28-16A
757-208	29-5
757-216	31-11
757-217	31-12
757-318	33-3
757-465	29-4
757-479	33-20
757-480	33-17
757-483	29-3
757-484	29-7
757-580	33-10
757-790	44-19
757-831	25-3
757-831	25-6
757-899	43-11A
757-899	43A-23A
758-093	29-2
758-457	33-12
758-520	28-15
758-534	53-17A
758-558	68A-20
758-563	50-11
758-690	44-2
758-691	44-16
758-696	79-1B
758-733	25-10

Part Number	Figure and Index No.
761-197	29-6
761-197	29-8
761-253	78-6
761-254	78-6A
761-255	78-13
761-256	78-11
761-279	69-58
761-320	50-15
761-323	78-16A
761-744	68A-75A
761-778	65-5
761-778	67-4
761-814	44-20
762-003	78-5
762-024	68A-45
762-128	79-1A
762-275	33-21
762-276	33-18
762-277	33-19
762-426	78-12
762-503	53-16
762-531	33-27
762-585	33-14
762-586	33-13
762-616	78-15
762-681	44-23
762-687	23-5
762-695	33-15
763-063	79-12A
763-310	68A-35
763-417	50-5
763-450	33-11
763-476	46-67
763-476	46A-9
763-728	50-3
763-751	28-2
763-752	28-5
764-533	44-26
764-534	44-7
765-496	44-18
766-508	72-14
766-508	72-27
766-512	72-2
766-513	72-8
766-513	72-9
766-513	72-10
766-519	72-17
766-519	72-31
766-520	72-5
766-521	72-4
766-522	72-3
766-523	72-6
766-524	72-7
766-525	72-20
766-525	72-30
766-528	72-13
766-528	72-28
766-529	72-15

NUMERICAL INDEX

Part Number	Figure and Index No.
766-530	72-16
766-530	72-19
766-530	72-23
766-530	72-36
766-530	72-37
766-530	72-38
766-530	72-39
766-530	72-40
766-530	72-41
766-530	72-42
766-531	72-22
766-536	72-32
766-537	72-34
766-712	79-13
766-795	42B-1
766-795	42C-1
767-203	68A-5
923-384	66-43

Part Number	Figure and Index No.

Part Number	Figure and Index No.

Part Number	Figure and Index No.

THIS PAGE INTENTIONALLY LEFT BLANK

GRIDS 2K4 THRU 2L24
INTENTIONALLY BLANK